ROCKWELL SOFTWARE

PARAGON
Consulting Solutions

ACP
AUTORIDAD DEL CANAL DE PANAMÁ

ENHANCED MODEL v2.0

USER'S MANUAL

SIMULATION MODEL OF PANAMA CANAL VESSEL TRANSITS

September, 2004

Revision 0

Table of Contents

1 Introduction 4
1.1 The Panama Canal Simulation Model 4
1.2 Panama Canal Model Objectives 4
1.3 Objective of the Users Manual 4
1.4 Features of the Enhanced Model Version 2.0 5
1.5 Simulation System Concept 6
1.6 System Overview 7
1.6.1 Inputs 7
1.6.2 Outputs 8
2 Vessel Arrival Mix 8
2.1.1 General Vessel Attributes 8
2.1.1.1 Market Segment and Direction of Travel 9
2.1.1.2 Size Range 9
2.1.1.3 Ballast and Laden Status 10
2.1.1.4 Booking Status 10
2.1.2 Specific Vessel Attributes 11
2.1.2.1 Specific Dimensions, Draft and Tonnage 11
2.1.2.2 Operational Identifiers 11
2.1.2.3 Arrival and Ready Time 12
2.1.2.4 Vessel Transit and Lockage Times 12
2.1.2.5 Canal Waters Time Calculation 13
3 Traffic Rules 14
3.1.1 Restriction Code 14
3.1.1.1 Restriction Code Definitions 15
3.1.1.2 Restriction Code Assignment 16
3.1.2 Precaution Designator (PD) 17
3.1.2.1 PD Listing 17
3.1.2.2 PD Assignment 17
3.1.3 High Mast Lighting (HML) 18
3.1.3.1 HML Codes 18
3.1.3.2 HML Evaluation 18
3.1.4 Other Rules and Restrictions 19
3.1.4.1 Underkeel Clearance 19
3.1.4.2 Pilots and Line-handlers 19
3.1.4.3 Tugs Requirements 19
3.1.5 Lock Crew Requirements 23
3.1.5.1 Sunrise and Sunset Times 25
3.1.5.2 Fog 25
3.1.5.3 Scheduled and Unscheduled downtimes 26
3.1.5.4 Vessels Allowed to Perform Relay Operation at the Locks 26
3.1.5.5 Locks Operating Modes 26
3.1.5.6 Tandem Operation 28
4 Vessel Sequencing 29
4.1.1 Preliminary Sequence 29
4.1.2 Assigning vessels to priority queues based on vessel restriction code 30

4.1.3 The Pre-sequencing Logic 30
4.1.3.1 At the Panamax Canal 30
4.1.3.2 At the Post-panamax Canal 34
4.1.3.3 The Pre-sequencing Outputs 35
4.1.4 The Sequencing Logic 35
4.1.4.1 At Every Midnight 35
4.1.4.2 Real-time Sequencing 40
4.1.4.3 Maximum Waiting Time at Outer Anchorages 43
4.1.4.4 The Booking System 43
4.1.4.5 Prioritizing vessels that belong to the same queue 45
4.1.5 Preliminary versus Simulated Sequence 45
5 Validation and Verification of the Panama Canal Vessel Transits Simulator 46
5.1 Verification and Validation of the Panamax Canal with historical data of 2002 46
5.2 Verification of the Post-Panamax Canal with hypothetical data for year 2015 49
6 Animation 51
7 Definitions 52
Vessel Categories 53
8 Appendixes 54

1 Introduction

1.1 The Panama Canal Simulation Model

In early 2003, the ACP contracted a team from Rockwell Software and PARAGON, hereon referred to Rockwell/Paragon to develop a computer simulation model of the Panama Canal Vessel Transit Operations for testing future Canal configurations, demand patterns and operating rules.

Along with information gathered, our team added simulation, logistics and naval knowledge, in order to deliver a feasible, flexible and successful tool in due time.

1.2 Panama Canal Model Objectives

The ACP has decided that the development of an operational simulation of canal operations is a critical component of the Master Planning process, in order to assess and compare alternatives in an objective, measurable and replicable fashion.

This simulation model shall be used as a planning tool in order to assess the system's capacity and level of customer service under different marketing strategies, Canal configuration and operating rules.

1.3 Objective of the Users Manual

In this third phase of the model's development Rockwell/Paragon designed, developed and delivered the complete Enhanced Simulation Model of Panama Canal Vessel Transit Operations, version 2.0, from now on summarily referred to as the Enhanced Model v2.0. The Enhanced Model v2.0 is be based on the Enhanced Model v1.0, approved on September 17, 2004, but additionally includes enhancements and modifications necessary to address specific questions and scenarios required for the development of the Master Plan. Other than these enhancements and modifications, the Enhanced Model v2.0 must provide the same functionality as the Enhanced Model v1.0.

This Manual explains the premises and the modeling strategy adopted as well as the features of the Enhanced Model v2.0.

1.4 Features of the Enhanced Model Version 2.0

The following enhancements were implemented in the Enhanced Model v2.0 during this third phase of model development:

- Possibility of generating vessels that would only be allowed to meet opposite traffic in the Gaillard Cut during the day. These vessels are identified with the Clear Cut at Night (CCNT) restriction code;
- Possibility of allowing restricted vessels to face opposite traffic of selected regular vessels at the Gaillard Cut. These vessels are identified with the Small Vessel (SV) restriction code;
- Creation of a Schematic Animation of the Canal to ease visualization and fine tuning of model behavior (locks, navigation channels, tie-up stations, and anchorages).

Other than these, the Enhanced Model v2.0 inherit from version 1.0:

- Possibility of generating logs of a complete simulation run and for all iterations;
- Introduction of a warm-up period and setup of the beginning day of the simulation through the Excel User Interface;
- Calculation of CWT (Canal Waters Time) for booked vessels based on the ACP new criteria;
- Utilization of pure FIFO (First-in First-out) rule for selecting vessels for entering the Canal;
- Possibility of allowing real-time vessel sequencing for entering the Canal;
- Insertion of Panamax Plus Restriction Code for Panamax Plus (PCC) vessels;
- Possibility of making some Post-panamax vessels behave as channel restricted vessels (PCCHDL, PDLCCH);
- Possibility of extending the Gaillard Cut for Post-panamax vessels up to buoy 79;
- Utilization of different navigation and lockage times based on vessel's block coefficient;
- Detailed simulation of lock lane outages;
- Introduction of a Medium restricted queue length upper bound in the Pre-sequencer;
- Estimate of tug requirements and counter of number of ships that lock per shift.

1.5 Simulation System Concept

The simulation system design can be represented by the following diagram:

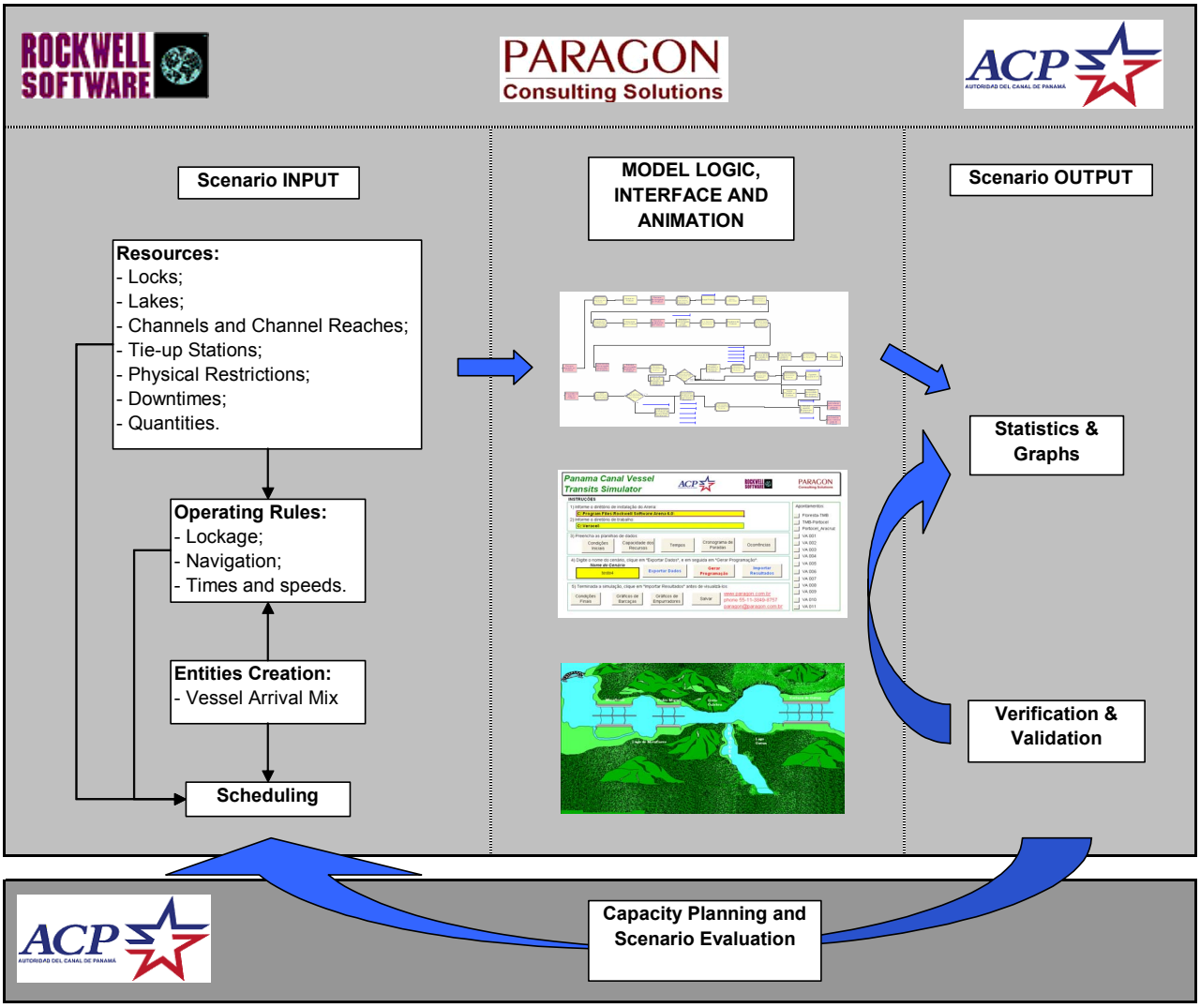

Through an Excel spreadsheet the user inputs all the parameters necessary to run the model. The parameters are then read by the model, which runs and exports the outputs to access database files and to an Excel User Interface.

Access databases record all the outputs which are loaded into the User Interface.

1.6 System Overview

1.6.1 Inputs

The inputs and the model structure itself is divided into three main parts:

- Vessel Arrival Mix;
- Traffic Rules;
- Vessel Pre-sequencing.

At the beginning of the simulation run, the model calculates the Time Between Arrivals of the vessels per Market Segment both for the Northbound and Southbound traffic on a monthly basis either based on historical or on forecasted demand. The main attributes will follow a sequence and be assigned to the vessels through a mix of rules and theoretical distributions.

The traffic rules were mainly created with focus on assuring safe crossings through the Canal. They are designated based on the canal and locks configurations, traffic restrictions, pilots experience and vessel characteristics, among others. They drive operating behavior and scheduling procedures. Restriction Codes, Precaution Designator and High Mast Lighting assignment rules are deeply explained, as well as other important aspects related to traffic, namely: fog probability, scheduled and unscheduled downtimes, locks operating modes and the way traffic lanes are chosen.

The vessel pre-sequence routine (Pre-sequencer), is a simplified logical way to mimic the actual scheduling process presently carried out by the Scheduler every morning. Its main goal is to make best use of the Canal resources in a safe manner, overcoming constraints and attending rules, while striving to increase the system's throughput.

The Pre-sequencer is a MS Excel spreadsheet that suggests the vessels underway times from the Pacific and Atlantic Anchorages as well as from the Gatun Anchorage, based on possible combinations of parameters mentioned above and on the ships restriction codes. It was made separated from User Interface, though can be easily accessed from it.

The user has access to a number of variables, like transit and lockage times, assignment rules of Restriction Codes, HML and PD, length of simulation, locks and canal operating modes, theoretical vessel arrival mix, a list of typical vessels. All aiming to enable the user to test and analyze different canal configurations, rules, restrictions and demand patterns. Additionally, throughput (Canal Waters Time), resources utilization and queue lengths will be recorded for comparing different scenarios.

Once the user has configured the model in order to evaluate a certain scenario, the model should then be run and the outputs imported through the user interface. The way to operate the system itself is detailed in the Enhanced Model User's Guide.

1.6.2 Outputs

Through the output tables, the user is able to access averages and standard deviation of the key performance parameters obtained from the simulated scenario, aggregated per year, per month, and per transit for ships heading southbound and northbound:

- Canal Waters Time per Restriction Code, monthly and yearly averages;
- In-transit Time per Restriction Code, monthly and yearly averages;
- Waiting Times at anchorages and tie-ups, monthly and yearly averages;
- Billing Tons per Market Segment and totals per month and year;
- # of Transits per Market Segment and totals per month and year;
- Locks Occupation;
- Queue Length before the main resources (see User's Guide).

Yearly results can be accessed in the Yearly Reports section of the output screens, the monthly results, in the Monthly Reports section and the transits data, in the per Transits section of the user interface map, called Sail Through.

Note that the standard deviation will only be calculated in case more than one replication is run.

For further details concerning the outputs, please refer to the User's Guide.

The main parts of the Conceptual Model, are further detailed next.

2 Vessel Arrival Mix

The vessel arrival mix refers to the number of vessels per category that arrive for transit to the Canal northbound and southbound in any given day, being it based on random and/or discrete patterns.

2.1.1 General Vessel Attributes

The first vessel attributes are general, and are meant to balance the generation of vessels according to either historical or forecasted distributions. The general vessel attributes are:

2.1.1.1 Market Segment and Direction of Travel

These are the first attributes assigned to the vessel, and are based on either historical data or market forecast. The Market Segments considered by the model and their respective internal indexes are:

#	Market Segment
1	Container
2	Dry Bulk
3	General Cargo
4	Others
5	Passengers
6	Refrigerated
7	Tankers
8	Vehicle Carriers

Market Segment and respective internal indexes.

A traffic trend curve of the Yearly number of transits per Market Segment and their correspondent monthly Seasonal Index must be input by the user for each year of the simulation run. The user must also mention how much of the traffic will be heading north/southbound.

The Monthly number of transits for each direction is obtained by multiplying the total number of transits for each specific year per the Seasonal Index and for each Market Segment. The Time-Between-Arrivals (TBA) of vessels at each side of the canal is then obtained per day in accordance.

The determination of the number of transits per year, month and day is the first thing the model does. Once the ships have been created, they enter the ready-for-transit-time (priority) queues for scheduling. The premises that will be considered for assigning the remaining vessel characteristics are described below.

2.1.1.2 Size Range

Once a vessel is assigned a market segment and a direction of travel, a size range, which is a combination of Length and Beam Ranges is designated to the vessel according to a probabilistic distribution per market segment, pre-determined by the user.

The user can set up to 16 (sixteen) Length Ranges and up to 30 (thirty) Beam Ranges, resulting in up to 480 (four hundred and eighty) Size Ranges.

Below is an example of Size Ranges Table created based on Beam and Length Ranges pre-determined by the user:

Range #	Range	#	Limits	#	Limits
1	1-1	1	25 - 30	1	100 - 200
2	1-2	1	25 - 30	2	200 - 300
3	1-3	1	25 - 30	3	300 - 400
4	1-4	1	25 - 30	4	400 - 500
5	1-5	1	25 - 30	5	500 - 570
6	1-6	1	25 - 30	6	570 - 600
7	1-7	1	25 - 30	7	600 - 700
8	1-8	1	25 - 30	8	700 - 800
9	1-9	1	25 - 30	9	800 - 900
10	1-10	1	25 - 30	10	900 - 1000
11	1-11	1	25 - 30	11	1000 - 1100
12	1-12	1	25 - 30	12	1100 - 1200
13	1-13	1	25 - 30	13	1200 - 1300
14	1-14	1	25 - 30	14	1300 - 1400
15	1-15	1	25 - 30	15	1400 - 1500
16	1-16	1	25 - 30	16	1500 - 10000
17	2-1	2	30 - 35	1	100 - 200
18	2-2	2	30 - 35	2	200 - 300
19	2-3	2	30 - 35	3	300 - 400
20	2-4	2	30 - 35	4	400 - 500
21	2-5	2	30 - 35	5	500 - 570
22	2-6	2	30 - 35	6	570 - 600
23	2-7	2	30 - 35	7	600 - 700

Sample List of Size Ranges

2.1.1.3 Ballast and Laden Status

After a market segment, direction of travel, and size range is assigned to the vessel generated she is assigned a ballast or laden status based on a probabilistic distribution per market segment and direction of travel, since some market segments have a significant tendency to travel loaded in one direction and in ballast in the other. The Draft Status determines the actual draft of the vessel, read in the Table of Typical Vessels that will be further explained on item 2.2 of this manual.

2.1.1.4 Booking Status

Finally, the vessel is assigned a booking status based on a probabilistic distribution per market segment and direction of travel, because some market segments have a significant tendency to travel loaded in one direction and in ballast in the other, and vessels rarely book when in ballast. Since there is a finite number of booking “slots” per size range, the vessel’s booking status should also be subject to the availability of booking slots.

2.1.2 Specific Vessel Attributes

Attributes inherent to the vessels, namely ***Specific Vessel Attributes***, are described next.

2.1.2.1 Specific Dimensions, Draft and Tonnage

Once the general vessel attributes are determined, the model "looks up" a vessel in the ***Table of Typical Vessels*** based on the probability of occurrence of each vessel belonging to the Size Range chosen. Also from that table, specific vessel characteristics are retrieved:

- Specific Length;
- Specific Beam;
- Specific Draft depending whether the vessel is in ballast or laden.
- Specific Billing Tonnage (PC/UMS).

Below is listed part of the Table of Typical Vessels:

Internal No.	NAME	Market Segment	LR#	BR#	SR#	Length	Beam	Laden Draft	Ballast Draft	PCUMS	ACP I.N
1	18 DE MARZO	Tankers	7	17	263	680.54	105.94	Tria(36.34, 37.92, 39.50)	26.67	25201	202312
2	550--1	Others	5	10	149	501.25	74.08	Tria(26.58, 26.58, 26.58)	17.22	9370	3002213
3	550--1	Others	5	10	149	501.25	74.08	Tria(22.75, 22.75, 22.75)	17.22	9370	3002328
4	AALSMEERGRACHT	General Cargo	4	8	116	425.85	62.11	Tria(30.25, 30.25, 30.25)	17.87	6429	332585
5	ABAVA	Refrigerated	4	8	116	408.46	63.06	Tria(22, 22, 22)	18.75	5208	329436
6	ABRA	Dry Bulk	5	12	181	526.18	80.84	Tria(20.92, 20.92, 20.92)	19.10	11974	740519
7	ABSALON	Others	7	12	183	604.82	83.19	Tria(27.92, 31.36, 33.75)	20.36	15316	268968
8	ACACIA N	Dry Bulk	5	12	181	524.39	80.78	Tria(22.25, 30.76, 33.67)	20.91	11810	787434
9	ACTIVE	Dry Bulk	4	9	132	420.08	69.65	Tria(24.5, 25.38, 26.25)	17.84	6700	809900
10	JOYOUS LAND	Dry Bulk	8	17	264	738.12	105.77	Tria(38.42, 38.83, 39.25)	27.71	29707	792691
11	ACHILLES	Dry Bulk	8	17	264	738.19	105.77	Tria(37.17, 38.58, 39.33)	22.77	30618	771694
12	ACHTERGRACHT	General Cargo	4	8	116	425.85	62.07	Tria(23.17, 23.17, 23.17)	17.87	6611	329622
13	ACTIVE	Dry Bulk	4	9	132	420.08	69.65	Tria(22.92, 25.75, 27.92)	17.84	6700	809900
14	ACUSHNET	Tankers	6	16	246	587.93	99.84	Tria(31.5, 32.67, 33.83)	22.82	18145	736732
15	AD ASTRA	Dry Bulk	8	17	264	738.22	105.91	Tria(39.33, 39.33, 39.33)	28.95	31893	3000287

Exerpt of the Table of Typical Vessels

Even though the Panama Canal vessel population has been used to compose the Table of Typical Vessels presently used by the model, the user might want to reduce the number of vessels per Size Range by choosing fewer "typical vessels" instead of whole the population.

2.1.2.2 Operational Identifiers

After the model characterizes the vessel attributes, the model assigns the vessel operational identifiers, which include the precaution designator (PD), High Mast Lighting (HML), and restriction code (RC). These assignments are based on a mix of probabilistic distributions and rules based on vessel characteristics. For further information, please refer to the User's Guide.

2.1.2.3 Arrival and Ready Time

The vessel arrival time is assigned to the vessels upon arrival. The vessel interarrival times are associated to the number of transits that are to flow through the Canal in each specific month. For simplification purposes, the ready-time is equal to the arrival time.

The user might change the Vessel Interarrival Distribution among the following options:

#	TBA Distribution
1	Deterministic
2	Erlang (k=2)
3	Erlang (k=3)
4	Erlang (k=4)
5	Normal
6	Exponential
7	Uniform
8	Triangular

Vessel Interarrival Probabilistic Distributions and respective internal indexes.

The coefficient of variance of the curves can also be changed.

2.1.2.4 Vessel Transit and Lockage Times

The historical transit and lockage times are both dependent upon the Canal resources characteristics, transit restriction rules and on the vessel's characteristics. Once a vessel is chosen, she is assigned transit and lockage times depending on her draft, beam and block coefficient.

The table of Transit and Lockage times are input by the user through the interface.

For further details about the transit and lockage times, please refer to the User's Guide.

2.1.2.5 Canal Waters Time Calculation

Read next a description of how the Canal Waters Time is calculated by the model based on the ACP criteria:

- Booked vessels are given a ready time based on their booking date and their type of restriction. The booking date for booked vessels is set as being always equal to the day the vessels start their transit. The model therefore considers that a booked vessel may not miss her booking date. The new ready time is then calculated based on this booking date and the CWT calculated depending on whether the vessel is restricted or not.

- Restricted booked vessels: restricted booked vessels are given a ready time equal to 00:00 (12:00 AM) of the day they are booked for transit.

- Non-restricted booked vessels: if a non-restricted booked vessel enters the Canal after 12:00 (12:00 PM) of the day she is booked for transit, she will still be given a ready time equal to 12:00 (12:00 PM) of the transit day. On the other hand, if the vessel enters the Canal before 12:00 (12:00 PM) of the day she is booked for transit, meaning that an available bucket was assigned to this vessel, the vessel will be given a ready time equal to the vessel's underway time.

3 Traffic Rules

The traffic rules were mainly created with focus on assuring safe crossings through the Canal. They are designated based on the canal and locks configurations, whether restrictions, pilots experience and vessel characteristics, among others. They drive operating behavior and scheduling procedures.

3.1.1 Restriction Code

The Restriction Codes define how restricted is vessel traffic and is basically dependent upon the vessel's dimensions, the market segment to which she belongs, the precaution measures taken in order to guarantee a safer transit and whether the vessel has approved or denied High Mast Lighting.

3.1.1.1 Restriction Code Definitions

The Restriction Codes meanings have great impact in the model logic and therefore can only be changed with technical assistance.

The following Restriction Codes and respective meanings are considered by the model and pre-sequencer. The Restriction Codes are determined by the Model based on a combination of vessel attributes named *restriction*, *sub-restriction* and *restch*. The *sub-restriction* attribute distinguishes the ordinary regular vessels (NRs) from SVs and CCNTs, while the *restch* attribute determines whether the vessel is channel restricted or not, which only applies to Post-panamax vessels.

Level of Restriction	Long Name	Restriction Code	Index in the Pre-sequencer	Attribute Names in the Model			Description
				restriction	sub_restriction	restch	
1	Small Vessel	SV	5	1	1	0	Can transit the canal with no restriction. Does not impede larger vessels of any kind to transit in the opposite direction at any part of the Canal.
2	Regular	NR	5	1	0	0	Can transit the canal with no restriction.
3	Clear Cut at Night	CCNT	5	1	2	0	Must not meet opposing traffic in the cut during the night.
4	Combined Beam	CR	4	5	0	0	May only face regular ships in the Cut.
5	Clear Cut	CC	3	2	0	0	Must not meet opposing traffic other than SVs in the cut.
6	Day-light Clear Cut	DLCC	2	3	0	0	Must transit the Cut during daylight hours and not meet opposing traffic other than SVs in the the Cut.
7	Clear Cut Day-light	CCDL	1	4	0	0	Must transits the Cut, arrive and depart the Locks during daylight hours and not meet opposing traffic other than SVs in the Cut.
8	Panamax Plus	PCC	8	8	0	0	Must not meet opposing traffic other than SVs in the cut and use only Post-Panamax Locks.
9	Post-panamax Day-light Clear Cut	PDLCC	6	6	0	0	Must use Post-Panamax Locks.Must transit the Cut during daylight hours and not meet opposing traffic other than SVs in the Cut. May use the locks during the night.
10	Post-panamax Clear Cut Day-light	PCCDL	7	7	0	0	Must use Post-Panamax Locks. Must transit the Cut, arrive and depart the Locks during daylight hours and not meet opposing traffic other than SVs in the Cut.
11	Post-panamax Day-light Clear Cut Clear Channel	PDLCCH	6	6	0	1	Must use Post-Panamax Locks. Must transit the Cut during daylight hours and not meet opposing traffic other than SVs at South Water Access Channels and Cut extension up to buoy 79. May use the locks during the night.
12	Post-panamax Clear Cut Day-light Clear Channel	PCCHDL	7	7	0	1	Must use Post-Panamax Locks. Must transit the Cut, arrive and depart the Locks during daylight hours and not meet opposing traffic other than SVs at South Water Access Channels and Cut extension up to buoy 79.

Restriction Code Definitions

3.1.1.2 Restriction Code Assignment

The user will have to define through the table exemplified below how to assign them to the vessels. Note that a single Restriction Code will be assigned to each vessel.

CODE	Length		Beam		Draft		HML		PD	
	Min	Max	Min	Max	Min	Max	Min	Max	Min	Max
CCDL	0	900	91	95	0	39,51	D	D	Yes	Yes
CCDL	0	900	95	107	0	39,51	D	D	No	Yes
CCDL	900	966	0	107	0	39,51	N	D	No	Yes
DLCC	0	900	95	107	0	39,51	Y	Y	No	Yes
CC	0	900	95	107	0	39,51	C	C	No	Yes
CC	0	900	0	91	0	39,51	N	D	Yes	Yes
CR	0	900	80	91	38,01	39,51	N	D	No	Yes
CR	0	900	91	95	0	39,51	Y	Y	No	Yes
CR	0	900	91	95	0	39,51	D	D	No	No
CR	0	900	91	95	0	39,51	C	C	No	Yes
PCCHDL	0	0	0	0	0	0	N	D	No	Yes
PCCHDL	0	0	0	0	0	0	N	D	No	Yes
PCCHDL	0	0	0	0	0	0	N	D	Yes	Yes
PCCHDL	0	0	0	0	0	0	D	D	No	Yes
PCCHDL	0	0	0	0	0	0	D	D	No	Yes
PDLCCH	0	0	0	0	0	0	Y	Y	No	Yes
PDLCCH	0	0	0	0	0	0	Y	Y	No	Yes
PCCDL	0	0	0	0	0	0	D	D	No	Yes
PCCDL	0	0	0	0	0	0	D	D	No	Yes
PCCDL	0	0	0	0	0	0	D	D	No	Yes
PDLCC	0	0	0	0	0	0	Y	Y	No	Yes
PDLCC	0	0	0	0	0	0	Y	Y	No	Yes
PDLCC	0	0	0	0	0	0	Y	Y	No	Yes
NR	Assign this code to all vessels that do not qualify for any other restriction code									

Restriction Code Assignment Rules Setup Table (dimensions in ft)

The Enhanced model logic, unlike the previous version, allows the user to choose the number of lines per each restriction code to be used for Restriction Code Assignment.

Channel restriction codes (PCCHDL or PDLCCH) for Post-panamax vessels will only be taken into account in case the user establishes through the Main Manu that the model will have to handle channel restrictions, otherwise, PCCHDL and PDLCCH will behave as ordinary PCCDL and PDLCC vessels.

3.1.2 Precaution Designator (PD)

A Precaution Designator is assigned by ACP to the vessels that carry dangerous cargo if precautionary measures need to be taken. It is also taken into account by the Restriction Code Assignment Rule and will be considered as follows.

3.1.2.1 PD Listing

The following table briefly describes the meaning of the Precautionary Designators:

PD	Precaution Measure?	Basic Meaning
1	YES	Precautionary measures due to dangerous cargo that imposes different traffic behavior to the ships that are assigned any of these PD numbers through the association of them to the Restriction Codes setup by the user at the Restriction Code Assignment Rules Setup Table.
2		
3	NO	No precautionary measures due to dangerous cargo.
4		
5		
6		
7		
N		No dangerous cargo.

3.1.2.2 PD Assignment

The precaution measures will partially dictate the traffic restrictions of each vessel and thus their behavior through the Canal waters as per illustrated in the Restriction Code Assignment Rule Setup Table.

See below the table through which the user informs the model how it should assign the PD to a vessel with sample data.

Market Segment	PD
Container	0
Dry Bulk	0
General Cargo	DISC(0.02,1,1,0)
Others	DISC(0.02,1,1,0)
Passengers	0
Refrigerated	0
Tankers	DISC(0.35,1,1,0)
Vehicle Carriers	0

PD Assignment table with sample distributions per Market Segment.

For further details about how PD is assigned to the vessels, please refer to the User's Guide.

3.1.3 High Mast Lighting (HML)

The High Mast Lighting (HML) Code determines whether the vessel can lock during the night or not, for those that need to undergo evaluation. It is also read by the Restriction Code Assignment Rule and will be considered as follows.

3.1.3.1 HML Codes

A vessel can be HML Approved, Denied or be pending inspection as per the list below:

HML Code	Approved	Meaning
Y	YES	Can lock, but not transit the Cut at night
C	YES	Can cross the whole Canal at night
D	NO	Cannot neither lock nor transit the canal at night
M	Pending Inspection	Regarded as denied

3.1.3.2 HML Evaluation

The user will be able to set up through the interface what are the vessels that must undergo HML evaluation by determining the parameters shown in the table below.

CODE	Length		Beam		Draft		PD		Market Segment	
	Min	Max	Min	Max	Min	Max	Min	Max	Min	Max
D	800	965	91	107	0	1000	No	Yes	Container	Vehicle Carriers
D	0	10000	0	107	0	1000	No	Yes	Passengers	Passengers
Inspect.	0	800	91	107	0	1000	No	Yes	Container	Vehicle Carriers
N	Assign this code to all vessels that do not qualify for any other restriction code									

HML Assignment Rules Setup Table (dimensions in ft).

Basically, if a vessel is not denied, based on the criteria stated, she must follow inspection. If she still does not match the criteria that determines whether the vessel must undergo evaluation, the vessel will not be designated an HML Code.

If the vessel must follow inspection, the model will randomly determine the HML based on her market segment as per the table exemplified below.

Market Segment	HML Distribution
Container	DISC(0.092, 2, 0.292, 4, 1,
Dry Bulk	DISC(0.113, 2, 0.287, 4, 1,
General Cargo	DISC(0, 2, 0.551, 4, 1, 3)
Others	DISC(0.027, 2, 0.475, 4, 1,
Passengers	4
Refrigerated	1
Tankers	DISC(0.079, 2, 0.504, 4, 1,
Vehicle Carriers	DISC(0.019, 2, 0.495, 4, 1,

HML Distributions for vessels that must undergo inspection.

Note: the exception rules are reflected in the percentages of occurrence of HML Codes Y and C obtained from the historical data, rather than on logic.

3.1.4 Other Rules and Restrictions

3.1.4.1 Underkeel Clearance

Canal water levels are basically dependent upon tides and water availability and define the maximum draft allowed through the Canal Waters, which of course reduces the Canal throughput.

The user does not have to input that information into the model, but rather have to consider that when defining the vessel mix expected. The underkeel clearance will therefore predetermine the demand pattern rather then the canal capacity in the model.

3.1.4.2 Pilots and Line-handlers

Pilots and line-handlers are not considered by the model as restrictions to vessel transit, neither their requirements are calculated. The impact of these resources is somehow reflected in the results in the transit and lockage times loaded in the model.

3.1.4.3 Tugs Requirements

Tugs are not considered by the model as restrictions to vessel transit, meaning that the model uses as many tugboats as needed and where applicable. The impact of tugs as resources is reflected in the results in the transit and lockage times loaded in the model.

The rule established for assigning tugs to vessels is set straight into the model for cost calculation purposes only.

Follows a description of the way Rockwell/Paragon implemented calculation of tug requirements:

- The model considers 5 (five) areas of operation for tugboats:
  - **Balboa;**
  - **Miraflores Lake;**
  - **Gatún;**
  - **Gaillard Cut;**
  - **Pacific Post-Panamax Locks;**
  - **Atlantic Post-Panamax Locks.**

- The model considers 2 (two) fleets of Tugboats:
  - **Type A Tugboats:** for assisting Panamax (or smaller) vessels;
  - **Type B Tugboats:** for assisting Post-Panamax (or smaller) vessels.

- Combining the areas with the types of vessels that can transit in each area, the model calculates tugboat requirements for the following 9 (nine) area-fleets or counters:
  - Balboa Tugs – Type A;
  - Miraflores Lake Tugs – Type A;
  - Gatún Lock Tugs – Type A;
  - Gaillard Cut Tugs – Type A;
  - Gaillard Cut Tugs – Type B;
  - Pacific Post-Panamax Lock Tugs – Type A;
  - Pacific Post-Panamax Lock Tugs – Type B;
  - Atlantic Post-Panamax Lock Tugs – Type A;
  - Atlantic Post-Panamax Lock Tugs – Type B.

- There are 5 (five) places where tug boats assist <u>Northbound vessels that transit through the Panamax Locks are</u>:
  - Entering Miraflores Locks, tugboats are assigned from BY 26 (Pacific) to ENTER MF LOCKS, according to the assignment rule below under PMAX LOCKS-IN, and count toward the BALBOA TUGS – TYPE A area-fleet;
  - Entering Pedro Miguel Locks, Tugboats are assigned from DEPART MF LOCKS to ENTER PM LOCKS, according to the assignment rule below under PMAX LOCKS-IN, and count towards the MIRAFLORES LAKE TUGS – TYPE A area-fleet;
  - Through the Cut, tugboats are assigned from ST 2035 to CHAGRES CROSSING, according to the assignment rule below under PMAX CUT, and count towards the GAILLARD CUT TUGS – TYPE A area-fleet;
  - Entering Gatún Locks, tugboats are assigned from GT ANCHORAGE to ENTER GT LOCKS, according to the assignment rule below under PMAX LOCKS-IN, and count towards the GATUN LOCK TUGS – TYPE A area-fleet;
  - Exiting Gatún Locks, tugboats are assigned from DEPART GT LOCKS to BY 13 (Atlantic), according to the assignment rule below under PMAX LOCKS-OUT, and count towards the GATÜN LOCK TUGS – TYPE A area-fleet.

- There are 5 (five) areas where tug boats are assigned to assist Southbound vessels that transit through the Panamax Locks:
    - Entering Gatún Locks, tugboats are assigned from BY 13 (Atlantic) to ENTER GT LOCKS, according to the assignment rule below under PMAX LOCKS-IN, and count towards the GATUN LOCK TUGS – TYPE A area-fleet;
    - Through the Cut, tugboats are assigned from CHAGRES CROSSING to ST 2035, according to the assignment rule below under PMAX CUT, and count towards the GAILLARD CUT TUGS – TYPE A area-fleet;
    - Entering Pedro Miguel Locks, Tugboats are assigned from ST 2035 to ENTER PM LOCKS, according to the assignment rule below under PMAX LOCKS-IN, and count towards the MIRAFLORES LAKE TUGS – TYPE A area-fleet;
    - Entering Miraflores Locks, tugboats are assigned from DEPART PM LOCKS to ENTER MF LOCKS, according to the assignment rule below under PMAX LOCKS-IN, and count towards the MIRAFLORES LAKE TUGS – TYPE A area-fleet;
    - Exiting Miraflores Locks, tugboats are assigned from DEPART MF Locks to BY 26 (Pacific), according to the assignment rule below under PMAX LOCKS-OUT, and count towards the BALBOA TUGS – TYPE A area-fleet.
- There are 3 (three) places where tug boats are assigned to assist Northbound vessels that transit through the Post-panamax Locks:
    - Transiting the Pacific Post Panamax Locks, tugboats are assigned from BY 26 (Pacific) to DEPART PACIFIC PP LOCKS, according to the assignment rule below under PPMAX LOCKS, and count towards the PACIFIC POST-PANAMAX LOCK TUGS – TYPE A or B area-fleet (according to vessel type);
    - Through the Cut, tugboats are assigned from DEPART PACIFIC PP LOCKS to CHAGRES CROSSING (Panamax or smaller vessels) or BY 79 (Post Panamax vessels), according to the assignment rule below under PPMAX CUT, and count towards the GAILLARD CUT TUGS – TYPE A or B area-fleet (according to vessel type);
    - Transiting the Atlantic Post Panamax Locks, tugboats are assigned from GT ANCHORAGE to DEPART ATLANTIC PP LOCKS, according to the assignment rule below under PPMAX LOCKS, and count towards the ATLANTIC POST-PANAMAX LOCK TUGS – TYPE A or B area-fleet (according to vessel type);

- There are 3 (three) areas where tug boats are assigned to assist Southbound vessels that transit through the Panamax Locks:
    - Transiting the Atlantic Post Panamax Locks, tugboats are assigned from BY 13 (Atlantic) to DEPART PPMAX LOCKS, according to the assignment rule below under PPMAX LOCKS, and count towards the ATLANTIC POST-PANAMAX LOCK TUGS – TYPE A or B area-fleet (according to vessel type);
    - Through the Cut, tugboats are assigned from CHAGRES CROSSING (Panamax or smaller vessels) or BY 79 (Post Panamax vessels) to ARRIVE PACIFIC PPMAX LOCKS, according to the assignment rule below under PPMAX TUGS, and count towards the GAILLARD CUT TUGS – TYPE A or B area-fleet (according to vessel type);
    - Transiting the Pacific Post Panamax Locks. Tugboats are assigned from ENTER PACIFIC PPMAX LOCKS to DEPART PACIFIC PPMAX LOCKS, according to the assignment rule below under PPMAX LOCKS, and count towards the PACIFIC POST-PANAMAX LOCK TUGS – TYPE A or B area-fleet (according to vessel type);

The average and maximum quantity of tugboats per month and shift are recorded into an array for each area-fleet whenever there is a change in state.

Counters were placed at the beginning and at the end of each area assisted by tugboats and are indicated with red rectangles in the model logic.

The number of tugs used as per described above will be exported to the logfile.mdb database.

The table below is used to associate the number of tugs per vessel according to the location and the type of ship for vessels transiting the Panamax locks, Post-panamax locks and through the Gaillard Cut. This table is built into the model hardcode and thus will only be accessed through the model, if changes are required by the user.

Index	From	To	From	To	From	To	Post-Panamax Locks	Panamax Locks		Cut
	≥	<	≥	<	≥	≤		In	Out	
ind_tug							expression_tug_3_per_ship	expression_tug_1_per_ship	expression_tug_2_per_ship	expression_tug_4_per_ship
1	0	1200	140	180	1	1	2	0	0	1
2	0	1200	107	140	1	1	DISC(.92,2,1,3)	0	0	1
3	0	1200	140	180	2	2	DISC(.06,2,1,3)	0	0	1
4	0	1200	107	140	2	2	DISC(.54,2,1,3)	0	0	1
5	0	1200	140	180	5	5	3	0	0	1
6	0	1200	107	140	5	5	2	0	0	1
7	0	1200	140	180	7	7	DISC(.16,2,1,3)	0	0	1
8	0	1200	107	140	7	7	DISC(.65,2,1,3)	0	0	1
9	900	965	0	107	1	8	2	2	1	1
10	700	900	91	107	1	8	2	2	0	1
11	700	900	0	91	1	8	2	2	0	0
12	570	700	91	107	1	8	2	2	0	1
13	570	700	0	91	1	8	2	1	0	0
14	0	570	0	80	1	8	2	0	0	0

3.1.5 Lock Crew Requirements

Lock crews are not considered by the model as restrictions to vessel transit, meaning that the model uses as many crews as needed and where applicable. The impact of lock crews as resources is reflected in the results in the lockage times loaded in the model.

One crew represents the staffing needed to assist one vessel through a lockage. Locks need one crew if operating in regular mode, and two crews operating in relay model. Pedro Miguel can only operate in regular mode.

The way the lock operating mode is set in the model remains the same once the scenario is defined for each specific day and will not change until the end of it – time at which another lock operation mode might be selected.

The cost of operating the locks is driven by the number of crews per shift on each lock. The number of crews required on a shift can be calculated based on the number of transits per vessel type, according to three vessel types: Regulars (NR and CR), Restricted (CC, DLCC and CCDL) and Post-Panamax (PCC, PCCDL, PDLCC, PCCHDL and PDLCCH).

The model counts the number of transits for each month and shift, and for each of the twelve (12) combination of lock and vessel type or counters as follows:

- Miraflores – Regular vessels;
- Miraflores – Restricted vessels;
- Pedro Miguel – Regular vessels;
- Pedro Miguel – Restricted vessels;
- Gatún – Regular vessels;
- Gatún – Restricted vessels;
- PPMax Pacific – Regular vessels;
- PPMax Pacific – Restricted vessels;
- PPMax Pacific – Post-Panamax vessels;
- PPMax Atlantic – Regular vessels;
- PPMax Atlantic – Restricted vessels;
- PPMax Atlantic – Post-Panamax vessels.

The number of ships per either Regular, Panamax or Post-panamax per month and shift is recorded into an array for each lock.

Counters were placed after the vessels entered each lock and are indicated with red rectangles in the model logic.

The number of transits per month and shift, calculated as per described above, will be exported to the logfile.mdb database.

3.1.5.1 Sunrise and Sunset Times

Sunrise and sunset times can be defined on a monthly basis by the user. For simplification purposes, 3 (tree) different sets of sunrise and sunset times have been defined based on history data as follows:

Month	Sunrise	Sunset
Jan	6:30	18:00
Feb	6:30	18:00
Mar	6:15	18:30
Apr	6:15	18:30
May	6:00	19:00
Jun	6:00	19:00
Jul	6:00	19:00
Aug	6:00	19:00
Sep	6:15	18:30
Oct	6:15	18:30
Nov	6:30	18:00
Dec	6:30	18:00

Table of Sunrise and Sunset times.

Set#	Sunrise	Sunset
1	6:30	18:00
2	6:15	18:30
3	6:00	19:00

Sunrise and Sunset times sets.

3.1.5.2 Fog

For each month of the year, the user must define the probability occurrence of fog. Below is an example of the partial input table the for establishing of fog parameters:

Month	Prob
Jan	6.5%
Feb	1.5%
Mar	2.4%
Apr	6.7%
May	18.3%
Jun	28.6%
Jul	16.9%
Aug	21.5%
Sep	38.1%
Oct	48.7%
Nov	31.9%
Dec	13.4%

Table of Fog Probability per month.

On foggy days, the vessels will not be sequenced to enter the Cut after midnight, since the rule of thumb is that it takes a vessel approximately an hour to go through the Cut[1]. Also, no vessels are allowed to enter the Cut until 07:45 am.

[1] Page 13/40 of the RFP.

3.1.5.3 Scheduled and Unscheduled downtimes

The user is allowed to setup only scheduled downtimes for Miraflores, Pedro Miguel, Gatun, Pacific and Atlantic locks, by determining the resource, start date of downtime, and the duration in hours. When during outage, only the west lane will be put down. The time before (T.B.D.) and after (T.A.D.) downtime during which a traffic reduction should be applied (T.R.) should also be setup. The traffic reduction will always be applied during downtime.

Unscheduled downtimes are not created by the model since it is meant to be a strategic model. Still, unscheduled downtimes could be added as “false” scheduled downtimes beside real scheduled downtimes through the User Interface.

During outages, part of the traffic is hold outside the Canal since only half of the buckets generated by the Pre-sequencer are actually used.

3.1.5.4 Vessels Allowed to Perform Relay Operation at the Locks

The Canal has few restrictions regarding vessels being able to perform a relay at the locks. The Canal tries not to perform relays with vessels larger than 900ft (for operational reasons) and with Panamax-size passenger vessels (for customer service reasons), but since it is not an absolute rule, and when necessary both types of vessels perform relays, the user is not required to indicate which vessels should not perform relay at the locks in this model.

3.1.5.5 Locks Operating Modes

Under any given scenario, a particular lane of locks can only operate in two modes, which for consistency can be either ***regular*** or ***enhanced***. The latter could be either relay or Merry-go-round at the Gatún Locks, but this will only affect in the service and cycle times, and these times are provided as user-defined input parameters.

Also, the user can specify whether the model will run throughout the whole simulation length in a manual mode or on the automatic mode.

In case the option is manual, the user must specify the operating modes for the locks, otherwise the model will specify the operating modes for each lock lane depending on how long restricted vessels queues in the Pacific and Atlantic Anchorages are on a specific day.

If the user decides to operate the locks in a manual mode throughout the whole simulation run, then the following options for the Panamax Locks can be used:

- All lanes in Regular Mode (All-Regular);
- All lanes in Enhanced Mode (All-Enhanced);
- Lane 1 Enhanced and Lane 2 Regular (L1-Enh_L2-Reg).

Miraflores Locks operating mode is set as being always equal to the Gatun Locks operating mode.

Post-Panamax Pacific Locks also operate in the same way the Post-Panamax Atlantic Locks are set, which is either:

- Enhanced or
- Regular

Note that the Post-Panamax Locks operates in a single lane.

If a particular lock lane were defined as operating on "automatic" mode (see User's Guide for further clarification) then the operating mode of that lock lane would be defined by a simple set of rules instead of being fixed. The rule that determines the operating mode of each of the locks lanes will be based on the size of the restricted vessels queues at the Pacific and Atlantic Anchorages.

This version of the model considers the following rule of thumb to set the locks operating modes when under the automatic condition:

Queue at Pacific Anchorage	Queue at Atlantic Anchorage	Operating Mode
Short	Short	L1-Enh_L2-Reg
Short	MEDIUM / LONG	All-Enhanced
MEDIUM / LONG	Short	All-Enhanced
MEDIUM / LONG	MEDIUM / LONG	All-Enhanced

Model internal criteria to automatically determine Locks Operating Modes on a given day.

So, whenever a long or medium line of restricted vessels waiting on either side of the Canal exist at 00:00 on a given day, the model sets all locks and respective lanes to be operating on the Enhanced mode.

The user must determines what is a short and long queue in the Pre-sequencer and in the model logic for consistency.

Vessels designated the Restriction Codes PCCHDL, PDLCCH, PDLCC, PCCDL, PCC, CCDL, DLCC and CC are regarded as Restricted Vessels.

SV, NR, CCNT and CR coded ships are regarded as unrestricted vessels and therefore their quantities in the Pacific and Atlantic Anchorages do not count for determining the Locks Operating Modes.

3.1.5.6 Tandem Operation

Vessels will be allowed to tandem depending on the maximum combined length over all allowed at each lock as well as whether they are not PD. The maximum combined length allowed in the model logic is 1000 ft. This limit can be manually changed by the user in the Tandem Part of the model logic.

4 Vessel Sequencing

The vessel sequencing routine is a simplified logical way to mimic actual scheduling process presently carried out by the Scheduler every morning. Its main goal is to make best use of the Canal resources in a safe manner, overcoming constraints and attending rules, while striving to increase the system's throughput.

Basically, timetables are preliminary suggested by the "Pre-sequencer", which is a MS-Excel spreadsheet, to the model who then sequence the ships that are ready for transit at every midnight, based on their Restriction Codes and on the scenario of the day or throughout the day, if the vessel is not a booked vessel (Real Time Sequencing Logic).

Read next a detailed description of how ships are sequenced in by the system.

4.1.1 Preliminary Sequence

Before running the model, the user must run the "Pre-sequencer", a spreadsheet created in MS-Excel that generates timetables for ships that are to enter the Canal based on the Canal restriction imposed to the vessels, average transit and lockage times per either the ship is restricted or not as well as based on the scenario of a given day.

This version of the model considers that there could be up to 2.592 (twenty five hundred and two) scenarios for any given day, based on combinations of the following parameters:

Parameter	Configuration	Internal Index
Canal Configuration	Panamax	1
	PósPanamax	2
Scheduling Strategy	Semi-convoy	1
	Convoy	2
Fog	Foggy	1
	Not Foggy	2
Panamax Locks Operating Mode	All-Regular	1
	All-Enhanced	2
	L1-Enh_L2-Reg	3
Sunrise & Sunset Sets	Sands-Set1	1
	Sands-Set2	2
	Sands-Set3	3
NB & SB Upper Bound Queue Lengths	Short-Short	1
	Short-Medium	2
	Short-Long	3
	Medium-Short	4
	Medium-Medium	5
	Medium-Long	6
	Long-Short	7
	Long-Medium	8
	Long-Long	9
Post-panamax Locks Operating Mode	All-Regular	1
	All-Enhanced	2
# or Chambers at the Post-panamax Locks	2-chambers	1
	3-chambers	2
Total number of Scenarios:		**2592**

Scenario configuration parameters and possible entries.

From the Pre-sequencer, the model gets suggested underway times for ships heading Northbound from the Pacific and the Gatun Anchorages as well as for ships heading southbound from the Atlantic and the Gatun Anchorages for each scenario. Suggested Restriction Codes are assigned to each set of underway times, from here on called buckets, based on the Canal restrictions.

Once the vessels have been generated and placed in the ready-for-transit queue at the above mentioned anchorages, so called *sequencing points*, the model allocates the vessels at different time buckets depending on their restriction and on the restriction codes allowed by the buckets generated for the given scenario. This is done every midnight during a simulation run, time at which the day sequence is finally generated.

The new Pre-sequencer and thus the Enhanced model now considers the possibility of having a short, a medium or a long queue length at the outer anchorages for restricted vessels that are awaiting their transit.

4.1.2 Assigning vessels to priority queues based on vessel restriction code

In order to properly sequence vessel departures at each *sequencing poin*t, the arriving vessels should be assigned to distinct queues based on their ability to use Canal resources during different time periods. The vessels that arrive at a particular *sequencing point* will be assigned to *priority queues* based on their restriction codes.

The Restriction Code queues are indexed as described in item Restriction Code Definitions of this report.

4.1.3 The Pre-sequencing Logic

The pre-sequencing logic are further detailed in the next items.

4.1.3.1 <u>At the Panamax Canal</u>

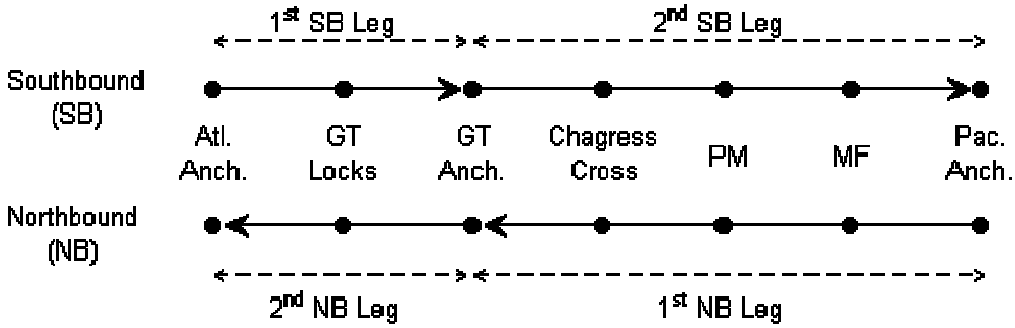

Picture illustrating the main stations and route legs in the Panamax Canal.

The following steps are taken by the Pre-sequencer to create the timetables for restricted vessels for each scenario configuration in the Panamax Canal, while respecting the *time-boundaries*, the

time buckets restrictions and the maximum number of restricted buckets that are to be generated for the scenario in consideration, which depends on the restricted vessels queue size chosen.

1) Generates buckets from Pacific Anchorage to Gatun Lake (first leg of northbound traffic route) for vessels heading northbound and suggests the most restricted code allowed to each of them;

2) If it is a foggy day, vessels wait until 07:45 to enter the CUT;

3) Generates buckets from Atlantic Anchorage to Gatun Lake (first leg of southbound traffic route) for vessels heading southbound and suggests the most restricted code allowed to each of them;

4) Generates buckets from the Gatun Lake to the Atlantic Anchorage for norhtbounds (second leg of northbound traffic route), letting vessels go in such a way that the fist northbound reaches Gatun Locks at the time the penultimate Gatun Lock Lane is cleared by the penultimate southbound restricted vessel that is to transit on that day.

   The number of possible buckets at the first leg is always greater than in the second leg for vessels heading northbound, from the Pacific Anchorage to the Gatun Lake, due to Canal restrictions. Therefore, if only 10 (ten) buckets were created in the first leg, only 10 (ten) buckets will be generated in the second leg.

5) Generates buckets from the Gatun Lake to the Pacific Anchorage for souhtbounds (second leg of southbound traffic route), letting vessels go in such a way that the fist northbound reaches Chagress Crossing at the time the last northbound restricted vessel passes by the same station.

   The number of possible buckets at the second leg is always greater than in the second leg for vessels heading southbound, from the Atlantic Anchorage to the Gatun Lake, due to Canal restrictions. Therefore, if only 10 (ten) buckets were created in the second leg, only 10 (ten) buckets will be generated in the second leg. If more than 10 (ten) buckets were created in the first leg, the number of buckets will be cut so that only 10 (ten) will be generated. This usually happens in scenarios were the restricted vessels queues are long.

The Restriction Codes of the first leg buckets are designated to the second leg buckets, knowing that the arrival time in Gatun Lake (first leg) must be earlier than the suggested underway time from the Gatun Lake (second leg).

The Pre-sequencer keeps searching for a bucket which restriction matches the restriction of the most restricted vessel that arrives first at Gatun Lake. If the time restriction matches (arrival versus departure from Gatun Lake), but none of the second leg buckets allow that restriction, say that no CCDL is allowed in the second leg, the Pre-sequencer will change the restriction of the first leg bucket according to the restriction allowed on the second leg. This procedure is done until all the first leg buckets have been matched to the second leg buckets.
The underway times of the ships from the Outer Anchorages are set in such a way that the ships will not have to wait for entering the first lock of the traffic and at least 10 (ten) minutes must separate the vessels.

6) Once restricted buckets have been generated, the Pre-sequencer generates buckets for the non-restricted vessels, including SV, CR and NR ships, being the first 10 (ten) buckets in the timetable for each scenario reserved for SV vessels and the remaining 15 (fifteen) buckets for CR and NR ones. This means the Pre-sequencer reserves up to 25 (twenty-five) buckets for non-restricted vessels and up to 30 (thirty) for restricted ones per direction.

7) The underway time buckets for SVs when heading <u>northbound</u> are calculated as follows:

    a. UWay of 1st SV NB from Pac Anchor = Uway of last restricted NB from Pac Anchor + TBV;
    b. UWay of last SV NB from Pac Anchor < 1st restricted SB arrival time at PM - transit time of SV NB up to departure time from PM;
    c. UWay of 1st SV NB from Gatun Lake = Uway of last restricted NB from Gatun Lake + TBV;
    d. They will preferably be allocated to their own buckets first.

8) The underway time buckets for SVs when heading <u>southbound</u> are calculated as follows:

    a. UWay of 1st SV SB from Gatun Lake = last restricted NB departure time from PM minus transit time of SV SB up to arrival time at PM;
    b. Uway of last SV SB from Gatun Lake < 1st restricted SB uway from Gatun Lake - TBV;
    c. Once the number of buckets for SVs SB have been calculated, based on steps 1 through 2, the uway times from the Atlantic anchorage are obtained backwards;
    d. UWay of last SV SB from Atl Anchor = Uway of first restricted SB - TBV;
    e. UWay of first SV SB from Atl Anchor > 00:00.

    As a result there will be:

    - 2-way traffic of SVs at the Pacific Panamax Locks;
    - Restricted NB vessels facing opposite traffic of SVs SB at the CUT;
    - Restricted SB vessels facing opposite traffic of SVs NB at the CUT.

9) The first CR/NR non-restricted vessel underway time from outer anchorages is equal to the time the penultimate restricted vessel heading the opposite direction clears the last lock minus the average time non-restricted vessels takes from the outer anchorage to first lock arrival. Their underway times are calculated independently of the SV buckets existence.

The percentage of CR ships over the total of non-restricted buckets is set by the user in the main menu of the Pre-sequencer;

The first non-regular buckets for ships heading northbound are dedicated to CR ships, due to the proximity to the CUT, while the first non-regular buckets for ships heading southbound are dedicated to NR ships.

The Time Between non-restricted vessels, which is also set by the user through the Pre-sequencer menu per direction, determines the maximum number of non-regular buckets. It is limited by the first underway time for restricted vessels that are to enter the locks on the next day and heading the same direction.

If the underway times for the non-restricted ships from the Gatun Anchorage are greater than the latest underway time that allows the vessel to depart the last lock before the next day restricted vessels are to enter on the next day, the non-restricted vessels underway are postponed to the next day. In this case, the first non-restricted ship heading northbound will depart Gatun Anchorage at 10:00 am, while the first southbound non-restricted ship leave Gatun Anchorage at 9:00 am. The underway times of non-regular vessels from the Gatun Anchorage are calculated by the Pre-sequencer based on the earliest arrival time of restricted vessels at the first set of locks heading the opposite direction minus the average time the non-restricted vessel spent from Gatun Anchorage to depart last lock.

Handlines will be inserted in the model respecting Cut and Locks maximum combined dimensions allowed.

The Pre-sequencer does not calculate the underway times for CCNT vessels. Instead, Rockwell/Paragon opted to allocate these vessels to the available buckets in the sequencing part of the model logic as per described in the item named *The Sequencing Logic* of this Manual.

4.1.3.2 At the Post-panamax Canal

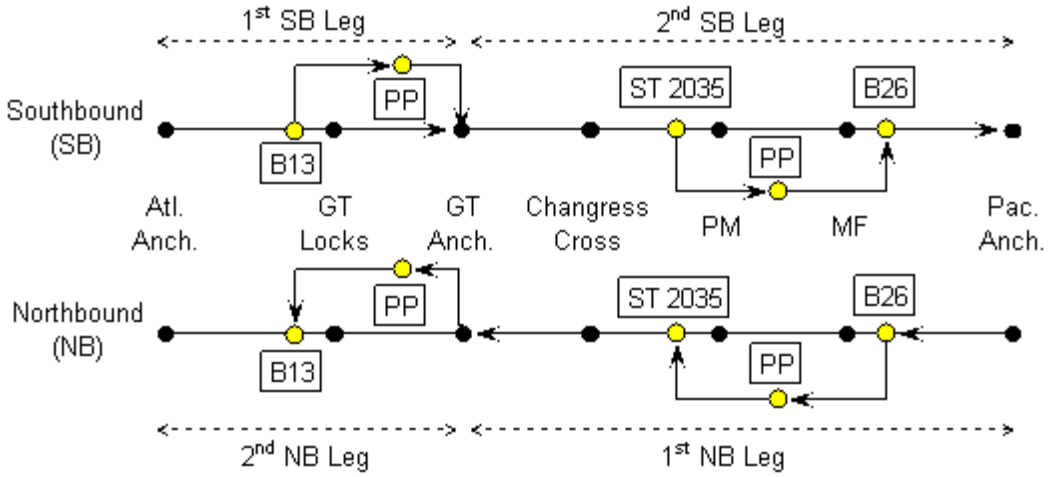

Picture illustrating the main stations and route legs in the Post-panamax Canal.

The Post-panamax buckets are generated following the same principles applied in the Panamax Canal pre-sequencing logic with the additional premises:

1) The Post-panamax buckets are generated first, as if there were no interference from vessels transiting in the Panamax locks;

2) After the Post-panamax buckets are created, the first vessel directed to the Panamax Locks has her underway time from the outer anchorages equal to the first Post-panamax vessel underway time from the outer anchorages plus 15 (fifteen) minutes.

3) From that time on, the buckets for the Panamax Canal are obtained as if there were no interference from the vessels transiting the Post-panamax Locks.

4) The interferences of vessels transiting Panamax Locks over those transiting Post-panamax Locks are controlled by the model.

4.1.3.3 The Pre-sequencing Outputs

Please, refer to the Pre-sequencer User's Guide for detailed description of the Pre-sequencing outputs.

4.1.4 The Sequencing Logic

There is only 1 (one) queue of vessels waiting for transiting the Canal at each outer Anchorage. In these queues, vessels are ranked based on their Arrival Time multiplied by their Booking Status, which is set as being equal to 100 (one-hundred) if the vessel is booked or 1 (one) otherwise.

4.1.4.1 At Every Midnight

Every midnight, the model calculates the number of the scenario for that specific day depending on the scenario configuration parameters and picks up the respective timetable for sequencing the vessels.

When it is time to enter the Canal, the vessel tries to occupy buckets with the same restriction or greater following the sequence established on the table below. If there are no buckets available, the vessels are sent back to the line to try to enter on the next day. This process continues in loop mode until all buckets are fulfilled or until there are no vessels waiting for crossing the Canal.

Sequence of allocation of Restricted Vessels heading Southbound at midnight:

Sequencing order	Vessel RC	To RC Bucket
1	PCCDL/PCCHDL	PCCDL/PCCHDL
2	PDLCC/PDLCCH	PDLCC/PDLCCH
3	PDLCC/PDLCCH	PCCDL/PCCHDL
4	PCC	PDLCC/PDLCCH
5	PCC	PCCDL/PCCHDL
6	PCC	PCC
7	CC	DLCC
8	CC	CCDL
9	CC	CC
10	CC	PDLCC/PDLCCH
11	CC	PCCDL/PCCHDL
12	CC	PCC
13	DLCC	DLCC
14	DLCC	CCDL
15	DLCC	PDLCC/PDLCCH
16	DLCC	PCCDL/PCCHDL
17	CCDL	CCDL
18	CCDL	PCCDL/PCCHDL
19	CCDL	PDLCC/PDLCCH

Sequence of allocation of Non-Restricted Vessels heading Southbound at midnight:

Sequencing order	Vessel RC	To RC Bucket
1	CR	DLCC
2	CR	CCDL
3	CR	CC
4	CR	CR
5	CR	PDLCC/PDLCCH
6	CR	PCCDL/PCCHDL
7	CR	PCC
8	CCNT	SV
9	CCNT	DLCC
10	CCNT	CCDL
11	CCNT	CC
12	CCNT	PDLCC/PDLCCH
13	CCNT	PCCDL/PCCHDL
14	CCNT	PCC
15	SV	SV
16	NR/SV	DLCC
17	NR/SV	CCDL
18	NR/SV	CC
19	NR/SV	CR
20	NR/SV	NR
21	NR/SV	PDLCC/PDLCCH
22	NR/SV	PCCDL/PCCHDL
23	NR/SV	PCC

Sequence of allocation of Restricted Vessels heading Northbound at midnight:

Sequencing order	Vessel RC	To RC Bucket
1	PCCDL/PCCHDL	PCCDL/PCCHDL
2	PDLCC/PDLCCH	PDLCC/PDLCCH
3	PCCDL/PCCHDL	PCCDL/PCCHDL
4	PDLCC/PDLCCH	PDLCC/PDLCCH
5	PCCDL/PCCHDL	PCCDL/PCCHDL
6	PCC	PCC
7	DLCC	DLCC
8	CCDL	CCDL
9	CC	CC
10	PDLCC/PDLCCH	PDLCC/PDLCCH
11	PCCDL/PCCHDL	PCCDL/PCCHDL
12	PCC	PCC
13	DLCC	DLCC
14	CCDL	CCDL
15	PDLCC/PDLCCH	PDLCC/PDLCCH
16	PCCDL/PCCHDL	PCCDL/PCCHDL
17	CCDL	CCDL
18	PCCDL/PCCHDL	PCCDL/PCCHDL
19	PDLCC/PDLCCH	PDLCC/PDLCCH

Sequence of allocation of Non-restricted Vessels heading Northbound at midnight:

Sequencing order	Vessel RC	To RC Bucket
1	CR	DLCC
2	CR	CCDL
3	CR	CC
4	CR	CR
5	CR	PDLCC/PDLCCH
6	CR	PCCDL/PCCHDL
7	CR	PCC
8	CCNT	CCDL
9	CCNT	PCCDL/PCCHDL
10	CCNT	DLCC
11	CCNT	PDLCC/PDLCCH
12	CCNT	CC
13	CCNT	PCC
14	SV/NR	SV
15	SV/NR	DLCC
16	SV/NR	CCDL
17	SV/NR	CC
18	SV/NR	CR
19	SV/NR	NR
20	SV/NR	PDLCC/PDLCCH
21	SV/NR	PCCDL/PCCHDL
22	SV/NR	PCC

By looking at the tables above, and as per defined throughout the project, CCNTs heading Northbound will try to get the last buckets of restricted vessels heading northbound first in order to asure they meet opposite traffic of CCNTs heading the opposite direction. On the other hand, they are not allowed to get SV buckets since this would delay the restricted traffic heading the southbound direction.

In the southbound direction, on the other hand, CCNTs are allowed to occupy SV buckets and after that the restricted buckets if necessary, since this will not only easy these vessels to face opposite traffic of CCNTs and will not delay the northbound convoy.

Since CCDLs and CCNTS will compete for buckets, in order to balance the number of CCDL buckets used by CCDL and CCNTs in the Northbound direction, the User must define in the model the following parameters:

- The CCDL buckets lower bound underway time named *begin_ccdl* in the model. This variable was set to 4,5 hours in the morning and does not have to be changed.

- The CCDL buckets upper bound named *inter_ccdl* in the model. This variable may be fine tuned in order to let more CCDLs to occupy its own buckets or less, depending on the balance of CCDL and CCNT demand of the run the User wants to analyze.

CCNTs and SVs might be generated by the User on the same run if necessary without problems. Still, the CCNT strategy shall be applied to the Panamax Canal just before its extension, while SV strategy to the Post-panamax Canal only.

Suppose the following buckets have been generated to the scenario being simulated:

NB Bucket	UWayPac	UWayGT	RC
1	2,17	12,02	2
2	3,07	17,68	2
3	2,48	17,52	2
4	3,98	18,63	2
5	3,77	19,35	2
6	4,90	14,47	1
7	5,07	13,42	1
8	5,82	13,85	1
9	6,35	15,50	1
10	6,72	15,68	1
11	7,65	16,55	1

If the User has limited the CCDLs buckets upper bound to be 5,5 hours, then buckets number 6 and 7 are reserved for CCDLs while the other CCDL buckets (8, 9, 10 and 11) are reserved for CCNTs. If there are 3 (three) CCNTs to enter the Canal, they will get buckets 9, 10 and 11 while bucket 8 might be used by a CCDL. On the other hand if not all the CCDLs have occupied all the buckets reserved to them, for instance, if there is just one CCDL awaiting at the Pacific Anchorage, bucket number 7 might be used by a CCNT.

This logic also applies during real time sequencing.

The final model logic structure is the same for both Canal Configurations.

The additional 3rd lane of locks aimed for Post-panamax traffic vessels will be able to serve smaller vessels as well, though the model will try to balance the utilization of Post- and panamax locks by comparing the length of the queues at each of the concurrent locks (i.e. Miraflores and Pacific Post-panamax lock).

4.1.4.2 Real-time Sequencing

The model also tries to add Non-booked vessels that arrive throughout the day in the convoy at the same day if there are buckets available.

Sequence of allocation of Vessels heading Southbound:
:

Sequencing order	Vessel RC	To RC Bucket
1	PCCDL/PCCHDL	PCCDL/PCCHDL
2	PDLCC/PDLCCH	PDLCC/PDLCCH
3	PDLCC/PDLCCH	PCCDL/PCCHDL
4	PCC	PDLCC/PDLCCH
5	PCC	PCCDL/PCCHDL
6	PCC	PCC
7	CC	DLCC
8	CC	CCDL
9	CC	CC
10	CC	PDLCC/PDLCCH
11	CC	PCCDL/PCCHDL
12	CC	PCC
13	DLCC	DLCC
14	DLCC	CCDL
15	DLCC	PDLCC/PDLCCH
16	DLCC	PCCDL/PCCHDL
17	CCDL	CCDL
18	CCDL	PCCDL/PCCHDL
19	CCDL	PDLCC/PDLCCH
20	CR	DLCC
21	CR	CCDL
22	CR	CC
23	CR	CR
24	CR	PDLCC/PDLCCH
25	CR	PCCDL/PCCHDL
26	CR	PCC
27	CCNT	SV
28	CCNT	DLCC
29	CCNT	CCDL
30	CCNT	CC
31	CCNT	PDLCC/PDLCCH

32	CCNT	PCCDL/PCCHDL
33	CCNT	PCC
34	SV	SV
35	NR/SV	DLCC
36	NR/SV	CCDL
37	NR/SV	CC
38	NR/SV	CR
39	NR/SV	NR
40	NR/SV	PDLCC/PDLCCH
41	NR/SV	PCCDL/PCCHDL
42	NR/SV	PCC

Sequence of allocation of Vessels heading Northbound:

Sequencing order	Vessel RC	To RC Bucket
1	PCCDL/PCCHDL	PCCDL/PCCHDL
2	PDLCC/PDLCCH	PDLCC/PDLCCH
3	PDLCC/PDLCCH	PCCDL/PCCHDL
4	PCC	PDLCC/PDLCCH
5	PCC	PCCDL/PCCHDL
6	PCC	PCC
7	CC	DLCC
8	CC	CCDL
9	CC	CC
10	CC	PDLCC/PDLCCH
11	CC	PCCDL/PCCHDL
12	CC	PCC
13	DLCC	DLCC
14	DLCC	CCDL
15	DLCC	PDLCC/PDLCCH
16	DLCC	PCCDL/PCCHDL
17	CCDL	CCDL
18	CCDL	PCCDL/PCCHDL
19	CCDL	PDLCC/PDLCCH
20	CR	DLCC

21	CR	CCDL
22	CR	CC
23	CR	CR
24	CR	PDLCC/PDLCCH
25	CR	PCCDL/PCCHDL
26	CR	PCC
26	CCNR	CCDL
27	CCNR	PCCDL/PCCHDL
28	CCNR	DLCC
29	CCNR	PDLCC/PDLCCH
30	CCNR	CC
31	CCNR	PCC
32	SV	SV
33	NR/SV	DLCC
34	NR/SV	CCDL
35	NR/SV	CC
36	NR/SV	CR
37	NR/SV	NR
38	NR/SV	PDLCC/PDLCCH
39	NR/SV	PCCDL/PCCHDL
40	NR/SV	PCC

4.1.4.3 Maximum Waiting Time at Outer Anchorages

If a vessel is waiting for entering the Canal for more than the maximum waiting time at the outer anchorages specified through the User Interface, she might receive priority to enter the Canal as soon as there is a bucket available. Since this priority is based on the vessel's arrival time, her priority might be greater than booked vessels.

4.1.4.4 The Booking System

There are three significant aspects of the booking system that are considered by the simulation model:

- Number of "slots" that are available for booking;
- Assignment of booking status to arriving vessels (including a check for the availability of booking slots);
- Effect of booking status (priority) on vessel sequencing.

Number of "slots" that are available for booking

Currently, the Canal has two separate “quotas” for booking, based on the size of the vessels.

Vessels of less than 91 feet in beam are allocated a particular number of total slots, and vessels equal or greater than 91 feet are allocated a different number of booking slots. Furthermore, limits are placed on the number of northbound and southbound vessels within each category, to avoid all the slots being taken by vessels traveling on the same direction.

Currently, ten (10) slots per day are allocated to vessels smaller than 91 feet in beam, with no more than five (5) in each direction. In a similar fashion, there are eleven (11) slots allocated to vessels equal or larger than 91 feet in beam, with no more than six (6) allowed in each direction.

Below is the input table that is used to specify the number of available booking slots for each size range:

# of Booking Slots **Beam Limit:** **91**

Operation	Direction	< 91	≥ 91
Regular	Northbound	5	3
	Southbound	5	3
Outage	Northbound	5	3
	Southbound	6	3

Booking slots setup table.

Assignment of booking status to arriving vessels

As part of the process of vessel generation, the system assigns the booking status of each vessel. The booking status of a vessel is assigned based on a probabilistic distribution per market segment and direction of travel.

Once a vessel has been assigned a booking status, the model checks if there is a booking slot available. If no slot is available, the vessel is directed to the respective priority queue and looses the booking status. Booked vessels have null value as booking status.

Effect of booking status on vessel sequencing

The model give priority to booked vessels that are assigned to the same *priority queu*e.

Please see additional comments regarding vessel prioritization below.

4.1.4.5 Prioritizing vessels that belong to the same queue

The first tiebreaker is whether the vessel is booked or not. The second tiebreaker is based on the vessels' ready-time.

4.1.5 Preliminary versus Simulated Sequence

The Preliminary Vessel Sequence can be compared to the Sequence of vessels generated after the model is run throughout a single simulation day with discrete vessel arrivals input by the user.

5 Validation and Verification of the Panama Canal Vessel Transits Simulator

The input data for the scenario used for verification and validation purposes is in Appendix 2.

5.1 Verification and Validation of the Panamax Canal with historical data of 2002

The Enhanced Model v2.0 have the same accuracy of the previous model version.

The outputs show that around 99% of the vessels attend CUT and lockage restrictions as stated in the tables below, which indicate the total number of occurrences and its percentage over the total number of transits. There are also indication of the minimum, average and maximum time a vessel was late to leave the respective resource throughout the year simulated.

	Northbound Night Lock GT				
year	#	%	min	avg	max
2002	61	0.81%	0.02	0.82	3.33

	Southbound Night at CUT				
year	#	%	min	avg	max
2002	7	0.24%	0.03	0.19	0.42

	Southbound Night Lock MF				
year	#	%	min	avg	max
2002	91	0.89%	0.02	0.82	4.58

In terms of monthly throughput per Market Segment, the Enhanced Model accounted for more than 95% accuracy if compared to the historical throughput, thus satisfying the criteria stated by the Request for Proposal.

Year #	Month	Container		Dry Bulk		General Cargo		Others		Passengers		Refrigerated		Tankers		Vehicle Carriers	
		Abs	%	Abs	%	Abs	%	Abs	%	Abs	%	Abs	%	Abs	%	Abs	%
2002	out	-2,0	-2,4%	1,2	1,2%	0,0	0,1%	2,2	4,3%	0,9	8,9%	-1,0	-1,0%	1,0	1,5%	1,2	5,1%
2002	nov	1,0	1,2%	3,2	4,0%	2,0	4,5%	0,0	0,1%	-1,2	-6,2%	4,0	4,1%	-1,0	-1,5%	-1,8	-6,7%
2002	dez	1,0	1,3%	-2,8	-2,5%	-1,0	-1,9%	0,2	0,3%	-0,2	-1,0%	-5,0	-3,5%	1,0	1,6%	1,2	4,3%
2002	jan	-1,0	-1,2%	0,2	0,2%	0,0	0,1%	0,3	0,6%	0,9	6,1%	1,0	0,7%	0,0	0,1%	-0,8	-2,6%
2002	fev	0,0	0,0%	-0,8	-0,8%	0,0	0,1%	-1,4	-2,4%	1,0	32,0%	0,0	0,0%	-1,9	-2,3%	0,2	0,7%
2002	mar	0,0	0,0%	2,2	2,3%	-1,0	-2,3%	1,3	2,6%	1,0	0,0%	2,0	2,5%	2,0	2,9%	0,2	0,7%
2002	abr	0,0	0,0%	-0,8	-0,9%	2,0	5,8%	-0,4	-0,7%	-1,0	-100,0%	2,0	2,7%	-1,0	-1,3%	-0,8	-2,9%
2002	mai	1,0	1,0%	-0,8	-0,7%	-1,0	-2,2%	0,5	0,9%	1,0	0,0%	0,0	0,0%	0,0	0,1%	0,3	0,7%
2002	jun	-1,0	-1,1%	-2,8	-3,1%	-1,0	-1,9%	0,0	0,1%	0,0	-1,0%	-3,0	-4,2%	1,0	1,7%	1,2	4,9%
2002	jul	0,0	0,0%	1,2	1,3%	1,0	2,0%	-0,6	-1,1%	-11,1	-84,8%	2,0	2,8%	1,0	1,5%	-0,8	-2,7%
2002	ago	2,0	2,9%	1,2	1,1%	0,0	0,1%	-0,3	-0,5%	0,0	-1,0%	0,0	0,0%	-1,9	-2,4%	0,2	0,7%
2002	set	-1,0	-1,3%	0,2	0,2%	-1,0	-2,0%	1,3	2,5%	-0,1	-1,0%	-1,0	-1,3%	0,0	0,1%	-0,8	-2,3%

Comparison between number of transits completed and forecasted per month and Market Segment for northbound traffic.

Year #	Month	Container		Dry Bulk		General Cargo		Others		Passengers		Refrigerated		Tankers		Vehicle Carriers	
		Abs	%	Abs	%	Abs	%	Abs	%	Abs	%	Abs	%	Abs	%	Abs	%
2002	out	0,2	0,2%	2,3	1,6%	1,0	2,7%	0,6	1,1%	0,6	1,8%	4,0	3,5%	0,1	0,1%	0,2	0,7%
2002	nov	-0,8	-1,0%	1,3	1,1%	2,0	5,2%	2,6	6,3%	0,8	3,1%	1,0	0,9%	0,1	0,1%	1,2	4,2%
2002	dez	0,3	0,3%	-0,7	-0,5%	-1,0	-2,5%	-1,5	-2,8%	-1,3	-3,9%	-3,0	-2,2%	-1,9	-2,0%	-1,7	-4,9%
2002	jan	0,2	0,2%	1,3	1,1%	-1,0	-2,2%	0,2	0,4%	0,7	2,5%	0,0	0,0%	0,1	0,1%	1,2	3,7%
2002	fev	0,1	0,1%	-2,7	-2,2%	0,0	0,1%	-0,1	-0,2%	0,9	10,0%	1,0	1,2%	2,1	2,5%	-0,7	-1,9%
2002	mar	-0,9	-1,0%	0,3	0,2%	1,0	2,7%	-0,8	-1,2%	0,0	-1,0%	2,0	2,3%	0,1	0,1%	0,3	0,7%
2002	abr	1,0	1,0%	-0,7	-0,4%	0,0	0,1%	-1,5	-2,2%	-1,0	-50,5%	2,0	2,6%	0,1	0,1%	0,2	0,7%
2002	mai	-0,1	-0,1%	2,3	1,8%	-1,0	-2,5%	1,8	3,0%	1,0	0,0%	-1,0	-1,7%	0,0	0,1%	-0,7	-1,6%
2002	jun	0,0	0,0%	0,2	0,2%	1,0	3,7%	0,7	1,7%	0,0	0,0%	-1,0	-1,6%	0,1	0,1%	1,2	3,8%
2002	jul	0,3	0,3%	1,3	1,1%	0,0	0,1%	0,0	0,0%	-1,1	-17,5%	2,0	3,8%	0,1	0,1%	-0,8	-2,3%
2002	ago	0,5	0,7%	-2,7	-1,9%	0,0	0,1%	0,2	0,4%	-1,1	-8,1%	-2,0	-3,1%	-0,9	-1,1%	0,3	0,7%
2002	set	-0,6	-0,8%	0,3	0,2%	-1,0	-2,3%	-1,1	-1,8%	-1,2	-4,9%	-1,0	-1,2%	1,1	1,3%	-0,7	-2,0%

Comparison between number of transits completed and forecasted per month and Market Segment for southbound traffic.

It is important to note that the less ships are created per market segment, the greater is the probability of heaving results with worse accuracy. Still, this does not represent great impact in the results (see Passenger vessels figures).

Vessels behave as expected throughout the whole Canal for the purpose of strategic analysis.

Both Canal Waters Time and In-transit Times are fairly close to the actual figures supplied by ACP:

Year #	Month	NR		CC		DLCC		CCDL		CR		PDLCC		PCCDL		PCC	
		Avg	StD	Avg	StD	Avg	StD	Avg	StD	Avg	StD	Avg	StD	Avg	StD	Avg	StD
2002	out	11,05		10,40		10,50		9,85		12,16		0,00		0,00		0,00	
2002	nov	10,53		9,78		9,81		9,57		10,86		0,00		0,00		0,00	
2002	dez	11,38		9,60		10,01		9,85		12,76		0,00		0,00		0,00	
2002	jan	11,57		9,34		10,06		9,85		13,03		0,00		0,00		0,00	
2002	fev	12,03		10,28		10,27		10,24		13,62		0,00		0,00		0,00	
2002	mar	10,43		9,02		9,14		9,35		10,86		0,00		0,00		0,00	
2002	abr	10,90		9,03		9,45		9,64		12,79		0,00		0,00		0,00	
2002	mai	10,40		10,10		9,92		9,63		9,79		0,00		0,00		0,00	
2002	jun	8,91		9,17		9,70		9,17		11,20		0,00		0,00		0,00	
2002	jul	9,38		9,04		9,08		9,26		10,94		0,00		0,00		0,00	
2002	ago	9,82		9,25		9,60		9,53		12,25		0,00		0,00		0,00	
2002	set	10,26		9,86		10,35		9,81		13,19		0,00		0,00		0,00	

In-transit Times per Restriction and per month for vessels heading northbound.

Year #	Month	NR		CC		DLCC		CCDL		CR		PDLCC		PCCDL		PCC	
		Avg	StD	Avg	StD	Avg	StD	Avg	StD	Avg	StD	Avg	StD	Avg	StD	Avg	StD
2002	out	8,74		13,10		13,96		9,64		10,08		0,00		0,00		0,00	
2002	nov	8,67		13,85		13,72		9,77		10,42		0,00		0,00		0,00	
2002	dez	8,88		14,01		14,16		10,09		11,56		0,00		0,00		0,00	
2002	jan	9,19		13,89		14,11		9,62		10,96		0,00		0,00		0,00	
2002	fev	8,97		14,41		14,29		10,34		10,53		0,00		0,00		0,00	
2002	mar	8,42		12,06		12,98		9,26		9,81		0,00		0,00		0,00	
2002	abr	8,24		12,64		13,05		9,67		10,43		0,00		0,00		0,00	
2002	mai	8,28		13,31		12,94		9,82		9,06		0,00		0,00		0,00	
2002	jun	8,53		11,63		12,31		9,29		9,65		0,00		0,00		0,00	
2002	jul	8,55		11,55		12,29		9,25		9,75		0,00		0,00		0,00	
2002	ago	8,32		12,12		12,31		9,45		8,76		0,00		0,00		0,00	
2002	set	8,72		13,71		13,51		9,64		9,67		0,00		0,00		0,00	

In-transit Times per Restriction and per month for vessels heading southbound.

Year #	Month	NR		CC		DLCC		CCDL		CR		PDLCC		PCCDL		PCC	
		Avg	StD	Avg	StD	Avg	StD	Avg	StD	Avg	StD	Avg	StD	Avg	StD	Avg	StD
2002	out	24,54		26,19		22,13		31,13		22,85		0,00		0,00		0,00	
2002	nov	21,47		22,67		20,63		39,74		19,40		0,00		0,00		0,00	
2002	dez	23,21		21,20		22,10		40,59		32,46		0,00		0,00		0,00	
2002	jan	23,52		21,92		23,43		28,23		30,70		0,00		0,00		0,00	
2002	fev	24,41		24,96		22,86		36,16		34,98		0,00		0,00		0,00	
2002	mar	22,30		21,42		19,86		32,60		19,30		0,00		0,00		0,00	
2002	abr	21,46		19,10		20,20		28,27		34,07		0,00		0,00		0,00	
2002	mai	23,50		23,29		23,26		21,60		24,66		0,00		0,00		0,00	
2002	jun	22,11		20,52		21,38		21,52		32,34		0,00		0,00		0,00	
2002	jul	22,74		27,11		21,14		22,85		24,00		0,00		0,00		0,00	
2002	ago	22,87		25,19		23,31		22,70		26,72		0,00		0,00		0,00	
2002	set	23,32		22,19		21,27		32,07		27,78		0,00		0,00		0,00	

Canal Waters Time per Restriction and per month for vessels heading northbound.

Year #	Month	NR		CC		DLCC		CCDL		CR		PDLCC		PCCDL		PCC	
		Avg	StD	Avg	StD	Avg	StD	Avg	StD	Avg	StD	Avg	StD	Avg	StD	Avg	StD
2002	out	23,05		36,09		29,45		22,82		51,90		0,00		0,00		0,00	
2002	nov	18,88		26,17		28,09		23,13		29,20		0,00		0,00		0,00	
2002	dez	19,66		28,56		29,05		24,62		46,60		0,00		0,00		0,00	
2002	jan	19,78		29,07		25,51		25,85		34,40		0,00		0,00		0,00	
2002	fev	19,93		29,06		29,14		23,97		50,63		0,00		0,00		0,00	
2002	mar	19,53		30,69		26,24		22,06		40,14		0,00		0,00		0,00	
2002	abr	19,22		30,64		27,19		24,79		34,99		0,00		0,00		0,00	
2002	mai	18,47		32,01		28,97		21,57		32,22		0,00		0,00		0,00	
2002	jun	19,15		28,32		23,68		18,88		21,47		0,00		0,00		0,00	
2002	jul	18,26		24,20		25,49		19,34		41,89		0,00		0,00		0,00	
2002	ago	18,71		31,18		27,33		20,64		32,48		0,00		0,00		0,00	
2002	set	19,23		30,22		27,14		21,89		42,11		0,00		0,00		0,00	

Canal Waters Time per Restriction and per month for vessels heading southbound.

5.2 Verification of the Post-Panamax Canal with hypothetical data for year 2015

The model with the addition of one lane of Post-Panamax locks in the Atlantic and Pacific and their corresponding new navigation channels were tested with hypothetical data for year 2015. The input data for this scenario is also listed in Appendix 2.

The outputs show that around 95% of the vessels attend CUT and lockage restrictions.

In terms of monthly throughput per Market Segment, the Enhanced Model accounted for more than 95% accuracy if compared to the hypothetical throughput for year 2015.

Year #	Month	Container		Dry Bulk		General Cargo		Others		Passengers		Refrigerated		Tankers		Vehicle Carriers	
		Abs	%	Abs	%	Abs	%	Abs	%	Abs	%	Abs	%	Abs	%	Abs	%
2015	out	1,4	1,0%	1,6	1,2%	-1,0	-3,3%	0,0	0,1%	-1,0	-6,2%	0,8	1,3%	1,1	2,0%	-0,4	-1,1%
2015	nov	-0,4	-0,3%	-1,3	-1,0%	-0,5	-1,4%	0,2	0,7%	0,4	2,3%	-1,3	-1,8%	0,9	1,8%	-0,4	-1,1%
2015	dez	-0,1	-0,1%	1,5	1,3%	0,4	1,1%	-0,5	-1,0%	-0,4	-2,7%	-0,4	-0,4%	-0,2	-0,3%	0,7	1,9%
2015	jan	-5,3	-3,9%	-2,5	-1,9%	0,6	1,8%	-0,2	-0,5%	0,0	0,1%	-1,5	-1,4%	-1,2	-2,3%	-1,3	-3,3%
2015	fev	0,9	0,6%	2,8	3,1%	0,1	0,4%	-0,4	-0,9%	-1,0	-6,2%	-0,6	-0,5%	0,1	0,3%	-0,3	-0,7%
2015	mar	2,3	1,5%	-0,7	-0,6%	-0,4	-1,5%	0,1	0,3%	1,2	9,5%	-0,8	-0,5%	0,4	0,6%	1,7	4,5%
2015	abr	2,1	1,4%	1,5	1,3%	0,0	-0,1%	0,6	1,7%	-0,2	-1,7%	1,3	0,9%	-0,6	-1,0%	-0,4	-1,1%
2015	mai	-6,8	-4,4%	-4,0	-2,9%	-0,9	-2,8%	-2,1	-5,2%	1,4	87,5%	-3,5	-3,3%	-0,9	-1,3%	-0,4	-1,3%
2015	jun	5,0	3,2%	3,5	3,2%	1,7	7,5%	2,8	7,6%	0,4	25,0%	4,0	4,2%	1,3	2,3%	0,6	1,7%
2015	jul	-0,5	-0,3%	-1,5	-1,2%	-0,6	-1,8%	-0,9	-2,0%	1,0	0,0%	2,5	3,1%	0,4	0,8%	0,3	1,0%
2015	ago	0,7	0,4%	-0,5	-0,4%	-0,6	-2,1%	0,8	2,4%	0,0	0,0%	-0,3	-0,4%	0,6	1,0%	-0,1	-0,2%
2015	set	1,5	1,0%	2,6	2,4%	0,4	1,5%	0,0	0,1%	-1,0	-12,4%	0,6	0,8%	-0,7	-1,2%	0,1	0,4%

Comparison between number of transits completed and forecasted per month and Market Segment for northbound traffic.

Year #	Month	Container		Dry Bulk		General Cargo		Others		Passengers		Refrigerated		Tankers		Vehicle Carriers	
		Abs	%	Abs	%	Abs	%	Abs	%	Abs	%	Abs	%	Abs	%	Abs	%
2015	out	1,2	0,8%	1,0	0,7%	0,3	1,1%	0,3	0,7%	-1,5	-22,8%	1,6	2,8%	0,1	0,1%	-0,9	-2,0%
2015	nov	0,9	0,6%	-0,4	-0,2%	-0,2	-0,8%	0,5	1,4%	-2,2	-7,5%	-1,4	-1,9%	-0,7	-1,3%	-0,8	-1,5%
2015	dez	-2,2	-1,4%	-1,4	-0,8%	-0,2	-0,6%	0,0	0,0%	0,6	1,7%	-2,1	-2,1%	0,1	0,1%	-0,4	-0,9%
2015	jan	1,3	0,8%	0,0	0,0%	0,2	0,7%	-0,3	-0,7%	-0,8	-1,8%	-1,1	-1,0%	0,5	1,0%	-0,1	-0,2%
2015	fev	1,3	1,0%	-1,0	-0,6%	0,2	1,3%	0,6	1,8%	0,3	1,3%	-1,1	-0,9%	0,9	1,7%	1,2	3,0%
2015	mar	-1,7	-1,1%	1,9	1,2%	-0,2	-0,8%	-0,4	-1,0%	-0,8	-2,6%	0,4	0,2%	-0,3	-0,5%	-0,1	-0,2%
2015	abr	1,2	0,8%	-0,2	-0,1%	-0,5	-1,9%	0,5	1,4%	0,7	2,8%	1,5	1,2%	-0,7	-1,1%	0,2	0,5%
2015	mai	0,5	0,3%	0,6	0,4%	0,5	2,0%	-1,5	-3,0%	1,0	7,8%	2,0	2,4%	-0,6	-0,9%	-0,6	-1,2%
2015	jun	-0,4	-0,3%	0,7	0,5%	0,3	1,2%	0,5	1,0%	0,5	8,0%	0,1	0,1%	0,4	0,6%	0,8	1,9%
2015	jul	-0,9	-0,5%	-1,1	-0,7%	-0,1	-0,4%	0,6	1,8%	1,0	0,0%	1,2	1,9%	-0,9	-1,2%	-1,9	-3,7%
2015	ago	0,6	0,4%	1,0	0,7%	-0,7	-2,1%	-0,6	-1,2%	-0,6	-38,1%	-1,4	-1,9%	0,3	0,5%	1,4	3,6%
2015	set	-0,6	-0,3%	2,0	1,7%	0,8	3,6%	0,2	0,6%	0,4	23,8%	0,9	1,3%	0,6	1,1%	0,2	0,7%

Comparison between number of transits completed and forecasted per month and Market Segment for southbound traffic.

It is important to note that the less ships are created per market segment, the greater is the probability of heaving results with worse accuracy. Still, this does not represent great impact in the results (see Passenger vessels figures).

Vessels behave as expected throughout the whole Canal for the purpose of strategic analysis.

Both Canal Waters Time and In-transit Times are fairly close to the actual figures supplied by ACP:

Year #	Month	NR		CC		DLCC		CCDL		CR		PDLCC		PCCDL		PCC	
		Avg	StD	Avg	StD	Avg	StD	Avg	StD	Avg	StD	Avg	StD	Avg	StD	Avg	StD
2015	out	10,66		7,89		7,42		8,23		0,00		10,42		0,00		11,31	
2015	nov	9,96		7,80		6,90		8,48		0,00		11,83		0,00		11,31	
2015	dez	10,19		7,24		8,12		8,72		0,00		10,03		0,00		11,28	
2015	jan	10,35		7,76		7,93		8,48		0,00		11,14		0,00		10,95	
2015	fev	10,03		7,21		6,84		8,54		0,00		10,36		0,00		10,95	
2015	mar	9,50		7,87		7,68		8,27		0,00		10,36		0,00		8,94	
2015	abr	9,50		7,76		7,37		8,35		0,00		10,68		0,00		8,51	
2015	mai	9,47		7,91		7,89		8,23		0,00		0,00		0,00		9,10	
2015	jun	9,26		7,78		7,76		8,62		0,00		11,89		0,00		9,66	
2015	jul	9,24		7,44		7,89		8,04		0,00		10,04		0,00		8,57	
2015	ago	9,36		7,98		7,81		8,44		0,00		9,68		0,00		9,44	
2015	set	10,04		7,87		8,51		7,92		0,00		10,79		0,00		10,10	

In-transit Times per Restriction and per month for vessels heading northbound.

Year #	Month	NR		CC		DLCC		CCDL		CR		PDLCC		PCCDL		PCC	
		Avg	StD	Avg	StD	Avg	StD	Avg	StD	Avg	StD	Avg	StD	Avg	StD	Avg	StD
2015	out	10,70		12,81		13,83		9,67		0,00		11,61		0,00		12,93	
2015	nov	10,13		12,73		13,01		9,11		0,00		9,19		0,00		11,80	
2015	dez	9,95		12,33		12,10		9,11		0,00		11,99		0,00		12,50	
2015	jan	10,16		12,67		12,32		8,79		0,00		11,16		0,00		12,38	
2015	fev	10,13		12,32		12,24		8,97		0,00		12,73		0,00		12,32	
2015	mar	10,04		13,76		13,86		8,98		0,00		9,21		0,00		12,62	
2015	abr	9,84		13,89		13,44		9,19		0,00		9,36		0,00		12,77	
2015	mai	10,51		13,22		13,71		8,93		0,00		9,80		0,00		12,77	
2015	jun	10,28		13,17		13,93		9,36		0,00		9,77		0,00		12,58	
2015	jul	10,32		13,23		13,50		9,40		0,00		9,71		0,00		12,81	
2015	ago	10,14		13,38		13,59		9,41		0,00		9,88		0,00		12,70	
2015	set	10,80		13,36		13,80		9,84		0,00		11,63		0,00		13,50	

In-transit Times per Restriction and per month for vessels heading southbound.

Year #	Month	NR		CC		DLCC		CCDL		CR		PDLCC		PCCDL		PCC	
		Avg	StD	Avg	StD	Avg	StD	Avg	StD	Avg	StD	Avg	StD	Avg	StD	Avg	StD
2015	out	19,87		16,37		10,50		12,20		0,00		19,95		0,00		15,22	
2015	nov	17,19		19,31		11,92		15,32		0,00		25,07		0,00		15,08	
2015	dez	19,92		14,66		11,93		13,06		0,00		12,93		0,00		13,89	
2015	jan	21,11		21,05		11,11		11,29		0,00		19,64		0,00		14,42	
2015	fev	18,73		13,01		11,33		12,77		0,00		14,29		0,00		13,17	
2015	mar	18,15		16,84		10,44		14,48		0,00		18,99		0,00		12,14	
2015	abr	16,24		14,19		10,14		12,46		0,00		19,33		0,00		10,63	
2015	mai	17,18		16,59		9,96		17,09		0,00		0,00		0,00		11,96	
2015	jun	18,41		15,18		10,07		15,31		0,00		14,93		0,00		11,90	
2015	jul	17,29		13,53		10,13		13,07		0,00		23,04		0,00		11,63	
2015	ago	17,75		13,96		10,18		16,47		0,00		14,48		0,00		13,46	
2015	set	20,13		19,64		11,00		13,22		0,00		17,21		0,00		12,97	

Canal Waters Time per Restriction and per month for vessels heading northbound.

Year #	Month	NR		CC		DLCC		CCDL		CR		PDLCC		PCCDL		PCC	
		Avg	StD	Avg	StD	Avg	StD	Avg	StD	Avg	StD	Avg	StD	Avg	StD	Avg	StD
2015	out	19,69		21,33		16,07		19,05		0,00		14,82		0,00		15,76	
2015	nov	21,20		21,91		15,27		13,56		0,00		12,22		0,00		15,31	
2015	dez	20,84		23,15		14,15		14,70		0,00		22,48		0,00		16,28	
2015	jan	20,60		22,76		14,51		12,83		0,00		20,30		0,00		15,90	
2015	fev	22,31		21,94		14,43		11,31		0,00		21,82		0,00		16,17	
2015	mar	19,68		21,28		16,07		13,28		0,00		18,76		0,00		16,05	
2015	abr	19,78		25,49		15,64		14,57		0,00		12,24		0,00		17,40	
2015	mai	19,16		20,53		15,88		17,40		0,00		28,58		0,00		16,52	
2015	jun	21,13		22,72		16,12		15,40		0,00		12,87		0,00		16,79	
2015	jul	21,30		20,10		15,66		19,97		0,00		30,99		0,00		16,07	
2015	ago	22,51		20,56		15,77		19,90		0,00		23,00		0,00		17,19	
2015	set	21,88		20,83		16,06		21,31		0,00		26,23		0,00		16,70	

Canal Waters Time per Restriction and per month for vessels heading southbound.

CCNT and SV results are included in the NR column at the User Interface. In order to analyze the performance parameters of these vessels, please refer to the *logfiles*, where the model records their restriction code attributes for ease distinction among non-restricted vessels.

6 Animation

The animation of the model contains:

- Continuous movement of northbound and southbound vessels through the Panama Canal;
- The position of vessels within the system;
- Different color and size for each vessel type;
- The queue size (number of vessels) for each component;
- An idle/busy graphical indicator for all components;
- 24-hour continuous digital clock and calendar;
- Calendar with the current date of the simulation run;
- Continuous counters for vessels exiting the Canal;
- Full-Canal on Single-Screen;
- Better animation of Auxiliary Resources (as part of the flow control logic), Tie-up Stations and Anchorages to ease fine tuning of their capacity when reaching capacity. That will allow the analyst to clearly verify where the bottle neck of the system is as enhancements are implemented (to walk with the bottle-neck);
- Instantaneous counter of number of ships and tugs at each resource;
- Average number of ships at each resource plotted on graphs on the animation screen;

Its main goal is to allow the user to witness whether the system is behaving as it should and if it is, how it behaves depending on the inputs set by the user.

Please refer to the User's Guide for further details concerning the Model Animation.

7 Definitions

This document uses several technical terms clarified below for a better understanding:

Model or System
Describes the whole process that is being simulated, and consists of all decision logic (traffic rules, queueing rules, arrival rules) and objects behavior (entities flow and attributes, resources utilization, variables/expressions, and queues). The model shall replicate reality according to the expected detail, and allow the user to run what-if scenarios in order to analyze the relationship between cause x consequence.

Configuration
Is the physical alternatives of the Canal. Must not be used as a scenario. Example = Existing Canal + Pacific entrance expansion.

Scenario
Consists of a unique set of combinations (variables, demand, climate, physical configuration of canal, vessel types, queueing rules etc) that will be simulated and produce individual results that will be analyzed. Example : simulation of 1 year of Canal Operations with a 11% increase on demand for Container Vessels using existing configuration.

Scenario Merge
Combination of 2 or more scenarios in consecutive and consistent order to produce an annual and long term scenario for analysis. Example = Scenario 11 (from year 2007 to 2010) + Scenario 14 (from year 2010 to 2015).

Sequencing
Vessel sequencing is an output of a simulation run, not a user input. The sequencing will be produced per 2 different methods :

- Proposed sequence : algorithm based, during initial simulation state (expected)
- Actual sequence : final sequence after simulation ends, considering variation, resources occupation, queues etc.

Replication
Interactions of a simulation run, that produces independent outputs per run, producing a sample of outputs, and allows better statistical analysis of model results. Example = Simulate year 2009 of Panama Canal during 25 replications will produce 25 times year 2009, with independent and different results, based of system behavior and random variation of distributions used. Number of replications must be established seeking minimum confidence level.

Batch Run
Simulation run without animation option. Produces identical results to animation mode, but faster.

Entity
Entities are objects that arrive and flow through the system, compete among themselves for resources, queues and transporters utilization. Vessels are modeled as entities, and they shall have individual characteristics (attributes)

Attribute
Numeric (real) value that describes individual characteristic of an entity at a certain moment in time. Can be altered per user or per other entities during a simulation run. Example = "Vessel Type : yatch".

Variable
Numeric (real) value that describe a system attribute/characteristic at a certain moment in time. Can be altered per user or per other entities during a simulation run. Example = "LOCKAGE_TIME = 3.5". Used to simplify user input or model logic understanding.

Expression
Mathematical expressions (or formulas) are formed using combinations of integers, constants, attributes, variables, or random distributions. Expressions are updated continuously during simulation run and cannot be altered by user or any entity during simulation run. Example = (TNOW*3.56 – Normal (12.1, 2)*Shipsize)

Resource
Objects that shall be used per entities, providing a state/place transformation. Allow performance calculation of utilization, transaction time etc. Example = Locks will be modeled as resources.

Queue
A place where entities are held while they wait to be handled, transferred or processed. Consists of a waiting time, and allow different ranking formulas, that defines order of leaving queue. Example = First In First Out rule.

Stations
A place where entities are held while they wait to be handled, transferred or processed. Consists of a waiting time, and allow different ranking formulas, that defines order of leaving queue.

Seasonal Index
The Seasonal Index is defined as being equal to the percentage of forecasted yearly traffic that will flow through the Canal at each month of the year.

Vessel Categories
Vessels are divided into Market Segments, beam and length ranges as well as whether booked or not. The number of size categories is basically dependent on how the vessel dimensions per market segment affect capacity and are therefore totally configurable by the end user.

8 Appendixes

I. Enhanced Model User´s Guide
II. Input Data for Year 2002 and 2015 Scenarios
III. Minutes of Meetings/Site Visit Notes