Tropical Lake Ecology Assessment
With Emphasis on Changes in
Salinity of Lakes
Project No.SAA-140714
Final Technical Memorandum # 8
Review of Proposed
Mitigation Measures

Prepared for:
Panama Canal Authority

Prepared by:
URS Holdings, Inc.

Panama – March, 2005

TABLE OF CONTENTS

1.0 INTRODUCTION 1-1
1.1 Objective 1-1
1.2 Background 1-1
1.3 Structure 1-2

2.0 REVIEW OF MITIGATION MEASURES 2-1
2.1. Overview of Mitigation Measures 2-1
2.1.1 Consideration of Preferred Mitigation Methodologies 2-2
2.1.2 Assessment of Preferred Mitigation Methodologies 2-3

3.0 CONCLUSIONS AND RECOMMENDATIONS 3-1
3.1 Conclusions 3-1
3.2 Recommendations 3-1
3.2.1 Mitigation Measures for Consideration 3-2
3.2.1.1 Flushing of the Water Savings Basins 3-2
3.2.1.2 Diagonal Transfer from Water Saving Basins 3-2
3.2.1.3 Enhanced Flushing of Lower Lock Chamber 3-3
3.2.1.4 Operational Flushing of the Upper Lock Entrance 3-3
3.2.1.5 Flushing of the Lock Lower Entrance 3-3
3.2.2 Additional Recommendations 3-3

4.0 BIBLIOGRAPHY 4-1

Appendix A - System Diagrams

1.0 INTRODUCTION

The Panama Canal Authority (ACP) is currently performing a series of studies to assess the feasibility of a new set of locks, alternative systems to raise and lower vessels, and upgrading the navigation channel to prepare a Master Plan for the Modernization and Expansion of the Canal. Parts of these studies include the analysis of risks of the possibility of increased salinity intrusion into Lakes Gatun and Miraflores. This may occur as a consequence of increased traffic and sizes of vessels, use of lateral water saving basins (to save lockage water), and anticipated structural modifications, which include an additional set of locks to accommodate larger Post-Panamax vessels. The proposed locks would be larger in plan dimensions and provide a deeper draft for the transiting vessels than the existing locks in order to take advantage of new markets and economies of shipping for the shipping industry. Lake Gatun is adjacent to the upper lift of locks on the Atlantic and Pacific sides of the Canal and Lake Miraflores separates the upper lift from the lower two lifts of locks on the Pacific side of the Canal.

Within this context, ACP retained URS Holdings, Inc. (URS) for the execution of the contract for the Tropical Lake Ecology Assessment with Emphasis on Changes in Salinity of Lakes. More specifically, under this agreement, URS shall recommend the maximum salinity levels, which may be tolerated in the lakes mentioned above. The salinity standards must consider the current procedures for treatment of potable water in Panama withdrawn from Gatun and Madden Lakes and must also maintain the biological integrity of the freshwater ecosystems in Gatun Lake.

The terms of reference specify several intermediate products in the form of technical memoranda. In this context this is the eighth technical memorandum, which deals with the evaluation of salinity intrusion mitigation measures.

1.1 OBJECTIVE

Based on the Introduction above, the objective of this eighth technical memorandum is to present the evaluation of the salinity intrusion mitigation measures being considered for future proposed post-panamax locks operations.

1.2 BACKGROUND

The ACP has entered into several contracts with WL Delft Hydraulics (Delft), the Netherlands, to take field measurements of existing salt water concentrations and variations in the lock entrances, upward through the locks and in Gatun Lake to define existing conditions. Delft has developed a numerical model and calibrated it with the obtained readings. This model was then extended to the use of the proposed new locks and run with various ship traffic scenarios[1]. Delft also investigated the use of various salt water mitigation measures, evaluated their individual effectiveness and cost and made recommendations to the ACP for their inclusion into the numerical models. At a meeting in July 2004, Delft presented the following systems for application in the Panama Canal;

Group A – Systems that would prevent the upward migration of salt water:
System 1: Stepwise flushing of all lock chambers (dummy lockage)

[1] Please refer to Technical Memorandum 6 for a detailed discussion of the simulation model

System 2: Flushing of the middle and upper lock chambers
System 3: Flushing of the upper and lower lock chambers
System 4: Enhanced flushing of the upper and lower lock chambers
System 5: Intensive flushing of the upper lock chamber
System 6: Exchange of salt water with fresh water in the lower lock chamber

Group B – Remove salt water that has passed the locks from the forebay or lake
System 7: Drainage of salt tongue through slit in the floor
System 8: Drainage of salt water from a salt water collecting pit
System 9: Drainage of salt water from a pit with perforated floor

Group C – Systems that prevent the upward migration of salt water or reduce the salt content of the lock chambers
System 10: Pneumatic barrier

A more detailed evaluation of the following systems was made and the results presented in a Table entitled "Comparison of Systems". This Table presented a comparative evaluation of Systems 1, 2, 4, 6, 9, and 10 and also included an evaluation of the desalinization process to purify water.

The ACP preferred mitigation measures were incorporated into the models and run to provide indications of the possibility of salt water intrusion through the proposed and existing locks and into Gatun and Miraflores Lakes. The results of these investigations are contained in the Delft Report and were presented to the ACP. The ACP has made some preferences for the use of certain salt water mitigation measures and has narrowed the scope of investigations and analyses to four systems, Systems 1, 2, 9 and 10. These systems are evaluated herein later in this Technical Memorandum.

This Technical Memorandum presents the review of the ACP preferred salt water intrusion mitigation measures, four systems, as investigated in the "Salt Water Intrusion Analysis, Panama Canal Locks, Report F", dated January 2005 and prepared by WL Delft Hydraulics. This review makes use of the information contained therein, especially the information on the projects in the Netherlands, provided by the Ministry of Public Works, that are using salt water mitigation methods, and reports prepared by the Seattle District, Corps of Engineers Lake Washington Salinity Control Measures – 1982; U. S. Army Engineer Waterways Experiment Station, Mixing of Salinity-Stratified Water by Pneumatic Barriers; and U.S. Army Corps of Engineers, Engineer Research and Development Center (ERDC), Salinity Intrusion in the Panama Canal. This Technical Memorandum also proposes other methods for consideration.

1.3 STRUCTURE

This Technical Memorandum has been organized in a manner that is consistent with the objectives of the document and that presents a clear and concise evaluation of the saltwater intrusion simulation work performed to date and recommendations for additional considerations. The structure of the document is briefly discussed in the next paragraphs.

Introduction. This introductory section contains a general description of the work to be carried out by URS as well as the objective, and structure for the Technical Memorandum. In addition, background information that explains the various documents reviewed is also given.

Evaluation. This section is the primary result of Task 8 of the project and presents the results of the evaluation of saltwater intrusion mitigation measures.

Conclusions and Recommendations. This section presents the conclusions that may be derived from the analysis, as well as the recommendations associated to possible mitigation schemes that may be of interest to ACP.

Bibliography. A list of relevant documents consulted during the preparation of this Technical Memorandum is presented in this section.

2.0 REVIEW OF MITIGATION MEASURES

2.1 OVERVIEW OF MITIGATION MEASURES

As presented in the referenced ERDC report, listed herein in Section 1.2, on Salinity Intrusion in the Panama Canal, the mitigation measures to remove or lessen the transfer of salt water into a fresh water body can be classified as the following:

Flushing the Canal with Fresh Water. This method allows the salt water to enter the Canal locks and then flushing the intruded area(s) with fresh water to reduce the salt water concentration level or to flush the lock chamber in its entirety. This method would need to be used in combination with another method to be effective in practical use in the Canal. This method was considered as Systems 1, 2, 3, 4, and 5 by the October 2004 Delft Report.

Pneumatic Barriers. This is a curtain of air bubbles which when properly designed reduces the magnitude of exchange currents and limits the migration of salt water into the protected area. In use in the Canal, the effectiveness of this method would be reduced by the passage of the very large ships through the curtain and exchange of displaced volume of water of the submerged portion of the ship but still have significant value. This method has been used extensively in the Netherlands in combination with other mitigation measures and has been successful. Its effectiveness is decreased with depth and has not been used to the depths needed in the Canal. This measure may be expensive to operate and maintain and even more so at greater depths. Additional design and testing would need to be done to determine its suitability of use and effectiveness. This was considered as System 10 by the October 2004 Delft Report.

Water Barriers. This is essentially the same as a pneumatic barrier but uses water as the medium in place of air. This has not been used in practical applications. The point source of the water to be used needs to be carefully chosen so as to not increase the salinity levels on the protected side of the barrier. This concept has been evaluated and discarded by ACP.

Selective Withdrawal of Salt Water During Intrusion. This process involves the withdrawal of salt water through a slot in the bottom of the lock where the lock meets the adjoining fresh water basin. This was considered as System 7 by the October 2004 Delft Report.

Selective Withdrawal of Salt Water after Intrusion. In this mitigation measure, salt water is collected in a deepened part of the Canal, of sufficient depth to capture the salt water, and selectively withdrawn and discharged to an area that will not intrude the Lake water supply. Generally more water is withdrawn than with other methods. Salt water will also pass on to the Canal and would need to be removed by other methods. This method, was accidentally installed in Chittenden Locks in Seattle, Washington, when piping was placed to better distribute the water intake for the fish ladder. A positive effect was noticed in the amount of saltwater intrusion after the installation of this system. It is used to prevent salt water intrusion into Lake Washington and is used with a movable barrier. This was considered as Systems 8 and 9 by the October 2004 Delft Report.

Equalization by Pumping. This involves removing the intruded salt water by pumping and was considered as System 6 in the October 2004 Delft Report. This may have application as discussed in Section 3.2 of this Technical memorandum.

Exchanging while Lock Gates are Closed. This process involves removing the salt water and exchanging it with fresh water after the lock gates are closed. There are variations of this methodology and this has been proposed for use with the new locks. This is similar to the considerations made by the October 2004 Delft Report as Systems 1, 2 and 3.

Movable Sill. This method involves the use of a movable gate or sill adjusted to the draft of the ships. As a fixed barrier, it may have applicability but will involve deepening a portion of the Canal and will need to be used with another methodology. Experience with this type of system has been unfavorable at Chittenden Locks.

Simultaneous Exchange of Salt and Fresh Water. This involves perforating the floor of the lock and removing the denser salt water while replacing it with fresh water. The lock gates are closed and the fresh water needs to be introduced in a manner that reduces mixing of the water. Construction costs are high but the effectiveness can be substantial. This methodology has been used at Mardyck at Dunkirk, France, and at Kreekak in the Netherlands.

Canal Gate. This would entail providing two or more deep basins and a gate at the fresh water end of the Canal for temporarily trapping salt water. This would need to be used in combination with other methods and the traps would have to be periodically cleaned to remove the trapped salt water. Other methods are more effective as it involves the exchange of a large amount of fresh water. This is further explained in the referenced ERDC Report "Salinity Intrusion in the Panama Canal."

ACP selected 6 of the options evaluated by Delft in their October 2004 Report for further investigation by the Ministry of Public Works of Holland. After evaluating the results of that investigation, ACP selected four (4) types of systems to simulate. The results of the simulation of these four (4) systems are presented in the Delft Report F.

2.1.1 Consideration of Preferred Mitigation Methodologies

Delft has proceeded with the experience that it has with the many existing locks that use saltwater mitigation methodologies in the Netherlands. This is a great benefit in evaluating methodologies and providing measures for consideration. However, as Delft notes in Report F, the Canal is unique in that it has a fresh water source at a much higher elevation difference than those projects existing and has multiple locks in three steps with varying entrance conditions. Work from the existing locks is not directly transferable and has a magnification of scale which increases the amount of water to be transferred and substantially increases the flow velocities and water mixing, thus increasing the problem and limiting solutions.

In addition, there is some similarity between the existing locks and the proposed new locks, but there are also differences. The Pacific side locks are in three steps, but they are separated by Miraflores Lake which has two locks or lifts below it and one lock, Pedro Miguel, above it. The Rio Grande River flows into Lake Miraflores and Miraflores Spillway controls the elevation of the Lake within a small variation to accommodate exit and entry conditions at the locks. There is also a large tidal variation on the Pacific side of the Canal. At the Atlantic side locks, they are in three steps, similar to the proposed locks, but do have a small tidal variation. Operational traffic patterns are also very different.

Once ACP reviewed the results of various evaluations for the different types of mitigation systems being considered, the list was narrowed down to seven; a) stepwise flushing of all

lock chambers (dummy lockage); b) flushing of middle and upper lock; c) enhanced flushing of upper and lower lock chamber; d) exchange of salt water with fresh water in lower lock chamber; e) catch salt water in a deep upstream pit and drain the salt water away to the tailbay; f) pneumatic barrier at the entrance to lower lock and upper lock; and g) desalinization of intruded salt water. The October 2004 Report compares these seven systems and provides a ranking based on the effectiveness, total water loss, navigational delays, hinderance for shipping, complexity of system, and cost (see figure below).

Figure 2-1
Comparison of Mitigation Systems

Aspect	*System 1*	*System 2*	*System 4*	*System 6*	*System 9*	*System 10*	*Desali-nation*
effectiveness	72	86	94	85	85	20	100
total water loss	150	150	200	180	160	100	120
delay for shipping expected	not likely	most probably	most probably	yes	no	no	no
hindrance for shipping expected	little	little	little	possibly transverse forces on ship	no	little for small yachts	no
complexity of system / ease of operation	simple	not complex	not complex; negative head gates	complex; careful operation	not complex	simple	not complex
cost amplifier	0.00	1.05	1.10	1.48	1.40	1.02	> 10 ?? high energy cost!

Source: Delft, October 2004, Table 3.2 Comparison of Mitigation Systems

ACP selected 6 of the options evaluated by Delft in their October 2004 Report for further investigation by the Ministry of Public Works of Holland. After evaluating the results of that investigation, ACP selected four (4) types of systems to simulate. The results of the simulation of these four (4) systems are presented in the Delft Report F.

Mitigation System I – stepwise flushing of all lock chambers (dummy lock)
Mitigation System II – flushing of middle and upper lock chamber
Mitigation System III – flushing of salt water from pit
Mitigation System IV – pneumatic barrier at the entrance to the lower and upper lock chamber.

These four systems are evaluated below.

2.1.2 Assessment of Preferred Mitigation Methodologies

The following presents an assessment of the four preferred salt water intrusion mitigation methodologies as selected by the ACP and offers additional considerations and comments.

In evaluating the individual Systems, consideration was given to the expected levels of salinity concentration in the individual chamber levels as presented in the Delft Reports. The lower chamber is expected to have salinity concentration of 20 to 28 ppt, the middle chamber

of 1 to 10 ppt, an the upper chamber of 0.1 to 2.5 ppt. Reduction in salt level would be more effective in the lower two levels.

System I – Step-wise flushing of all lock chambers (dummy lockage).

This System consists of drawing water from Gatun Lake and progressively passing the lockage water downward through the upper, middle and lower lock levels, as in a normal downlockage. This introduces fresh water into the System and lowers the volume averaged salinity levels. This is essentially a dummy lockage and can be used after an uplockage or downlockage. This system is shown diagrammatically as System I in Appendix A.

This system is the easiest and most straight forward to utilize. It does not require any additional costs. It would be used as a dummy lockage without the operation of water saving basins. Using the water savings basins increases the volume averaged salt water concentration and effectiveness in an individual chamber but reduces the amount of non-efficient water, water not used to transit a ship, required to perform the dummy lockage. Non-operation of the water saving basins increases the fresh water required to perform the dummy lockage but reduces the volume averaged level of salt water in each lock chamber. This would be sensitive to the water available in the Canal watershed and in wet years, with high fresh water availability, and low transit levels, would be the preferred option. No additional construction costs are involved, however this system may delay Canal transits especially at high levels of usage. This system would reduce the volume averaged salinity levels in each chamber by about one-third, being most effective in the lower chamber.

System II – Flushing of middle and upper lock chamber.

This System consists of lowering the level of the middle chamber to the low level of the lower chamber by passing the water through an additional valve to the tailbay. The upper chamber is then leveled to the low level of the middle chamber and fresh water is drawn in from Gatun Lake to establish the high level of the upper chamber. This System is shown diagrammatically as System II in Appendix A.

This system is a variation of System I and is effective in reducing the volume averaged salt levels in the middle and upper chambers. The water with the lowest salt content is withdrawn and passed downward to the middle chamber. It is not clear why there is a need to construct the outlet from the middle chamber to the tailbay at an additional cost. This same effect can be accomplished by leveling the middle chamber to the level in the lower chamber and tailbay by opening the lower control valves and allowing the two lock chamber levels to self-level to the tailbay, essentially System I. The water saving basins would not be operated as described for System I with similar salt water concentrations. This System would not have an overall effectiveness as good as System I. The effect would be to reduce the level of salt concentration in the top two chambers by about one-third but have minimal effect on the highest concentration of salt water in the lowest chamber. The subsequent use of the water saving basins would reduce the effectiveness of this system.

System III – Flushing of salt water from pit with a perforated floor.

In this System, a pit would be constructed just outside of the upper lock and catch the salt water that has accumulated in the upper chamber when the gates are opened. The pit would then be drained through the floor using an auxiliary outlet system that would pass across the

length of the lock chambers and discharge into the tailbay. This system is shown diagrammatically as System III in Appendix A.

The use of a perforated floor is more effective when it is located in the bottom of the lock chamber but would be very expensive for these locks. This system would be the most costly of all of the preferred systems considered because of the location of the upper lock water intakes and entrance walls at the sides of the pit. The pit would require an expensive structure on three sides, at depth, and ancillary facilities to discharge the water. Special attention would need to be made to possible navigation delays as the salt wedge would need to be almost completely drained out of the lock and pit prior to a ship moving over the pit and into the lock. The total time required to drain the salt wedge could be about 20 to 30 minutes, 10 - 15 minutes to drain the low salt concentration water from the lock and an additional 10-15 minutes to drain the pit. The salt water would also have to be drained from the pit before a ship is passed over it in order to avoid the mixing action of the ship's propeller to have maximum effectiveness. This removes salt that has passed the three lock levels and does not have an overall significant effect on all three lock levels because of the low levels of accumulated salinity. This is more of a system safeguard and can be operated only when concentration of salt intruded water exceeds the permissible limits. Monitoring would be required.

System IV – Pneumatic barrier at the entrance to the lower lock.

This System consists of providing a pneumatic barrier (air curtain) at the entrance to the lower lock in the tailbay. Its function is to provide a medium that prevents the upstream movement of heavily laden salt (sea) water into the tailbay and lower lock chamber by setting up a circulating current. This current moves the water from the bottom to near the top of the surface and away from the lock. It also keeps the lesser laden salt water in the tailbay and lower lock chamber. The discharge from the lock operation moves lesser laden salt water into the tailbay and ocean channel. This system is shown diagrammatically as System IV in Appendix A.

This is a system that is expensive to operate and maintain but in combination with another correctly chosen system, may have a very high degree of effectiveness. The Canal locks have a benefit in that they pass the water downward. The discharge from the bottom lock chamber empties into the tailbay and drives the salt laden sea water to a distance from the bottom lock entrance depending on the intensity of the transit operations. As long as the discharge is regular, the sea water is kept at a distance from the entrance. A pneumatic curtain would be beneficial in maintaining the sea water at a distance from the lock entrance and could possibly be operated part time. This would minimize the flow of sea salt water into the tailbay and lower lock chamber and keep the volume average salt concentration in the lower lock at a minimum in the migration of the salt water upward through the locks. The barrier needs to be correctly located to take advantage of the discharge from the lower lock chamber and to minimize the transfer of salt water due to ship passage through the barrier. The effectives of this system is considered to have a reduction in the salt concentration in the lower chamber of about up to one-half .

At the entrance to the upper lock chamber, the situation is different. Water intake into the locks for lock operations has an effect of sucking-out some of the salt water that intrudes into the Lake and passes it down through the locks. A pneumatic curtain may be effective in confining some of the salt water that may intrude into the Lake but it will also dilute the

bottom salt water from the upper chamber by the mixing action of the pneumatic curtain and ship movements. This system may be more effective with a design that contains the salt water at the bottom of the channel as with the pit, and then with proper location of the lock intakes, can withdraw the bottom salt water for lock operations.

3.0 CONCLUSIONS AND RECOMMENDATIONS

3.1 CONCLUSIONS

The Panama Canal Lock system is a unique system and although existing mitigation measures can be adapted for use in the Canal, the uniqueness and much larger scale of the proposed new locks requires special and additional design and model testing to provide an efficient system. The systems that have been identified as the four preferred systems should be considered for use in the Canal. The use of the salt pit may prove to be costly and provide minimal benefit as it only has an effect of salt water with a low concentration and is basically a system safeguard. Other methodologies that address blocks of salt water with higher levels of salt concentration are more beneficial in reducing the level of intrusion. On the other hand, ACP should be careful about discarding possible mitigation measures like the Saltwater Pit until the effect that various operation and financial scenarios may have on navigation, salinity and water consumption is fully understood. In addition, other methodologies as identified in this Section should be considered for future evaluation. The ACP is correct in having a preferred salt water mitigation option but it should consider the application of several options or combination of options as explained herein.

It has been noted that the new Canal locks will initially open for use with a limited number of transits, probably about 5 Panamax-Plus and Post-Panamax ships. Traffic will not grow rapidly and there will be some transfer of Panamax-Plus ship transits from the existing locks, thus reducing transits through the existing locks. Also, ship beam and length will be smaller for the ships initially than in later years. During this early period, salt water intrusion is not expected to be a problem and the system should have minimum salt water intrusion levels through the new locks into Gatun Lake, with salt concentration levels similar to the existing locks. This is noted in Report F.

This early period after the initial opening of the new locks should be used to gather measurements of salt water intrusion level readings at various traffic and seasonal patterns in the lock entrances, through the locks, water savings basins, and Gatun Lake. Various traffic scenarios, with and without water savings basins, could be used as well as taking measurements at various times of the year. These measurements should be set into the simulation model, the model adjusted or recalibrated as necessary, and future scenarios run. Pumping of water to simulate scenarios for testing or other methods could be used to exchange water to investigate various salt water mitigation configurations that were not placed in the original construction. Experiments could also be performed with a pneumatic curtain or water barrier to test their effectiveness.

Based on these prototype investigations, the ACP could select the salt water mitigation method or combination of methods that best serve the new Canal. This may be an extremely important consideration in satisfying the environmental community, i.e., perform field tests and making adjustments in the new locks to provide the best operating procedures.

3.2 RECOMMENDATIONS

This section presents recommendations based on the review of the mitigation systems evaluated in the various reports reviewed by URS (see bibliography). Within the context of the Tropical Lake Evaluation Project for which URS was retained, the objective is to present additional possibilities that in the opinion of URS should be considered during future

evaluations, and to present additional recommendations that may serve useful to ACP. The scope of work for the Tropical Lake Evaluation Project included the evaluation of mitigation systems and the recommendation / suggestion of ideas that may improve upon the work carried to date. However, it was not the intent of this project to develop and substantiate with engineering data and calculations the opinions of the specialists that reviewed the mitigation measures.

3.2.1 Mitigation Measures for Consideration

In reviewing the salt water mitigation measures considered, several possibilities came to mind that are worthy of consideration. These are in addition to the excellent work performed by Delft and may provide enhancements to the salt water mitigation measures proposed.

3.2.1.1 Flushing of the Water Savings Basins

In consideration of the flushing of the lock chambers, no "special" consideration was given to the water contained in the water saving basins. In actual practice, the water in the basins represents first-drawn bottom water which will have a slightly higher salt concentration than that used as the volume averaged salt concentration in the transfer of water through the locks. Delft notes in Report F "salt concentration of the water in the water savings basins is, generally, also higher than the water in the adjacent higher lock, causing less dilution of the water in the receiving lock chamber." This all represents 60% saved water in the lockage operations and its exchange will be essentially a 60% lockage water loss or no saved water for a specific lockage.

Consideration should be given to the downward exchange of water in the basins similar to the dummy lockage but directly from water saving basin-to-water saving basin as diagrammatically shown for Basin-to-Basin Water Transfer in Appendix A. Connections will need to be provided to pass fresh water from the lake to the top most set of water saving basins and then similarly located basin-to-basin transfer of water. Because of the reduction of salt concentration at a particular lock level, this will provide a lower volume averaged salt concentration in the transferred lock level by about one-fourth and be system wide. This could be very effective at a small increase in construction costs and will not delay transits. The transfers can be made between lockages.

3.2.1.2 Diagonal Transfer from Water Saving Basins

This system would be essentially as described previously but provide for the diagonal exchange of water from a water saving basin to the next lower lock chamber as shown diagrammatically for Diagonal Transfer From Basins in appendix A. Extra provisions will have to be made in the construction of new locks to accommodate this system. There would be a cost associated with this system greater than the above system. Water would be discharged from the lower water saving basins to the sea level tailbay, water from the middle water saving basins would be transferred to the lower lock chamber, and water from the upper water saving basins would be transferred to the middle lock chamber. Fresh water could be transferred to the upper water saving basins from the Lake or water could be transferred as in a normal lockage. The effect would be to reduce the volume averaged salinity level in each chamber by a greater percentage than that for basin-to-basin transfer. This could have a

significant effect in reducing the salt concentration. This may have applicability in specific scenarios which will need to be investigated.

3.2.1.3 Enhanced Flushing of the Lower Lock Chamber

This system would involve the evacuation of all water from the lower lock chamber by pumping to the tailbay as shown diagrammatically for Lower Chamber Evacuation in Appendix A. This could be accomplished at night as the larger ships would only be passing the proposed locks during the day. The gates would have to be designed to accommodate the full water head from the tailbay and middle lock chamber which should be done for the lock design. Water could be withdrawn from the Lake to have maximum effectiveness or passed from the upper two lock chambers at a reduced effectiveness. This would be used with a pneumatic curtain. The effect would be to lower the volume averaged salinity level at the starting chamber of intrusion and could lower the value by about one-half for the entire system. The overall effect would be at the maximum effectiveness.

3.2.1.4 Operational Flushing of the Upper Lock Entrance

This system would involve the construction of a shallow pit, maybe 0.9 m (3 feet) deep, of a longer length that would trap any out-flowing salt laden water into the lock entrance channel. This would be longer than the pit proposed by Delft. The pit would be in the Lake just outside the upper lock chamber as shown diagrammatically as Operational Flushing in Appendix A. This would be designed with the lock water intakes in such a location that the bottom salt water in this pit would be drawn back into the lock as lockage water. This would limit the intrusion of the salt water into the Lake areas. This would be a cheaper construction than that of the salt pit, System IV, not require a bottom discharge floor, have less excavation, and not require an outlet facility. It would have a similar effectiveness to the pit as a continuous safe guard. In essence, the existing locks function in this manner.

3.2.1.5 Flushing of the Lock Lower Entrance

This would involve the hydraulic design of the lower lock chamber outlet discharge to disperse the discharged water from the lower lock in a manner that pushes the intruding sea water at a distance from the lock entrance. This is a hydraulic design issue and would need to be modeled. Perhaps Delft has experience with this type of outlet design. Care would need to be taken in designing the discharge to not allow return currents to be established that would assist the return of sea water into the lower lock entrance through the introduction of return currents. This would need to be used with a pneumatic barrier. This would not involve any additional cost other than for the design of the outlets and be more effective than the “dummy lockage”. The costs would be involved with the design and installation of the pneumatic curtain which has been recommended by Delft. In combination, the design of the outlets and installation of the pneumatic barrier would be highly effective.

3.2.2 Additional Recommendations

The goal of these studies is to provide a predicted level of salt water intrusion through mitigation or new lock operational patterns which meet a determined acceptable level of salt water intrusion into Gatun Lake. In reviewing the work previously performed and studies accomplished by Delft, the following additional Recommendations are made:

- Design a Salt Water Mitigation Plan that considers several or a combination of the preferred or recommended mitigation systems and operating procedures that addresses various situations in the Canal and provides water quality consistent with the salinity limits recommended in Technical Memorandum, keeping in mind that these suggested limits are subject to change once more detailed evaluations are performed (i.e. bioessays).

- Perform the additional studies recommended by Delft.

- Perform more detailed evaluations of the use of water saving basins integrating the basins into the analyses. As they represent bottom drawn water, their use may be more significant than originally evaluated.

- Perform prototype field testing as described herein and recalibrate the model for use with the new locks. Correspondingly, provide adjustments in the new lock system to meet the established standards.

- Continue on a path that considers two or three systems or combination of salt water mitigation systems. Don't get set into one system that may not provide the desired results. Keep the options open for this unique system especially in the operational sense of water transfer and ship movements. The operations for ship movements may need to change in order to meet parameters for allowable salt water intrusion. Although ship operational patterns may be set at high levels of ship transits in the proposed Canal, different patterns may need to be considered at various levels of traffic intensity to minimize salt water intrusion to the lowest number possible. Initially, at low transit levels, a ship pattern of movements that employs alternating transits may be the best option for reducing salt water intrusion.

- Consider the additional salt water mitigation systems suggested herein, especially the downward transfer of water between the water saving basins and evacuation of water from the lower lock chamber.

- Operate the locks consistent with the availability of water in the watershed. The Reports note that the intrusion of salt water into the Lake is less when the water saving basins are not in use. If water is available, do not operate the water saving basins.

- Perform more detailed analyses that consider historic yearly and seasonal variations in the watershed water supply. Provide probabilistic analyses of expected periods when salt water intrusion into the Lake may exceed current levels. It can be shown that in ranking the historic records for water available in the watershed by year and considering the year 1947, which represents the year with water availability that is about 75% exceeded, the Lake will initially be at the full operational level at the beginning of the year and using a withdrawal of 70 lockages of water per day, the Lake will refill at the end of the year. An analysis of this form will give a probability of use of water saving basins, lake levels and thus, probability of salt levels.

4.0 BIBLIOGRAPHY

Document Name	Author	Year	Source of Information
Mixing of Salinity Stratified Water by Pneumatic Barriers, Report 1, Research Report H-73-4, U.S. Army Engineer Waterways Experiment Station, Vicksburg, Mississippi.	McAnally, W.H., Jr.	1973	USACE Engineer Research and Development Center
Lake Washington Salinity Control Measures - 1982, Seattle District	U.S. Army Corps of Engineers	1986	Seattle District USACE
Salinity Intrusion in the Panama Canal, U.S.Army Corps of Engineers, Engineer Research and Development Center, Vicksburg, Mississippi.	Parchure, T. M., Steven C. Wilhelms, Soraya Sarruff, and William H. McAnally	2000	Panama Canal Authority
Salt Water Intrusion Analysis, Panama Canal Locks. Report F: Study, modeling and analysis of salt water intrusion mitigation systems for revised 3-lift lock configurations.	Delft Hydraulics	January 2005	Panama Canal Authority

Appendix A
System Diagrams

MITIGATION SYSTEM I
STEPWISE FLUSHING OF ALL LOCK CHAMBERS (SYSTEM 1)

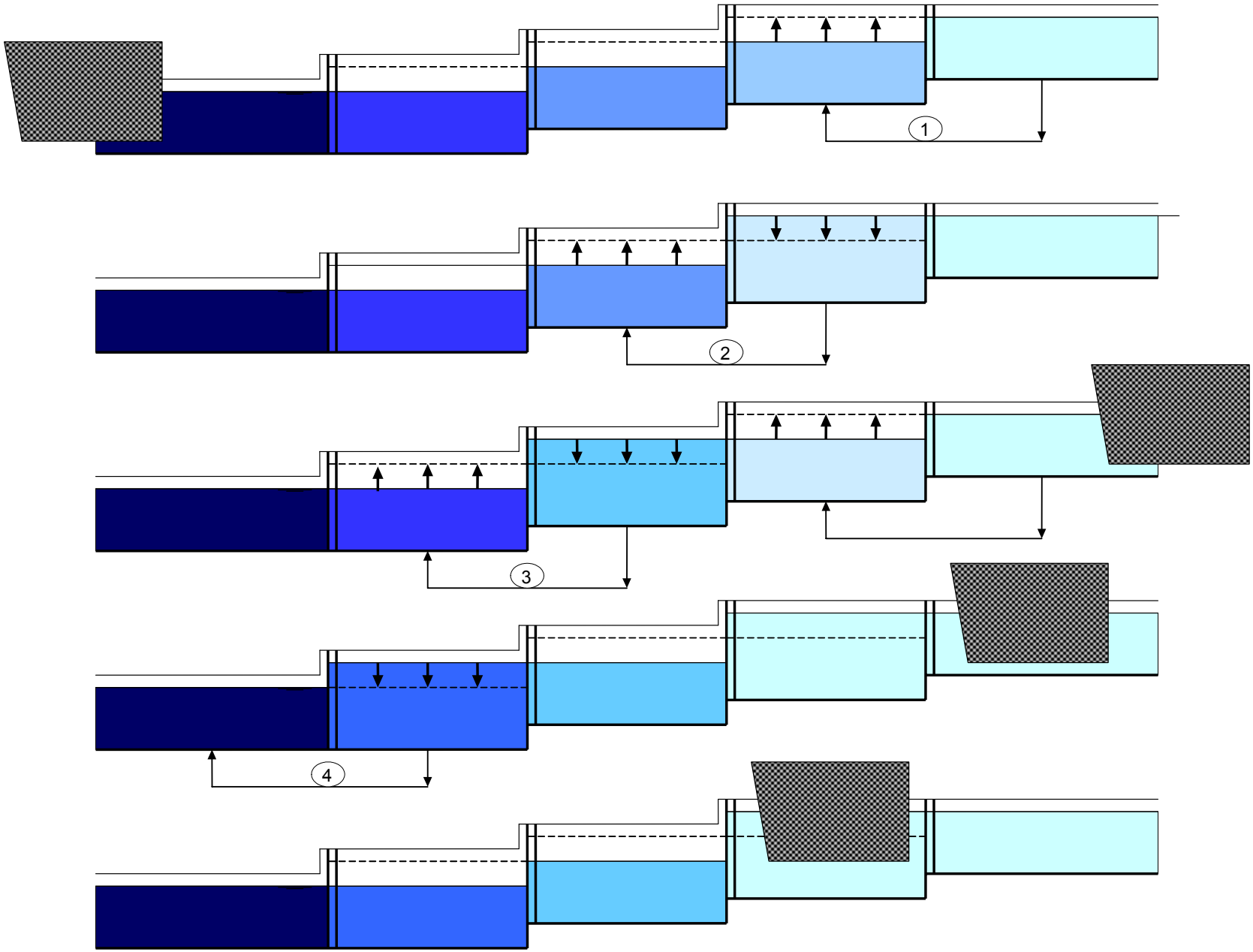

MITIGATION SYSTEM II
FLUSHING OF MIDDLE LOCK AND UPPER LOCK (SYSTEM 2)

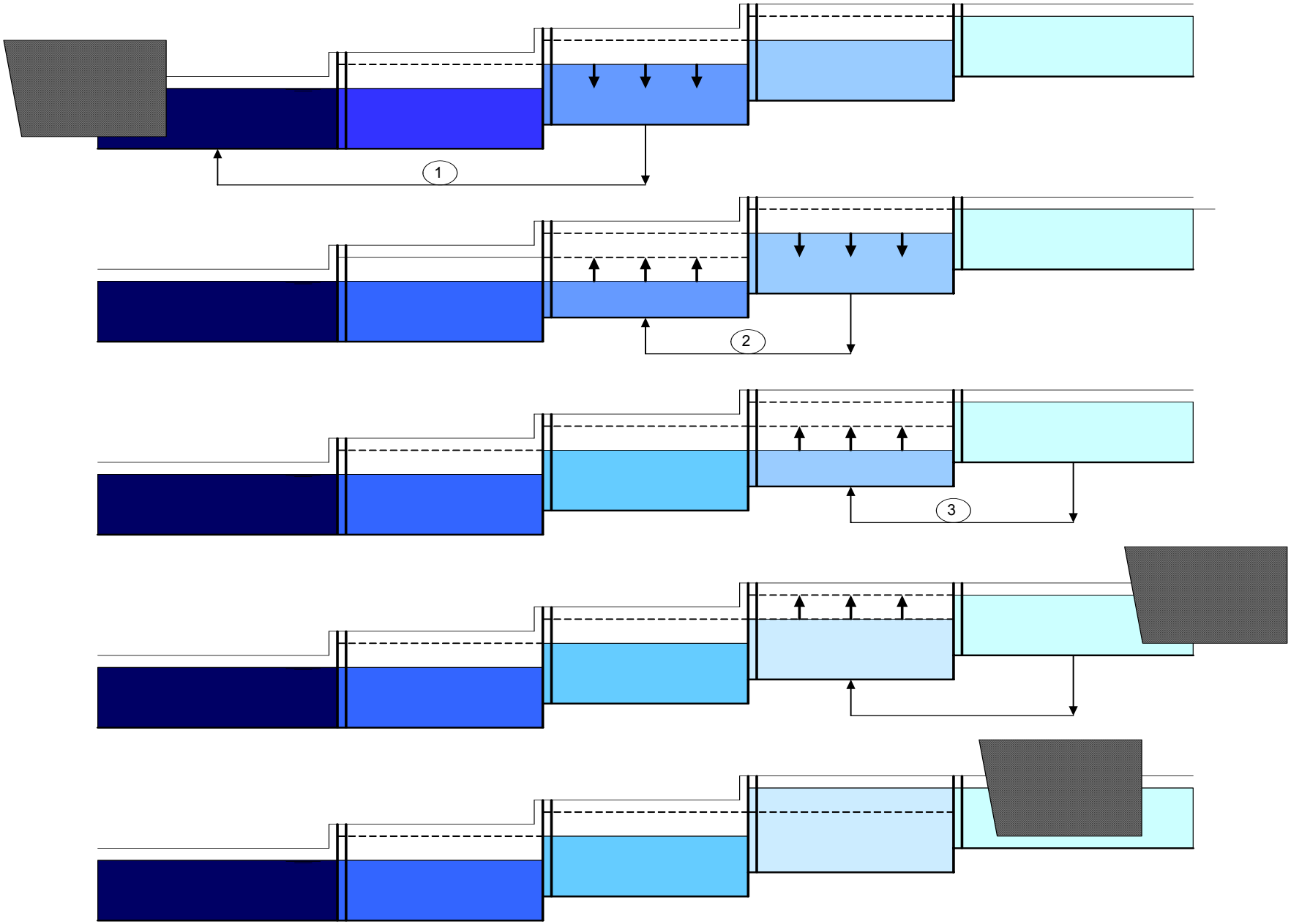

MITIGATION SYSTEM III
DRAINAGE OF SALT WATER FROM A SALT PIT AT THE UPSTREAM SIDE OF UPPER LOCK (SYSTEM 9)

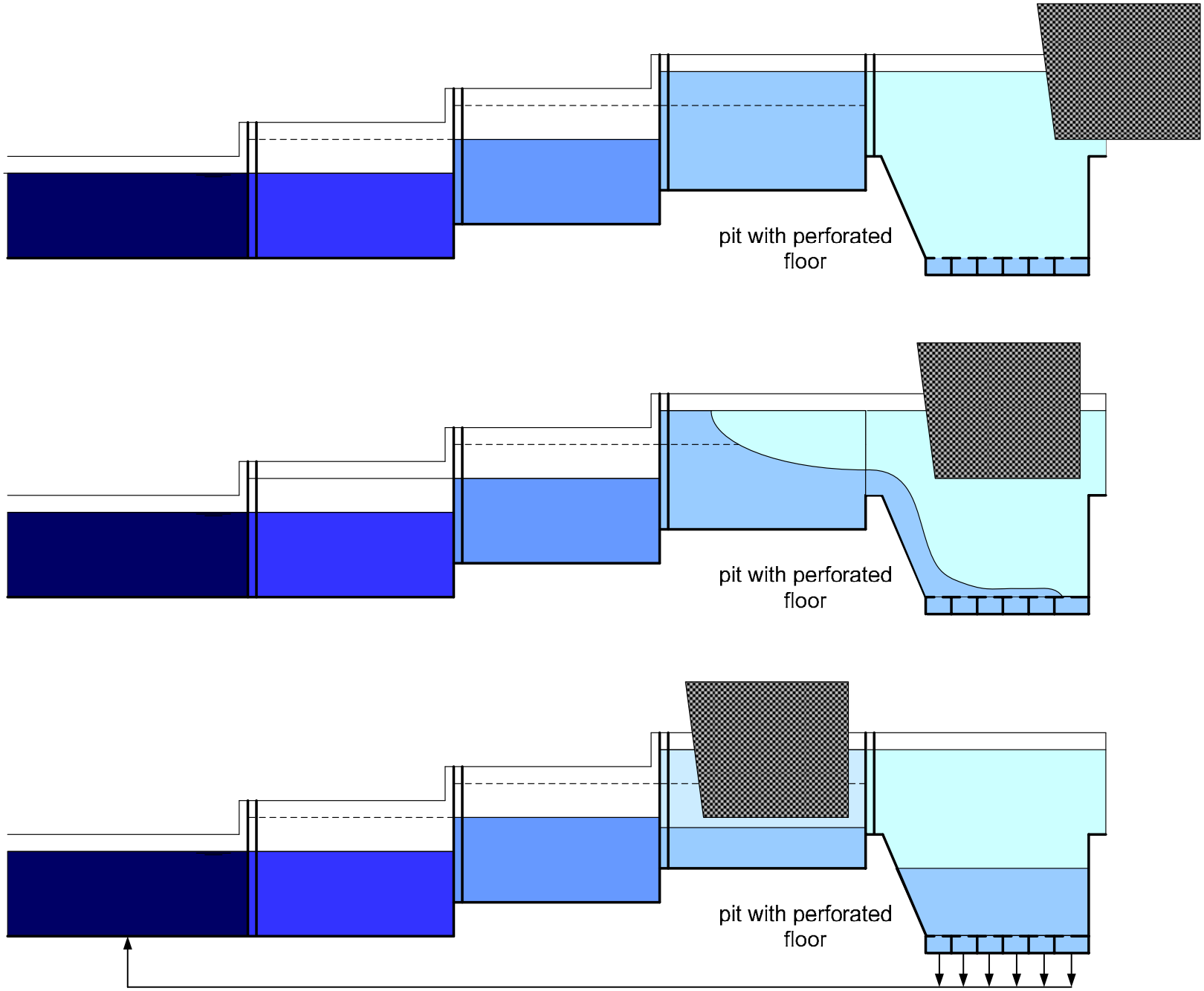

MITIGATION SYSTEM IV
PNEUMATIC BARRIERS AT ENTRANCE OF LOWER LOCK AND UPPER LOCK (SYSTEM 10)

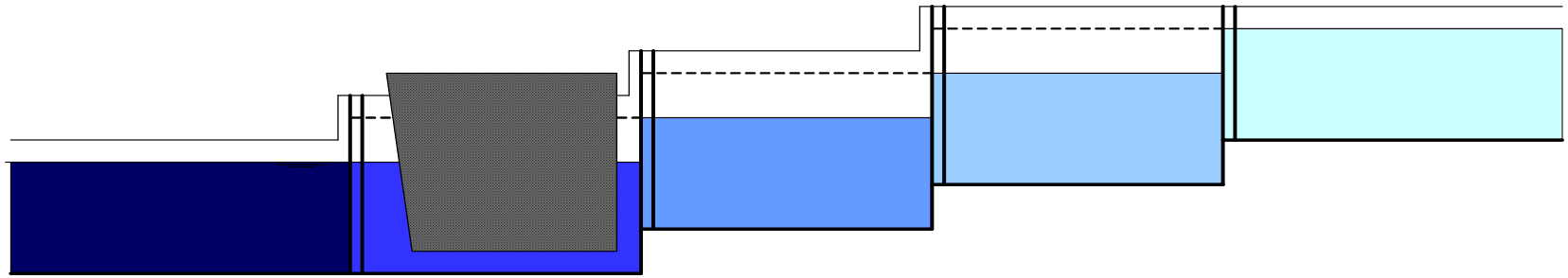

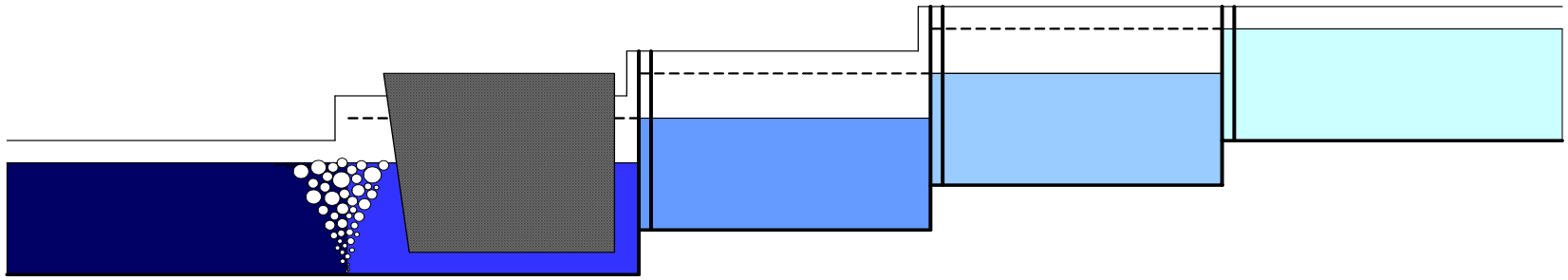

air bubble screen

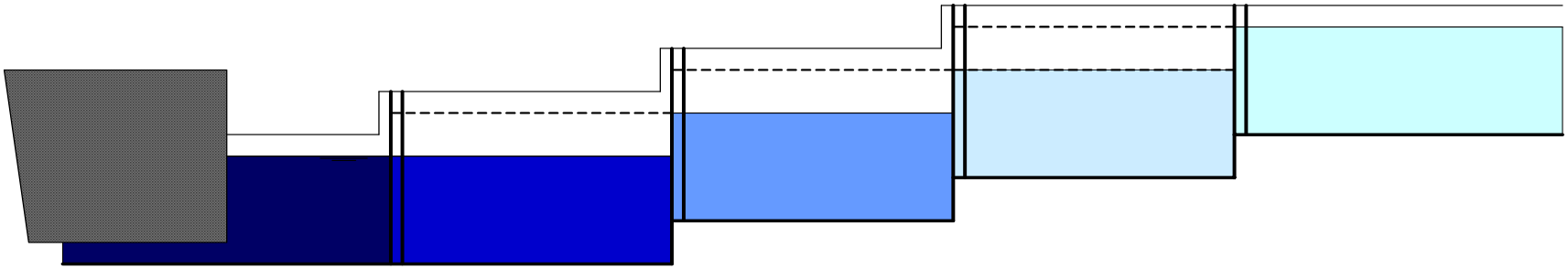

BASIN-TO-BASIN WATER TRANSFER

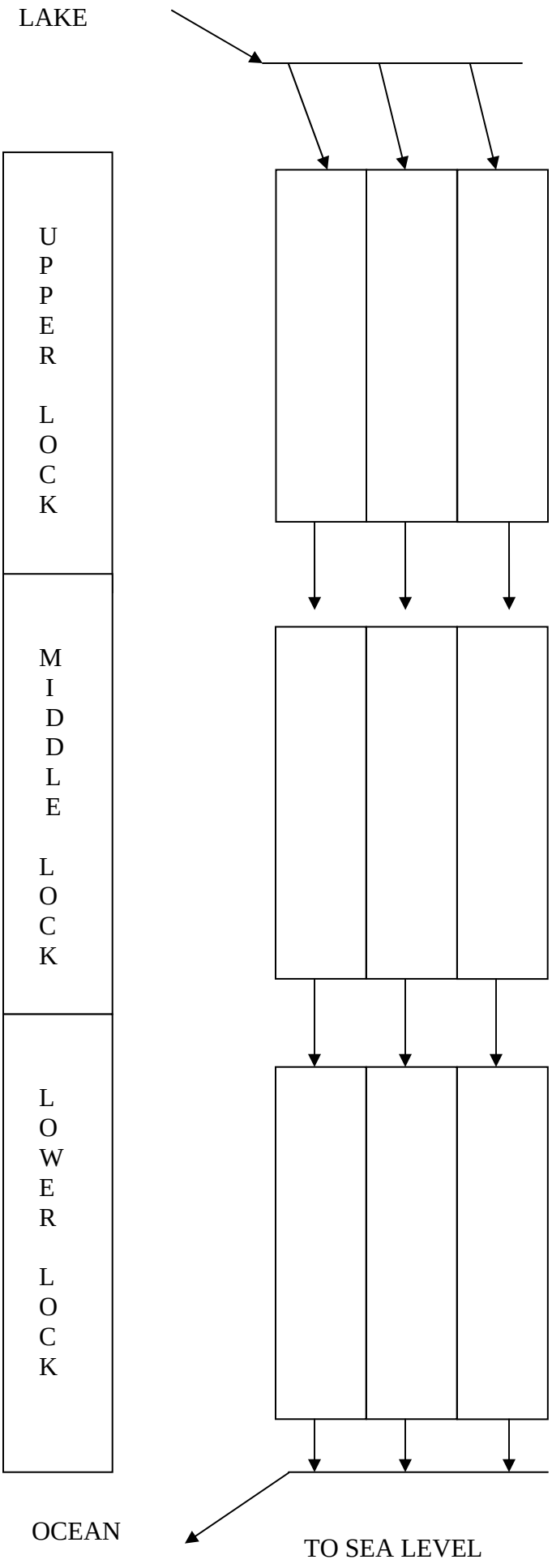

1. Empty lake with water from the lower WSB to the sea level.

2. Transfer the water from the middle WSB to the lower WSM.

3. Transfer the water from the upper WSB to the middle WSB.

4. Fill the upper WSB with fresh water from the lake.

DIAGONAL TRANSFER FROM BASINS

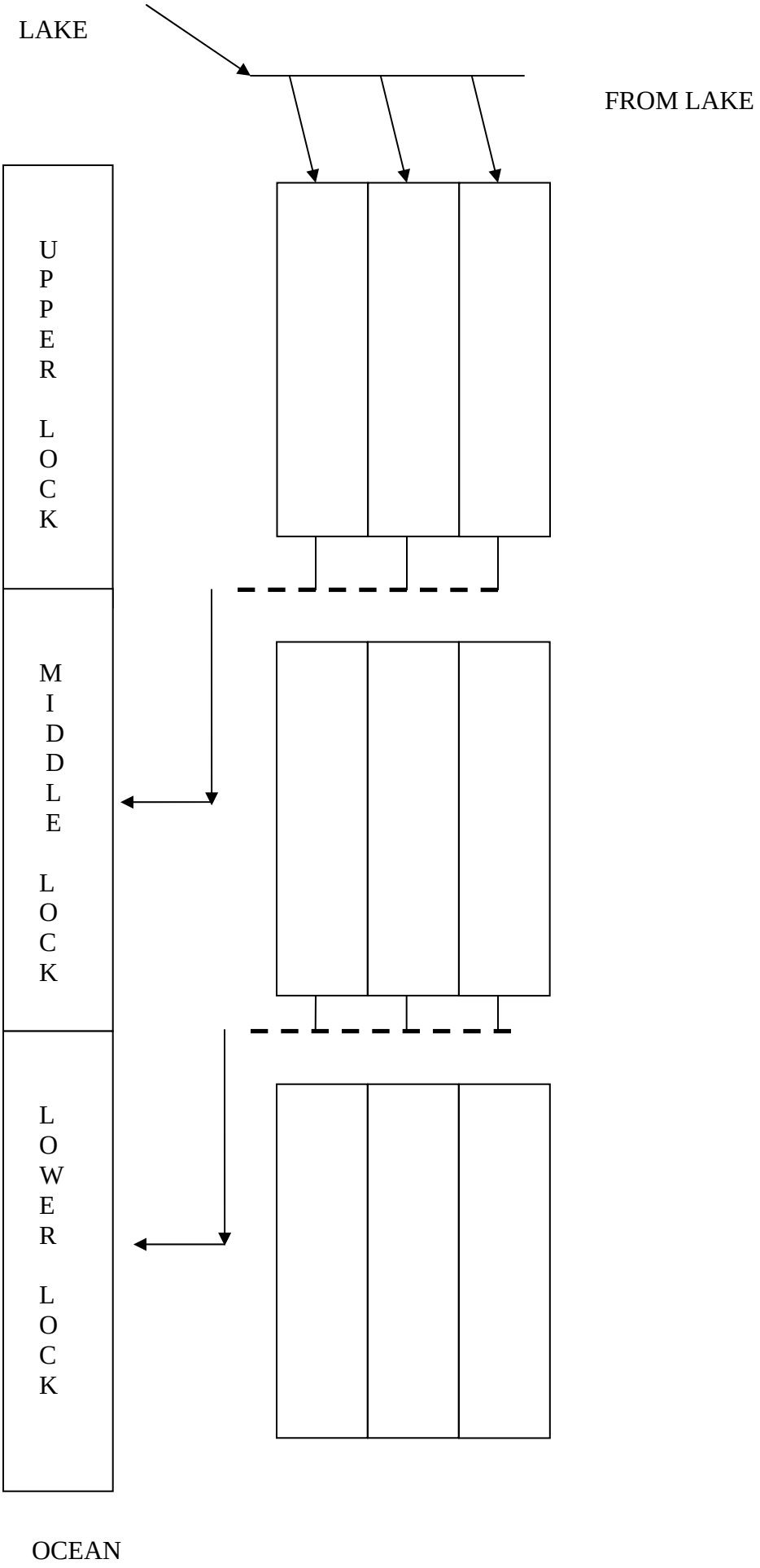

LOWER CHAMBER EVACUATION

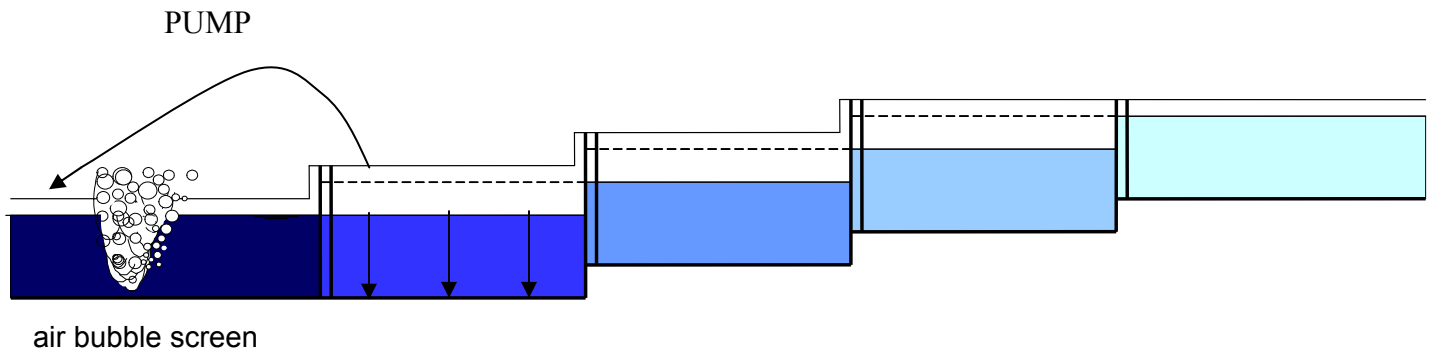

LOWER CHAMBER EVACUATION
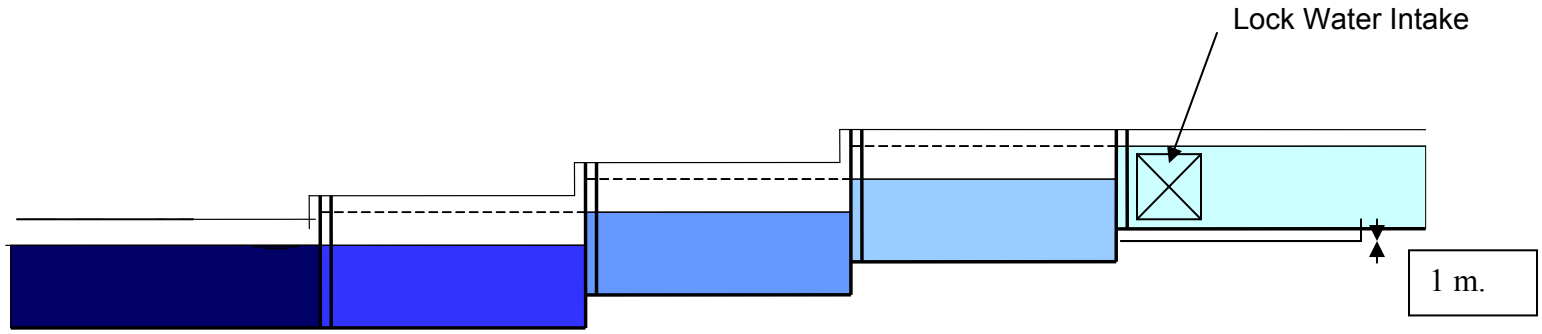
OPERATIONAL FLUSHING