Tropical Lake Ecology Assessment
With Emphasis on Changes in
Salinity of Lakes
Project No.SAA-140714
Technical Memorandum # 4
Flora and Fauna Sampling Plan

Prepared for:
Panama Canal Authority

Prepared by:
URS Holdings, Inc.

Panama – January, 2005

TABLE OF CONTENTS

1.0 INTRODUCTION....1-1
1.1 OBJECTIVE....1-1
1.2 BACKGROUND....1-1
1.3 STRUCTURE....1-2

2.0 FLORA AND FAUNA SAMPLING PROGRAM....2-1
2.1 SELECTION OF SAMPLING SITES....2-1
2.1.1 Gatún Lake....2-1
2.1.2 Miraflores Lake....2-1
2.2 FLORA SAMPLING PROGRAM....2-2
2.2.1 Phytoplankton....2-2
2.2.2 Macrophytes....2-5
2.3 FAUNA SAMPLING PROGRAM....2-6
2.3.1 Zooplankton....2-6
2.3.2 Benthos....2-9
2.3.3 Fish....2-12
2.3.4 Macroinvertebrates....2-13
2.4 MONITORING SCHEDULE....2-15
2.5 COST....2-16

3.0 ORGANIZATIONS....3-1

4.0 BIBLIOGRAPHY....4-1
4.1 PHYTOPLANKTON AND PHYTOBENTHOS....4-1
4.2 ZOOPLANKTON....4-3
4.3 BENTHOS....4-3
4.4 MACROINVERTEBRATE....4-3
4.5 FISH....4-4
4.6 AQUATIC MACROPHYTES....4-5
4.7 AQUATIC INSECTS....4-5

ATTACHMENT

1.0 INTRODUCTION

The Panama Canal Authority (ACP) is currently performing a series of studies to assess the feasibility of a new set of locks, alternative systems to raise and lower vessels, and upgrading the navigation channel to prepare a Master Plan for the Modernization and Expansion of the Canal. Part of these studies include the analysis of risks to increase the salinity of the lakes Gatun and Miraflores. This may occur as a consequence of increased traffic, lateral water saving basins, and anticipated structural modifications, which include an additional set of locks to accommodate larger Post-Panamax vessels. Lake Gatun is adjacent to the locks on the Atlantic and Pacific sides of the Canal and Miraflores Lake is adjacent to the locks on the Pacific side of the Canal.

Within this context, ACP retained URS Holdings, Inc. (URS) for the execution of the contract for the Tropical Lake Ecology Assessment with Emphasis on Changes in Salinity of Lakes. More specifically, under this agreement, URS shall recommend the maximum salinity levels, which may be tolerated in the lakes mentioned above. The salinity standards must consider the current procedures for treatment of potable water in Panama and must also maintain the biological integrity of freshwater ecosystems.

The terms of reference specify several intermediate products in the form of technical memoranda. In this context this is the fourth technical memorandum, which deals with the preparation of the sampling programs to identify, asses and compare the viability of existing flora and fauna in Gatun Lake, its tributaries and Miraflores Lake in accordance to the terms of reference for this contract.

1.1 OBJECTIVE

Based on the previous paragraphs, the objective of this fourth technical memorandum is to present a sampling program for the flora and fauna in lakes Gatun and Miraflores that includes proposed monitoring sites, field and laboratory methodologies, as well as reporting and data management requirements.

1.2 BACKGROUND

During the preparation of this Technical Memorandum, published literature as well as consulting studies was reviewed to develop the flora and fauna sampling program for Gatun and Miraflores Lakes. The most important sources of information consulted, due to their content, clarity and/or subject matter, are listed below:

Table 1-1
List of Most Relevant Sources of Information

Document Name	Author	Year	Source of Information
Protocols for Measuring Biodiversity: Phytoplankton in Freshwater, Sampling and Laboratory Procedures.	Findlay, D. L & Kling, H. J.	2001	Ecological Monitoring and Assessment Network. http://www.eman-rese.ca/eman/ecotools/protocols/freshwater/
Protocols for Measuring Biodiversity: Zooplankton in Fresh Waters, Sampling and Laboratory Procedures.	Paterson, M.	2001	Ecological Monitoring and Assessment Network. http://www.eman-rese.ca/eman/ecotools/protocols/freshwater/
Protocols for Measuring Biodiversity: Benthic Macroinvertebrates in Fresh Waters, Sampling and Laboratory Procedures..	Rosenberg, D.M.; et al.	2001	Ecological Monitoring and Assessment Network. http://www.eman-rese.ca/eman/ecotools/protocols/freshwater/

Document Name	Author	Year	Source of Information
Sampling Zooplankton in Lakes.	Galbraith, M.G. & Schneider, J.	2000	Chapter 18 in Schneider, James C. (ed.). Manual of Fisheries survey methods II: with periodic updates
Standard Operating Procedure for Zooplankton Analysis.	Grace Analytical Lab.	2003	http://www.epa.gov/glnpo/lmmb /methods/zoo.pdf
Analysis of USGS NAWQA Program Phytoplankton Samples.	Fran Acker	2002	Charles, D.F., C. Knowles, and R.S. Davis, eds. 2002. Protocols for the analysis of algal samples collected as part of the U.S. Geological Survey National Water-Quality Assessment Program. The Academy of Natural Sciences, Philadelphia, PA. 124 pp. Also at http://diatom.acnatsci.org/nawqa/
Composición Cualitativa y Cuantitativa del Fitoplancton en 24 estaciones Establecidas en los Lagos Gatún y Miraflores.	Aguilar C., E. & Pérez, M.	2004	Inventario Biológico de los Lagos Gatún y Miraflores. Universidad de Panamá /Autoridad del Canal de Panamá.
Colecta y Análisis de Muestras Biológicas de los Lagos Gatún y Miraflores	Grimaldo O., M. & Muñoz, E.	2004	Inventario Biológico de los Lagos Gatún y Miraflores. Universidad de Panamá /Autoridad del Canal de Panamá.
Colecta y Análisis de Muestras Biológicas de los Lagos Gatún y Miraflores: Ictiofauna	Averza C., A. Et al	2004	Inventario Biológico de los Lagos Gatún y Miraflores. Universidad de Panamá /Autoridad del Canal de Panamá.
Colecta y Análisis de Muestras Biológicas de los Lagos Gatún y Miraflores: Macroinvertebrados	García, J. Et al	2004	Inventario Biológico de los Lagos Gatún y Miraflores. Universidad de Panamá /Autoridad del Canal de Panamá.
El Inventario Biológico del Canal de Panamá. IV. El Estudio de Aguas Continentales y Entomológico.	Gutiérrez, R. Et al	1994	Scentia (edición especial), Diciembre de 1995.
Methods for Collection and Analysis of Aquatic Biological and Microbiological Samples.	Britton L.J et all	1987	U.S. Geological Services
A Practical Guide to Design and Implementation of Freshwater Quality Studies and Monitoring Programs.	UNEP/WHO	1996	World Health Organization.
El Inventario Biológico del Canal de Panamá. I. El Estudio Marino	D´Croz, L., Martínez V. & Arosemena, G.	1994	Scentia (edición especial), Enero de 1994.

A full list of documents is provided as section 4.0 of this Technical Memorandum.

1.3 STRUCTURE

This Technical Memorandum has been organized in a manner that is consistent with the objectives of the document and that will allow a clear and concise presentation of the program requirements. The structure of the document is briefly discussed in the next paragraphs.

Introduction. This introductory section contains a general description of the work to be carried out by URS as well as the objective, and structure for the Technical Memorandum. In addition, background information that explains the research activities performed during the preparation of the sampling program is also presented.

Flora and Fauna Sampling Program. This section is the primary result of Task 4 of the project and presents the various requirements for the sampling program. The section presents the recommended sites for sampling, as well as the sampling, analysis and reporting requirements for flora and fauna. Sampling schedules are also provided.

Organization / Staffing. This section presents basic requirements for the organization of the program and the human resources needed for implementation of the sampling program.

Bibliography. A list of relevant documents consulted during the preparation of the document is presented in this section.

Attachments. This section presents reference information and supporting documents and figures.

2.0 FLORA AND FAUNA SAMPLING PROGRAM

In order to determine the changes in diversity and abundance, and to detect any seasonal variation of the species, two samplings should be performed at the beginning and at the end of the dry and rainy seasons since prior studies do not show all seasonal conditions and variations present in both lakes. Therefore, the sampling should last at least one or two years, depending on the economic feasibility of the ACP unit responsible for their execution.

Once the baseline is obtained, the species, which may be used as indicative of the conditions of the Gatun and Miraflores Lake, shall be identified. Besides, the information obtained in the baseline will make it possible to determine the monitoring frequency, which shall not be less than two monitoring studies per season.

This section presents the requirements for the implementation of the flora and fauna sampling program. It has been organized into three main components, namely: site selection, sampling programs, and monitoring schedule.

2.1 SELECTION OF SAMPLING SITES

A total of 18 sampling sites have been selected to determine the baseline and to monitor the fluctuations in the structure and abundance of species due to variations in the current water conditions of the Gatun and Miraflores lakes. The UNEP/WHO (1996)[1] recommends that the ecological monitoring sites be the same sites used to monitor the water quality so as to have the maximum possible information available for the interpretation of any ecological effect observed (e.g., increase in salinity and related parameters). That is why the sites recommended in this program correspond to those presented for the water quality-monitoring program.

2.1.1 Gatun Lake

URS proposes 14 sites for the monitoring of the flora and fauna, 5 of these sampling points are in the main tributaries to Lake Gatun, the other 9 sampling points are located in the lake itself. With these sites it is possible get information to build a long-term baseline which would allow the evaluation of possible evaluate the changes in the diversity and structure in the populations of species of flora and fauna in response first to natural seasonal variations and second, in response to fluctuations in the salinity levels in the lake. These sites are presented in the Table 2-2 and Figure 2-1.

2.1.2 Miraflores Lake

Besides the two sites sampled in the Biological Inventory cited before, URS suggests two other places located in two tributaries of Miraflores Lake, which are located in the upper course of each tributary. (See table 2-2 and Figure 2-1)

[1] United Nations Environmental Program/World Health Organization

Table 2-2
Sites Proposed for the Sampling Program of the Flora and Fauna in Lakes Gatun and Miraflores.

Site Name	Coordinates	
Lake Gatun		
LG. 1. Monte Lirio Bay	627528 E	1024617 N
LG. 2. Raíces – Canal Arenosa	613440 E	1005984 N
LG. 3 Peñas Blancas Bay	624293 E	108758 N
LG. 4. Gamboa	643348 E	1007446 N
LG. 5. La Laguna Marsh	628115 E	1000704 N
LG 6. Paraíso-Pedro Miguel	652103 E	997051 N
LG 7 Buoy 11	618089 E	1020640 N
LG 8 Buoy 82	641627 E	1007276 N
LG 9 Buoy 67	633241 E	1006804 N
Lake Gatun Tributaries		
TG-1 Honda Creek	647395 E	1014945 N
TG-2 Agua Salud River	633581 E	1017179 N
TG-3 Trinidad River at the El Chorro Station	613138 E	993931 N
TG-4 Mandinga River	643700 E	1003641 N
TG-5 Ciri River at the Los Cañones Station	603064 E	989270 N
Miraflores Lake		
LM. 23: Miraflores Tripartita	653526 E	996004 N
LM. 24: Cocolì Wetland	654074 E	994585 N
Miraflores Lake Tributaries		
TM-1 Tributary Without Name	652537 E	992770 N
TM-2 Rio Cocoli, Aguas Arriba	652962 E	994323 N

LG: Gatun Lake; LM: Miraflores Lake; TG: Gatun Lake Tributary; TM: Miraflores Lake Tributary.
Source: University of Panama and Panama Canal Authority, 2004. Biological Inventory of Lakes Gatun and Miraflores. Additional sites were selected by URS.

2.2 FLORA SAMPLING PROGRAM

The following section present the relevant components of the proposed flora sampling plan. It has been divided into two main portions, phytoplankton sampling and macrophytes sampling. For each main component the sampling and laboratory procedures, monitoring frequency, data presentation and analysis and reporting requirements are presented.

2.2.1 Phytoplankton

Before beginning the sample collection, relevant information - such as coordinates, climatic conditions, wind direction and flow rate condition are to be gathered if a tributary is to be monitored. Also, the information on the distance between the sampling point and the river mouth shall be recorded. According to some authors, the monitoring must be performed at midday in order to attain optimum transparency. (Findlay, 2001)

The phytoplankton species of continental fresh water bodies, such as lakes and reservoirs, are mostly cosmopolitan, and are mainly constituted by diatoms, dinoflagellates, blue-green algae, and green algae (González de Infante, 1988).

The main objective of the methodology presented below is to determine, through different sampling techniques (both quantitative and qualitative techniques), the relative abundance, composition, and identification of the phytoplankton species in the waters of the Gatun and Miraflores lakes and the tributaries selected for this long-term monitoring program. When monitoring tributaries, the same methodology proposed for the lakes shall be used, and the site conditions, such as distance to the shore, depth, currents, flooding, etc., are to be taken into account.

2.2.1.1 Sampling Procedure

The following section presents the sampling procedures for the use of sampling bottles and phytoplankton nets. The sampling net (qualitative method) will yield presence / absence information and can aid in the identification of rare species, but is not appropriate for accurate counting or biomass estimates. Numerous species or individuals can pass through even small mesh sizes, the net can disrupt colonies, and some fragile species may burst from excessive pressure. However, qualitative samples are excellent for taxonomic surveys because of the large number of specimens collected. For the purposes of this monitoring program, quantitative sampling is recommended as the principal methodology, however qualitative sampling is also presented as an alternate method as well as to obtain taxonomic information for comparison purposes.

2.2.1.1.1 Sampling Bottle (Quantitative)

The first step in sampling for phytoplankton will be the determination of the euphotic zone, defined as the maximum depth at which surface light is attenuated at 0.5%; it has been shown that 0.5% is the minimum light level required for photosynthesis (Findlay, 2001). This may be determined using a secchi disk. Using a sampling bottle (Van Dorn or Niskin type), 500 ml of water shall be collected at the bottom, middle and top of the euphotic zone to create a composite sample of water. Samples shall be taken in triplicate in each sampling station. The sampling bottle shall be shaken so that the sample becomes homogeneous, and then the samples shall be poured into labeled flasks bearing the information corresponding to the collection. Such information shall include the date, station, depth, sample ID, and sampler's name.

In order to preserve the samples, 2 to 3 drops of a Lugol's solution (0.05-1%) shall be added to preserve Crysophyta, then, 2% FAA (formol-acetic acid) shall be added to preserve the color of green algae, cyanophyta and Dinoflagellates if the samples are stored in the darkness (Findlay, 2001).

The labeled containers are to be stored avoiding any contact with direct sunlight. Therefore, they shall be placed in a cooler or any special container for transport to the laboratory, where the microscopic analysis shall be performed.

In order to obtain more information on the collection methods and equipment, see the works by Findlay (2001), Acker (2002) and chapter 7 of Monitoring and Assessing Water Quality (EPA, 2003) provided as attachments.

2.2.1.1.2 Phytoplankton Nets

There are several sizes and types of phytoplankton nets available in the biological instruments catalogs. However, for this work, the use of plankton net, about 1.5 meters long, with a 30-cm diameter mouth and an 80 micron-mesh opening, preferably with a built-in flow meter, is recommended.

In order to collect the samples with this technique, an outboard motor boat is required for horizontal tow in the water column. The boat shall be maintained in a straight line, and at a constant speed (less than 2 knots), for approximately 10 minutes. The tow sampling in each station or sampling area shall be in triplicate.

After the tow, the net will be rinsed to collect all organisms at one end and introduce them into a container. The resulting solution (phytoplankton + rinse water) shall be placed in a labeled 200-ml glass or polyethylene container, which shall be preserved, as previously indicated. Afterwards, the containers with the samples shall be transported to the laboratory for identification and analysis.

2.2.1.2 Laboratory Procedure

The counting method mainly involves taking a sub-sample of a known volume (10 ml) of the homogenized concentrate of the samples collected. This sub-sample shall amount to one milliliter (1ml.), and shall be placed with a dropper or specially graded pipette in a Sedgewick-Rafter counting cell.

In order to count the plankton cells, a mechanical microscope with a 15 x eyepiece shall be used; it should have a built-in micrometer and an objective lens with a magnification of at least 10 x.

After filling the cell with a sub-sample, the latter is placed under the microscope and a field shall be selected at random so as to identify and count the organism which are within the eyepiece grid.

Once this is done, the samples shall be preserved in case a taxonomic check is required or for further studies. For the identification of phytoplankton, the works by Dillard, (1989; 1990; 1993; 2000); Ostenfeld & Nygaard (1925), Prescott (1936;1951;1955; 1973) and Castillo & Robles (1991) are recommended.

After identifying and counting the algae present in the samples, the number of cells per cubic meter shall be calculated and extrapolated to the units sought, whether through the use of the volume of water filtered through the net in cubic meters or through the volume obtained in the collecting bottles. When fragments or broken filaments are found, they should be counted as a unit as long as the cells are complete. To avoid any mistakes in the cell count, the use of a manual counter is recommended.

The averaged data of the count, per technique, shall be kept in a log, and then transferred to electronic data sheets or to a data base which shall include the following records: station, sampling date, date of laboratory analysis, number of cells per m^3 , volume of water filtered through the net or volume taken from the sampling bottle, etc.(See Tables 2-1, 2-2 and 2-3 in the attachments).

2.2.1.3 Sampling Frequency

To determine the baseline, the monitoring must be performed at the beginning and at the end of the dry and rainy seasons during 1 or 2 years; thereafter, the monitoring must be performed twice a year until construction is completed. If there are variations in the populations, the need to increase the sampling frequency should be assessed. During the first year of operation, he sampling frequency will be the same as during the baseline. Monitoring after the first year of operation will be performed twice a year (see tables 2-10 and 2-11).

2.2.1.4 Data Presentation and Analysis

On the basis of the separate sampling data obtained with the sampling bottle and the phytoplankton net, a list of species per station shall be drawn. This list shall include the average phytoplankton density, expressed in number of individuals / ml. The data per group or species shall be presented in the form of tables and graphs for easy handling (Table 2-2 in the attachment). Once all the data is obtained, some indexes shall be calculated which shall then be used for comparisons between stations. To that end, the Shannon & Wiener diversity index (H), the richness species or Simpson index (D) and biological equity, may be used among others (See Table 2-6 in attachments).

2.2.1.5 Report Submittal and Content

The progress reports or reports shall be presented every six months. They shall include: (1) Executive Summary, (2) Introduction or Background Information, (3) Sampling Objectives, (4) Collection Methods, (5) Results Obtained (list of species, tables and comparative graphs), (6) Analysis of the Results, (7) Recommendations, and (8) Bibliography.

2.2.2 Macrophytes

Due to the reproduction capacity, seasonality and species diversity of aquatic macrophytes, they represent one of the most essential aquatic components for maintaining the ecological balance of continental waters, such as lakes and reservoirs.

Many macrophytes species provide shelter and food to fish and invertebrates, which have economic and ecological significance, specially when considering fishing and public health issues.

The objective of the monitoring of aquatic macrophytes is, among others to determine the distribution, abundance and composition of macrophytes (whether emergent, floating or submerged macrophytes) in the lakes.

2.2.2.1 Plot Sampling System

To estimate the distribution and relative abundance of aquatic macrophytes (submerged, floating and marginal macrophytes), there is no defined methodology since many of them do not have a defined pattern, as terrestrial plants, and undergo constant changes due to climatic factors, such as winds and storms.

For these reasons, it will be necessary to select 100 m^2 quadrants (10 m x 10 m each) in the sampling stations. Marking their center coordinates with GPS shall identify these quadrants. These quadrants shall cover the shores and shallow waters.

Once the sites are selected, visual inspections shall be performed in row boats, and several transepts shall be marked within each quadrant. In each transept, all macrophytes (floating, submerged, marginal, etc.) shall be identified, and their relative abundance, species dominance, seasonality, etc. shall be estimated.

All the information shall be recorded in a field log, and then transferred to electronic data sheets or a data base.

In order to identify the species, the publications by D'Arcy, (1987); Tarver (1986); Von Chong, (1986) y Gutiérrez ***et.al*** (1995), Mendoza & González.(1991); Godfrey & Wooten (1979) may be followed.

2.2.2.2 Sampling Frequency

To determine the baseline, the monitoring must be performed at the beginning and at the end of the dry and rainy seasons during 1 or 2 years; thereafter, the monitoring must be performed twice a year until construction is completed. If there are variations in the populations, the need to increase the sampling frequency should be assessed. During the first year of operation, he sampling frequency will be the same as during the baseline. Monitoring after the first year of operation will be performed twice a year (see tables 2-10 and 2-11).

2.2.2.3 Data Presentation and Analysis

Once the data is gathered, a list of species shall be drawn out, and the frequency and relative frequency of the aquatic macrophyte species found in each sampling station shall be included in tables (Table 2-4 in attachments). Once all the data is averaged, some indexes shall be calculated which shall then be used for comparisons between stations. The Shannon & Wiener diversity index (H'), the richness species or Simpson index (D') and biological equity, may be used, among others (See Table 2-6 in attachments).

2.2.2.4 Report Submittal and Content

The progress reports must be submitted every six months. It shall include: (1) Executive Summary, (2) Introduction or Background Information, (3) Sampling Objectives, (4) Collection Methods, (5) Results Obtained (list of species, tables and comparative graphs), (6) Analysis of the Results, (7) Recommendations, and (8) Bibliography.

2.3 FAUNA SAMPLING PROGRAM

The following section presents the relevant components of the proposed fauna-sampling plan. It has been divided into four main portions, zooplankton, benthos, fish and macro invertebrates sampling. For each main component the sampling and laboratory procedures, monitoring frequency, data presentation and analysis and reporting requirements are presented.

2.3.1 Zooplankton

Another fresh water community of great relevance and significance for tropical aquatic ecosystems is the zooplankton (animal plankton) which is made up by several taxonomic groups with well marked morphologies, reproduction strategies and feeding habits, which thus constitute the first trophic level of the marine and fresh water food chain.

The following sections present the proposed methodology to determine their relative abundance as well as the composition of the species present in the fresh water zooplankton of Gatun and Miraflores lakes.

2.3.1.1 Collection and Processing of Zooplankton

Similarly to the phytoplankton, there are several methods to collect zooplankton samples, such as collection in sampling bottles and the use of a suction pumps.

These methods provide, to a greater or lesser degree, the quantitative and qualitative information necessary for numerical comparisons among the populations of this zoological group. The most widely used, and most often referred to method in the literature is the use of plankton net.

However, it is not possible to use the plankton nets in marginal or coastal areas, where the aquatic - submerged and marginal - macrophytes provide shelter and food to a highly significant zooplankton community, which is difficult to reach. That is why; the sampling of the coastal areas should be made with a suction pump.

The following sub-sections explain the two techniques that will be useful for our purpose, namely the plankton net and the suction pump.

2.3.1.2 Field Methods

2.3.1.2.1 Plankton Net

Once the work area is selected, the zooplankton organisms shall be collected with a 120-micron mesh.

This net will be used for surface horizontal tows of the corresponding water column for 10 minutes using an outboard motor boat. Like with phytoplankton, the samples must be obtained in triplicate.

When towing the net, the areas close to the littoral should be avoided; therefore collection should be performed at least 50 m away from the shore to prevent aquatic weeds or submerged logs from obstructing the net.

After the tow, the net will be rinsed to collect all organisms at one end and introduce them into a container. The resulting solution (phytoplankton + rinse water) shall be placed in a labeled 200-ml glass or polyethylene container. These containers shall be adequately labeled with all information related to the stations, such as location, date, time of collection, samplers, etc.

Before preserving the sample obtained, carbonated water is added (some use Club Soda or 1/3 of an antacid tablet) to the sample to assist in the deposition of the organisms and to avoid the deterioration of the calcareous exoskeleton by using a fixation agent, such as formalin.

Sometimes, some plankton organisms, such as cladocera, stay afloat on the water surface film; therefore, it would be convenient to add 2 drops of detergent to help to their settling. Once the samples are obtained, they must be preserved in 75% ethanol or in 2% formaline solution, and they must be taken to the lab for their processing.

2.3.1.2.2 Suction Pump

About 40 liters of water should be suctioned in the littoral area with a mechanical suction pump at different depths - ranging between 0.6, 1.2, and 2 m from the water surface. This water shall go through the 80-micra mesh plankton net to help concentrate the plankton organisms.

After this sieving, the organisms obtained at each depth shall be transferred to a polyethylene bottle or container with screw cap or to a glass bottle with a round glass plug, making sure that all containers have a capacity larger than the collected volume. The water samples must be collected in triplicate in each sampling station.

The containers to be used shall be identified with the information corresponding to the sample collection, including date, station, and depth, to avoid any confusions in the lab.

Before preserving the sample obtained, carbonated water shall be added, as indicated above, and if any organism stays afloat in the water film, some detergent drops shall be added as indicated above.

Once the samples are obtained, they must be preserved in 75% ethanol or 2%-10% formalin solutions, and they must be taken to the lab for processing.

2.3.1.3 Laboratory Procedure

The samples collected must be concentrated to a 10 ml volume to standardize the reference volume during counting. The samples obtained with each method must be processed separately.

Out of this 10 ml of concentrated and homogenized zooplankton, a 1-ml sub-sample shall be taken with a pipette or special dropper. The sub-sample is then placed in a Sedgewick-Rafter counting cell, and covered with a cover slip.

This counting cell shall be placed under the microscope, and the zooplankton components shall be counted and identified with low magnification, sufficient enough to identify the collected specimens. For this counting, the same technique described for phytoplankton shall be used.

All organisms collected must be identified at the highest taxonomic level possible using pictorial and descriptive keys which are present in some publications such as: Ward & Whipple (1966); Edmondson (1959), Needham & Needham (1978) and Pennak (1978), which contain a detail of the main groups of fresh water microscopic invertebrates.

When counting organisms, all immature organism forms of the groups, mainly rotifers, copepods, cladocera, ostracods, shall be taken into account. In order to obtain a statistically valid count, a total of 100 individuals should be quantified in each sub-sample. In order to avoid any mistakes during counting, a manual counter should be used.

When finishing the count, the cell must be emptied, rinsed carefully, and the samples tested should be placed in the original container. Once the lab stage is completed, the samples must be preserved for further analysis in case any scientific authority wants to check the results of these studies.

If the zooplankton sample is to be stored for a long time, some glycerin should be added to the alcohol or formaline solution chosen.

2.3.1.4 Sampling Frequency

To determine the baseline, the monitoring must be performed at the beginning and at the end of the dry and rainy seasons during 1 or 2 years; thereafter, the monitoring must be performed twice a year until construction is completed. If there are variations in the populations, the need to increase the sampling frequency should be assessed. During the first year of operation, the sampling frequency will be the same as during the baseline. Monitoring after the first year of operation will be performed twice a year (see tables 2-10 and 2-11).

2.3.1.5 Data Presentation and Analysis

Once the sampling data is obtained, a list of species per station shall be drawn out, and similarly the zooplankton density shall be presented in tables, which shall express the density in numbers of individuals / L, and they must be averaged according to depth. The data for the groups or species shall be presented in tables and graphs for easy handling (Table 2-3 in attachments). Once all the data is obtained, some indexes shall be calculated which shall then be used for comparisons between stations. To that end, the Shannon & Wiener diversity index (H'), the richness species or Simpson index (D') and biological equity, may be used amongst others (See Table 2-6).

2.3.1.6 Report Submittal and Content

The progress reports must be every six months. It shall include: (1) Executive Summary, (2) Introduction or Background Information, (3) Sampling Objectives, (4) Collection Methods, (5) Results Obtained (list of species, tables and comparative graphs), (6) Analysis of the Results, (7) Recommendations, and (8) Bibliography.

2.3.2 Benthos

The main purpose for monitoring the benthos is to determine the abundance, relative abundance, biomass, as well as the composition of the species present in the benthos or bottom of the Gatun and Miraflores lakes.

In order to sample the benthos or fauna at the bottom of lakes or reservoirs, special equipment, such as dredges are required. They are available in different shapes and sizes, being the Ponar dredge one of the most widely used.

2.3.2.1 Collection and Processing of Benthos

In order to obtain samples of the benthos, a manual 15 x 15 cm Ponar dredge should be used for a 0.02 m^2 coverage area. Due to the capacity of the dredge, it should be thrown five times at each site, and then the four best samples shall be chosen. With this procedure, it will be possible to cover an area of approximately 0.1 m^2. The benthos samples must be taken in each sample station in triplicate.

2.3.2.1.1 Field Methods

Before beginning the sampling, the bottom area should be scanned with a scanner probe, or through snorkeling since the area must be free from submerged logs or rocks, which could hinder the dredging.

Samples must be taken at depths lower than three meters, since previous studies have shown that most of the fauna of the littoral and deep areas are basically the same (Gutiérrez *et. al* 1995); therefore, it is not necessary to devote efforts to the deep areas of the lakes.

Once the topography of the lake bottom is confirmed, the dredge should be thrown, making sure that both grabs are opened, with their corresponding safety screw.

After this routine, it shall be thrown vertically in order to attain a free fall to the bottom. When touching the bottom, it shall be pulled slightly to ensure its closure, and then the equipment must be lifted to the boat deck.

When the dredge is about to reach the water surface, it shall be lifted quickly and the material collected must be poured into a plastic tank or container, big enough to discharge the dredge grabs. Additional information is provided about the different dredge and grabs type and its combinations to use.

To remove unwanted sediments, all collected material shall be diluted with lake water that has been previously filtered, with a 35-micra mesh sieve. The resulting diluted sample will be stirred and filtered with a N°18 sieve (1 mm openings). The material retained in the sieve shall be placed in transparent polyethylene plastic bags.

After finishing this procedure, a label including information on the station and sample ID shall be placed on each one of the plastic bags. These samples shall be preserved in a 5% formaline solution and a 2% Rose Bengal solution is added.

The Rose Bengal solution is a biological stain used to color the tissues of the organisms collected and it facilitates the separation of the sediment grains retained. After this, the samples shall be transported to the lab to continue their processing.

2.3.2.1.2 Laboratory Procedure

All the samples shall be sieved with a metal sieve. Sediment analysis sieves are recommended since they are arranged one over the other, thus facilitating the sieving and cleaning. In this case, the sieves must have a 2 mm and 1 mm mesh opening.

The field sample shall be placed over the 2 mm sieve, which in turn shall be mounted over a 1 mm sieve, and a white enamel tray shall be placed under them to wash them with abundant tap water.

The macrofauna, or the fauna that may be observed at bare sight which is retained in the upper sieve must be collected with pliers while plant residues (leave pieces, wood debris, stones, etc.) is separated from the material retained in the 1 mm sieve. This material is placed on an enamel white tray to continue with the separation of smaller animals.

In order to speed up the recovery of the captured organisms, a solution saturated in kitchen salt may be used since it makes them float. To ensure the collection of all animal material, the samples should be rinsed several times to make sure that there are no organisms left for extraction, then the litter shall de discarded. The period for sample testing should range between 20 and 25 minutes.

The benthic material of each sample must be identified at the highest taxonomic level possible, and shall be counted with the aid of a stereomicroscope; however, some groups of invertebrates, such annelids, nematode, etc., shall be identified at the level of Phyllum or class. The data obtained must be recorded in a field log, and then transferred to electronic data sheets or a database.

The benthic organisms may be recognized with the aid of some keys available in the publications by Edmondson (1959); Usinger (1956); Merrit &Cummins (1996); Pennak (1978).

After counting the samples, they must be stored in 75% ethanol in glass flasks or vials, duly equipped for further study or to check the species that may present problems in their taxonomy.

2.3.2.2 Sampling Frequency

To determine the baseline, the monitoring must be performed at the beginning and at the end of the dry and rainy seasons during 1 or 2 years; thereafter, the monitoring must be performed twice a year until construction is completed. If there are variations in the populations, the need to increase the sampling frequency should be assessed. During the first year of operation, the sampling frequency will be the same as during the baseline. Monitoring after the first year of operation will be performed twice a year (see tables 2-10 and 2-11).

2.3.2.3 Data Presentation and Analysis

Once the sampling data is obtained, a list of species per station shall be drawn out, and similarly the density shall be presented in tables, which shall express the density in numbers of individuals / m^2, biomass per group, and they must be averaged per station. The data for the groups or species shall be presented in tables and graphs for easy handling. Once all the data is obtained, some indexes shall be calculated which shall then be used for comparisons between stations. To that end, the Shannon & Wiener diversity index (H'), the richness species or Simpson index (D') and biological equity, may be used among others (See Table 2-6 and 2-7 in attachments).

2.3.2.4 Report Submittal and Content

The progress reports must be submitted every six months. It shall include: (1) Executive Summary, (2) Introduction or Background Information, (3) Sampling Objectives, (4) Collection Methods, (5) Results Obtained (list of species, tables and comparative graphs), (6) Analysis of the Results, (7) Recommendations, and (8) Bibliography.

2.3.3 Fish

The main purpose when monitoring fish is the qualitative and quantitative sampling of the composition, abundance, and species diversity of marine and fresh water fish inhabiting the Gatun and Miraflores lakes.

2.3.3.1 Fish Collection and Processing

In each station selected, the specimens shall be captured through a series of methods, among them, experimental gill nets (quantitative method), trawl nets, cast nets, and hand nets (qualitative method).

2.3.3.1.1 Experimental Gill Nets

For quantitative capture of fish, experimental gill nets shall be used. These nets shall be 100-m long and with a height from the buoy line to the plumb line of approximately 2 m.

These experimental nets shall have cloths, approximately 12.5-m long, with different mesh sizes (3, 4, 5, 6, 7, 8, 10 y 15 cm), so as to capture a larger variety of fish sizes.

In each sampling station, the gill nets shall be cast, placing the smaller mesh towards the shores and trying to cover several habitats of the sampling area. When placing the nets, a minimum distance of 100 meters shall be maintained between each mesh set. Additional information is presented in attachment from the U.S. Geological Services.

The nets shall remain in the water for a minimum of 12 hours and a maximum of 24 hours, preferably during night hours, and after this period, the fish caught per station shall be picked and packed in ice for transport to the laboratory. Samples must be collected in triplicate.

2.3.3.1.2 Collection Methods with Trawl Nets and Cast Nets

A shore or beach shall be located in the sampling station for sampling (three casts or trawls) with a 30-m long, 2-m high and 1.5 mesh trawl net. Similarly, in shallow areas, free from logs and waterweeds, the 2-m diameter, 2.5-cm mesh cast net will be cast three times.

The qualitative data obtained with these methods will be used to obtain complementary information on the population of young fish, those in reproduction, or of some macroinvertebrates in the area. The catch with both methods shall be stored in ice, in their corresponding plastic bags for laboratory processing.

The samples must be identified at the species level, using the keys from publications by Allen & Robertson (1998); Bussing (1998), Breder Jr., C.M. 1944., Fischer (1978); Fisher et. al (1995 a,b); Meek & Hildebrand (1916); Meek & Hildebrand (1923, 1925, 1928).

2.3.3.2 Sampling Frequency

To determine the baseline, the monitoring must be performed at the beginning and at the end of the dry and rainy seasons during 1 or 2 years; thereafter, the monitoring must be performed twice a year until construction is completed. If there are variations in the populations, the need to increase the sampling frequency should be assessed. During the first year of operation, the sampling frequency will be the same as during the baseline. Monitoring after the first year of operation will be performed twice a year (see tables 2-10 and 2-11).

2.3.3.3 Laboratory Procedure

All fish caught with both methods shall be identified at the level of the species, measuring their total and standard length (in mm), with the aid of a fishmeter, and weighed (in grams) with digital or spring scales.

Some of the field samples shall be kept for reference, therefore, those selected shall be labeled and stored in transparent plastic bags containing 10% formaline, and after 15 days, they shall be washed and transferred to 70% ethanol for final preservation.

The quantitative and qualitative information obtained must be recorded in field notebooks or logs, and then transferred to electronic data sheets or databases.

2.3.3.4 Data Presentation and Analysis

Once the averaged sampling data is obtained, a list of species per station shall be drawn out, and similarly the relative abundance per species, biomass, and frequency of appearance of species in the stations shall be presented in tables.

The density shall be expressed in numbers of individuals / m^2, or individuals caught per night, or individuals per cast, and they must be averaged per station. The data for the groups or species shall be presented in tables and graphs for easy handling. Once all the data is obtained, some indexes shall be calculated which shall then be used for comparisons between stations. The Shannon & Wiener diversity index (H'), the richness species or Simpson index (D') and biological equity, may be used among others (See Table 2-6 and 2-8 in attachments).

2.3.3.5 Report Submittal and Content

The progress reports must be every six months. It shall include: (1) Executive Summary, (2) Introduction or Background Information, (3) Sampling Objectives, (4) Collection Methods, (5) Results Obtained (list of species, tables and comparative graphs), (6) Analysis of the Results, (7) Recommendations, and (8) Bibliography.

2.3.4 Macroinvertebrates (Crustacean and Mollusks)

The purpose of macroinvertebrate sampling is to determine the relative abundance and composition of the populations of decapods crustacean and some mollusks (snails) in lakes and reservoirs that will lead to a better knowledge and understanding of this aquatic fauna.

2.3.4.1 Collection and Processing of Macroinvertebrate (Crustacean and Mollusks)

Depending on the characteristics of the area, such as depth, floating or submerged water weeds, shores, rocks, etc, different fishing tackle shall be used for the collection of the main benthic macroinvertebrate (crustacean and mollusks), such as hand nets (qualitative) and passive sampling quantitative techniques, such as traps, better known as minnow traps.

2.3.4.1.1 Collection Methods with Traps

In order to capture the macroinvertebrate, handcrafted traps or metal traps should be used, such as the well-known minnow traps or hoop nets, which come in different sizes.

Bait shall be placed in these traps, preferably, meat, animal gut or plants in decomposition, and the traps shall then be thrown in different zones of the sampling areas.

They shall remain at least one night in the water, and after this time, they shall be checked and the animals caught will be collected and preserved in transparent plastic bags, containing 5% formalin solution for their analysis at the lab.

On the other hand, a sampling shall be performed with fine mesh hand nets among the weeds in the littoral area. The mollusks may also be manually collected.

All the macroinvertebrate obtained with the traps and other fishing tackle must be identified, counted and weighed (g) using a digital scale.

In order to identify the main types of macroinvertebrate in the samples, the works by Méndez (1981), Abele and Kim (1989), FAO Guidelines (1995); Olsson Rosewater, J. 1975[a] ; Holthius (1952); Méndez (1981), and FAO Guidelines (1995) may be used .

2.3.4.2 Sampling Frequency

To determine the baseline, the monitoring must be performed at the beginning and at the end of the dry and rainy seasons during 1 or 2 years; thereafter, the monitoring must be performed twice a year until construction is completed. If there are variations in the populations, the need to increase the sampling frequency should be assessed. During the first year of operation, the sampling frequency will be the same as during the baseline. Monitoring after the first year of operation will be performed twice a year (see tables 2-10 and 2-11).

2.3.4.3 Data Presentation and Analysis

Once the data is obtained, tables indicating abundance, relative species abundance, and biomass of the main macroinvertebrate species collected per station shall be drawn out. The data shall be expressed per catch per night with traps, or individuals per trap - hours. Once all the data is averaged, some indexes shall be calculated which shall then be used for comparisons between stations. To that end, the Shannon & Wiener diversity index (H'), the richness species or Simpson index (D') and biological equity, may be used among others (See Table 2-6 in attachments).

2.3.4.4 Report Submittal and Contents

The progress reports must be submitted every six months. It shall include: (1) Executive Summary, (2) Introduction or Background Information, (3) Sampling Objectives, (4) Collection Methods, (5) Results Obtained (list of species, tables and comparative graphs), (6) Analysis of the Results, (7) Recommendations, and (8) Bibliography.

2.4 MONITORING SCHEDULE

To understand the monitoring/frequency proposed it is necessary to visualize the various stages or phases associated to the potential Panama Canal Expansion. For the purposes of this document, the following phases have been identified:

- **Baseline**. This corresponds to the start of the monitoring plan for a period of up to 2 years.
- **Pre-Construction**. This corresponds to the period after the baseline and before the start of construction activities.
- **Construction** This corresponds to the period when construction activities would take place.
- **Operation**. This corresponds to the period following construction, when the lakes system could be influenced by an influx of saltwater.

Given that each phase of the project is unique, the required monitoring frequency may be different as the project move forward. Tables 2-10 and 2-11 provide the monitoring schedule/frequencies for the phases/stages identified above.

Table 2-10
Bimonthly Schedule for Monitoring the Flora and Fauna of Lakes Gatún, and Miraflores and Tributaries. (Baseline and First Year of Operation)

Gatún and Miraflores Lakes	JAN	FEB	MAR	APR	MAY	JUN	JUL	AUG	SEP	OCT	NOV	DEC
Phytoplankton	x		x					x		x		
Phytobenthos	x		x					x		x		
Zooplankton	x		x					x		x		
Benthos	x		x					x		x		
Fish	x		x					x		x		
Macroinvertebrate	x		x					x		x		
Aquatic macrophytes	x		x					x		x		
MAIN TRIBUTARIES												
Benthos		x		x					x		x	
Fish		x		x					x		x	
Macroinvertebrate		x		x					x		x	
Aquatic insects		x		x					x		x	
Aquatic macrophytes		x		x					x		x	

Table 2-11
Schedule for the Monitoring of the Flora and Fauna During the Dry and Rainy Season in Lakes Gatún, and Miraflores, and Tributaries. (Pre-Construction, Construction and after First Year of Operation)

Lakes Gatún and Miraflores	JAN	FEB	MAR	APR	MAY	JUN	JUL	AUG	SEP	OCT	NOV	DEC
Phytoplankton	x								x			
Phytobenthos	x								x			
Zooplankton	x								x			
Benthos		x								x		
Fish		x								x		
Macroinvertebrate		x								x		
Aquatic macrophytes	x								x			
MAIN TRIBUTARIES												
Benthos	x								x			
Fish		x								x		
Macroinvertebrate		x								x		
Aquatic insects	x								x			
Aquatic macrophytes	x								x			

2.5 COST

The biennial cost for the determination of the baseline is estimated to be in the range of $ 180,000; if it were performed in one year, the cost will be of around $ 90,000. On the other hand, if an annual monitoring program with two monitoring campaigns per year were established, the cost would be of about $ 45,000. (Column 4, Table 2-1)

It should be pointed out that these costs must be reviewed in the future since they correspond to those submitted by the University of Panama for the execution of the Biological Inventory in 2004. Besides, these prices do not include the logistics costs paid by the ACP for said inventory.

It is advisable for the personnel of the Water Quality Unit to be incorporated to the baseline survey so that they are trained in the collection methods and laboratory procedures. This will make it possible to resume the monitoring of the indicative species and shall translate into a cost reduction.

Table 2-1
Estimated Costs for the Monitoring of the Flora and Fauna within a One Year Period.

Description	1 Cost per Sampling Site	2 No. of Sampling Points	3 Cost per Sampling Campaign[2]	4 Cost per Season[1]	5 Annual Cost
Phytoplankton	250[3]	18	4,500	9,000	18,000
Zooplankton	250[3]	18	4,500	9,000	18,000
Benthos	250[3]	18	4,500	9,000	18,000
Macroinvertebrates	250[3]	18	4,500	9,000	18,000
Fish	250[3]	18	4,500	9,000	18,000
Total	**1,250.00**	**18**	**22,500.00**	**45,000.00**	**90,000**

[1]: It refers to the cost per dry and rainy season. [2]: Two sampling campaigns per climatic season have been proposed.

[3]: Costs submitted by the University of Panama to ACP.

3.0 ORGANIZATION / STAFFING

Due to the large number of stations and size of the work to be performed, in order to attain the objectives sought, URS considers necessary to establish a strategy or guidelines. Most of the recommendations deal primarily with the organizational aspects of the program, and are summarized below:

- This project must have an office or a building where the specialized personnel, laboratories and the working team are to be gathered. It must also have a secretary and furniture, such as computers, printers, etc. to ensure the efficiency and speed of the tasks to be carried out under the monitoring program. A suggested organization scheme, taking into account the existing organizational structure of ACP is presented as an Attachment.

- Highly specialized human resources, dedicated to the program on a full-time basis, will be required for the successful implementation of the program. This includes a coordinator, as well as field technicians and office staff (see organizational chart provided as an attachment). In addition, the internal coordination with other units that may provide services to the program must be procured efficiently and planned for ahead of time.

- As mentioned above, the project must have a general coordinator (water biologist, with experience related to the flora and fauna of continental waters and reservoirs) who shall be in charge of the project and the one directly responsible for the program. This person must have the ability to report and present data efficiently and clearly as well as to coordinate with other departments and personnel to be able to execute the field, laboratory and office work.

- The general coordinator shall be in charge, among other tasks, of coordinating the monitoring, follow up and maintenance of the necessary equipment before and after the sampling, and of supervising the scientific and technical personnel of the project. Similarly, he/she shall be responsible for the correct and timely analysis and report of the results obtained, and may timely recommend amendments to the designs and methods used in the execution of the project and should be ready to report and aid in the correction of the limitations, which may eventually arise in this process.

- For the execution of the field tasks (collection and preservation), as well as the identification, separation, counting and analysis of the samples, in the lab, it will be necessary to have a work team made up of biologists and lab technicians qualified or with proven experience in the areas of limnology, aquatic botany, hydrobiology or aquatic sciences, and who should have preferably worked in monitoring projects or similar scientific studies, in any of the above-mentioned fields.

- In regards to fauna, the work team shall be made up of a zoologist and two assistants, who will be in charge of all issues related to the fauna (zooplankton, fish, benthos, macroinvertebrate, and aquatic insects). All members of this team shall have experience or should have worked in some of these research fields.

- In regards to botany, the team shall also be made up of a botanist (preferably with experience in aquatic macrophytes or phytoplankton) and two field and lab assistants

who shall be in charge of issues related to the flora (phytoplankton, phytobenthos, and aquatic macrophytes) related to the sampling.

- The mission of both groups shall be to ensure the collection and processing of the samples, sample logistics, and the systematic and timely execution of the sampling and monitoring tasks.

- Also, the primary mission of the zoologist and of the botanist shall be to keep an updated data base, present partial timely reports of their topics, and establish permanent communications with the national research organizations, such as the University of Panama, the Technological University and the Smithsonian Institute, or any other foreign institute interested in these issues.

- It is necessary to point out that the samples taken during the execution of the project must be preserved either in reference collections or in special deposits, so that they may be used in the future. Also, some of them should be given as a donation to the reference collections of institutions such as the University of Panama and the Smithsonian Institute.

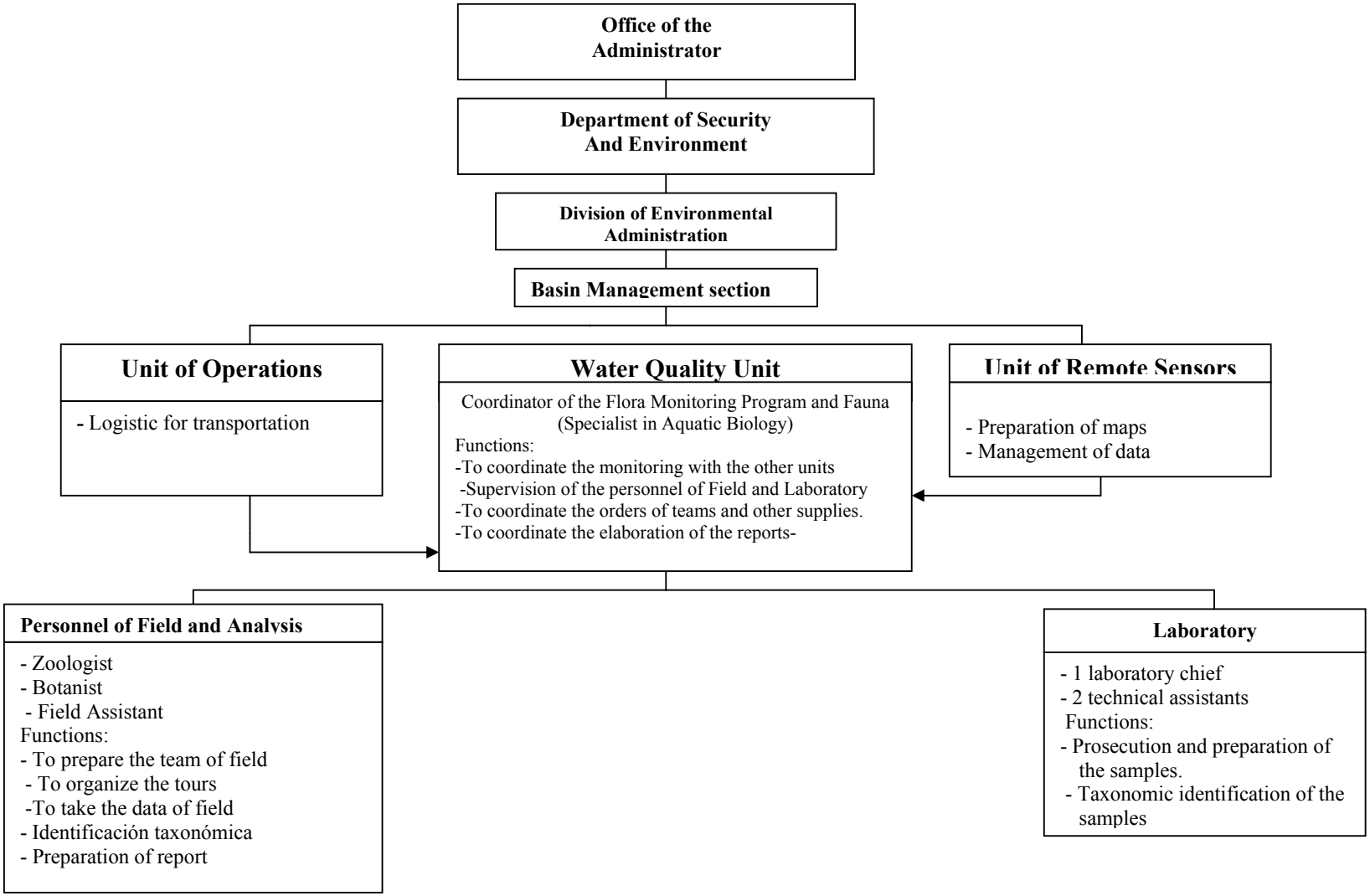
Office of the Administrator
Department of Security And Environment
Division of Environmental Administration
Basin Management section
Unit of Operations
- Logistic for transportation
Water Quality Unit
Coordinator of the Flora Monitoring Program and Fauna (Specialist in Aquatic Biology)
Functions:
-To coordinate the monitoring with the other units
-Supervision of the personnel of Field and Laboratory
-To coordinate the orders of teams and other supplies.
-To coordinate the elaboration of the reports-
Unit of Remote Sensors
- Preparation of maps
- Management of data
Personnel of Field and Analysis
- Zoologist
- Botanist
- Field Assistant
Functions:
- To prepare the team of field
- To organize the tours
-To take the data of field
- Identificación taxonómica
- Preparation of report
Laboratory
- 1 laboratory chief
- 2 technical assistants
Functions:
- Prosecution and preparation of the samples.
- Taxonomic identification of the samples

4.0 BIBLIOGRAPHY

4.1 PHYTOPLANKTON AND PHYTOBENTHOS

American Public Health Association , American Water works Association, and Water pollution control. 1975. Standard methods for the examination of water and wastewater. 14 th edition. APHA. Washington DC 1193 pp.

Casal, F. A. 1994. Descripción numérica y contribución al conocimiento del epifitismo diatomológico en Hydrilla verticillata. L. Royle, (Hydrochariticidae). Thesis, Universidad de Panamá. 182 pp.

Castillo G. & Robles, E. 1991. Contribución al conocimiento del microplancton limnético en el Lago Gatún, Panamá. Thesis, Universidad de Panamá. 159 pp.

Dillard, G. E. 1989. Freshwater algae of the southeastern United States. Part 1. Chlorophyceae: Volvocales, Tetrasporales and Chlorococcales. Bibliotheca Phycologica, 81, 202 pp. + 37 sheets.

Dillard, G. E. 1989. Freshwater algae of the southeastern United States. Part 2. Chlorophyceae: Ulotrichales, Microsporales, Cylindrocapsales, Sphaeropleales, Chaetophorales, Cladophorales, Schizogoniales, Siphonales y Oedogoniales. Bibliotheca Phycologica, 83, 161 pp. + 14 sheets.

Dillard, G. E. 1990. Freshwater algae of the southeastern United States. Part 3. Chlorophyceae: Zygnematales : Zygnemataceae, Mesotaeniaceae y Desmidiaceae (Section 1). Bibliotheca Phycologica, 85, 172 pp. + 51 sheets.

Dillard, G. E.. 1991. Freshwater algae of the southeastern United States. Part 4: Chlorophyceae: Zygnematales: Desmidiaceae (Section 2). Bibliotheca Phycologica, 89, 205 pp. + 52 sheets.

Dillard, G. E. 1991. Freshwater algae of the southeastern United States. Part 5: Chlorophyceae: Zygnematales: Desmidiaceae (Section 3). Bibliotheca Phycologica, 90, 155 pp. + 37 sheets.

Dillard, G. E. 1993. Freshwater algae of the southeastern United States. Part 6: Chlorophyceae: Zygnematales: Desmidiaceae (Section 4). Bibliotheca Phycologica, 93, 166 pp. + 45 sheets.

Dillard, G. E.2000. Freshwater algae of the southeastern United States. Part 7: Pigmented Euglenophyceae. Bibliotheca Phycologica, 106, 134 pp. + 20 sheets.

Gonzalez De Infante, A. 1988. El plancton de las aguas continentales. General Secretariat of the Organization of American States. Regional Programa for Scientific and Technological Development. Washington, D. C. 126 pages.

Kramer, K. & Lange – Bertalot, H. 1991. Bacillariophyceae, 3 Teil: Centrales, Fragilariaceae, Eunotiaceae, Stuttgart: Gustav Fischer Verlag, 576 pp. + 166 sheets and 2180 figures.

Kramer, K. & Lange – Bertalot, H.. 1998. Bacillariophyceae. 2 Teil: Bacillariaceae, Epithemiaceae, Surirellaceae. Stuttgart: Gustav Fischer Verlag, 596 pp. + 184 sheets and 1914 figures.

Muller-Melchers, F.C. 1956. Técnica para el estudio de las diatómeas. Boletín do Instituto Oceanográfico Sao Paulo, 7(1-2), 151 –160-

Ostenfeld, C. H. y Nygaard, G. 1925. On the Phytoplankton of the Gatun Lake, Panama Canal. (Botanical results of the Dana Expedition 1921-1922, N° 2). Dansk Botanisk Arkiv, 4 (10), 1-16.

Parra, O. O., González, M., DellaRossa, V., Rivera, P & Orellana, , M. 1982. Manual taxonómico del fitoplancton de aguas continentales. Con especial referencia al fitoplancton de Chile. I. Cyanophyceae. Universidad de Concepción. 70 pp. + 18 sheets.

Parra, O. O., González, M., DellaRossa, V., Rivera, P & Orellana, , M. 1983. Manual taxonómico del fitoplancton de aguas continentales. Con especial referencia al fitoplancton de Chile. V. Chlorophyceae. Parte II: Zygnematales. Universidad de Concepción. 353 PP. + 119 sheets.

Prescott, G. W. 1936. Notes on the algae of Gatun Lake, Panama Canal. Transactions of the American Microscopical Society, 55(4), 501-509.

Prescott, G. W. 1951. Ecology of Panama Canal Algae. Transactions of the American Microscopical Society, 70(1),1- 24.

Prescott, G. W. . 1955. Algae of the Panama Canal and its tributaries. I. Flagellated organisms. The Ohio Journal of Science, 55(2), 99-121 + 7 sheets.

Prescott, G. W. . 1973. Algae of the Western Great Lakes Area. Wm, C, Brown Company publishers, 977 pp, With an illustrated Key to the genera of Desmids and Freshwater Diatoms.

Prescott, G. W. 1978. How to know the freshwater algae. Wm, C, Brown Company Publishers, 293 pp.

Ramirez, J. J. 1982. El Fitoplancton: métodos de muestreo, concentración, recuento y conservación. Actualidades Biológicas, 2(39), 30-36.

Round, F. E., Crawford, R.M. Y Mann, D.G. 1990. The Diatoms. biology & morphology of the genera. Cambridge: Cambridge University Press, 747 pp.

Van Den Hoek, C., D.G. Mann & H.M. Jahns. 1995. Algae. An introduction to phycology. Cambridge University Press, 627 pp.

Venrick, E. L. 1995. Muestreo y submuestreo del fitoplancton marino y dulceacuícolas. *En*: Alveal, K., Ferrario, M.E., Oliveira, E.C. y Sar, E. (Eds.) Manual de Métodos Ficológicos. Universidad de Concepción, Chile. Pages 199-217.

Villafañe, V. E.& Reid, F. M. H. 1995. Métodos de microscopía para la cuantificación del fitoplancton. *En*: Alveal, K., Ferrario, M.E., Oliveira, E.C. y Sar, E. (Eds.) Manual de Métodos Ficológicos. Universidad de Concepción, Chile. Pages 169-185.

4.2 ZOOPLANKTON

American Public Health Association , American Water works Association, and Water pollution control. 1975. Standard methods for the examination of water and wastewater. 14 th edition. APHA. Washington DC 1193 pp.

Edmonson, W.T.et al.1959.Fresh water biology. John Wiley and sons Inc.New York.1248 pp.

Pennak, R.W. 1953. Freshwater invertebrates of the United States Roanal Press New York.803 pp.

Ward H.B.& G.C.Whipple. 1966. Freshwater biology. Edited by W.T. Edmondson. John Wiley & sons, New York. 1248 pp.

Zaret, T. M. 1984. Central American Limnology and Gatun Lake Panama. *En*: F. B. Taub (Ed.) Ecosystems of the World, 23: Lakes and Reservoirs. Elsevier, Amsterdam. pages 447-465.

4.3 BENTHOS

Barnes, R.D. 1991. Zoología de los invertebrados. 5a ed. Nueva Editorial Interamericana, S.A. de C.V., México, D.F., 957 p.

Edmonson, W.T.et al.1959.Fresh water biology. John Wiley and sons Inc.New York.1248 pp.

Gutiérrez, R. Amores, R. González, R. Navas, D. Korytkowski, CH. y Barrios, H. (edit.). 1995. El inventario biológico del Canal de panamá IV: El estudio de aguas continentales y entomológico, SCIENTIA (Panamá), Número Especial 4: 1-297

Pennak, R.W. 1953 Freshwater invertebrates of the United States. Ronald Press N.Y.796 pp.

Merrit, R.W. & Cummins, K.W. 1996.An introduction to the aquatic insects of North America. 3a ed. Kendall/Hunt Publishing Company, 860 p.

Needham J.G. & Needham, P.R. 1978. Guía para el estudio de los seres vivos de las aguas dulces. Editorial Reverté, S.A., Barcelona, 131 p.

4.4 MACROINVERTEBRATE (CRUSTACEAN AND MOLLUSKS)

Abele, L.G. 1975. The decapod crustacean fauna on the Panama Canal and adjacent waters, Special Reports to the Panama Canal Company, 21 p.

Abele, L.G. & Kim, W. 1989. The decapod crustaceans of the Panama Canal. Smithsonian Contributions to Zoology, No. 482: 1-50.

Fisher, W., Krupp F. Schneider, W. Sommer, C. Carpenter, K.E. y Niem, V.H.. 1995. Guía FAO para la identificación de especies para los fines de la pesca, Pacífico Centro-Oriental. Vol. I (Plantas e Invertebrados): 1-646 p.

Holthius, L. 1952. The subfamily palaemonidae. A general revision of the palaemonidae (crustacea: decapoda:natantia) of the Americas. Allan Hancock Found. Occ. Pap. N° 12.

Méndez, M. 1981. Clave de identificación y distribución de los langostinos y camarones (crustacea:decapoda) del mar y ríos de la costa del Perú. Bol. Instituto del Mar del Perú. Vol 5: 170 p.

Rosewater, J. 1975b. Some results of the national museum of natural history Smithsonian tropical research institute survey of Panama 1971-1075. Bull. Am. Malacol. 1975: 48-50.

Rosewater, J. 1975a. Mollusk of Gatun Locks, Panama Canal. Bull. Amer. Malac. Union. Inc., 1974: 42-43

4.5 FISH

Allen, G.R.& Robertson, D.R.. 1998. Peces del Pacífico Oriental Tropical. Crawford House Press Pty Ltd., Bathurst, Australia, 327 p.

Breder, C.M. 1944. A revised list of the fishes of Barro Colorado, Gatún Lake, Panama. Copeia 1944(2): 86-89.

Bussing, W. A. 1998. Peces de las aguas continentales de Costa Rica. Rev. Biol. Trop. 46 (supl.2): 1-468.

Fischer, W. (ed.). 1978. FAO Species Identification Sheets for Fishery Purposes, Western Central Atlantic (fishing area 31), vol. II - VI. Rome, Italy, var. page

Fisher, W., Krupp, F. Schneider, W. Sommer, C. Carpenter K.E. y Niem, V.H.. 1995a. Guía FAO para la identificación de especies para los fines de la pesca, Pacífico Centro-Oriental. Vol. II (Vertebrados parte 1): 647-1200 p.

Fisher, W., Krupp, F. Schneider, W. Sommer, C. Carpenter K.E. y Niem, V.H.1995b. Guía FAO para la identificación de especies para los fines de la pesca, Pacífico Centro-OrientalVol. III (Vertebrados parte 2): 1201-1813 p.

Gutiérrez, R. Amores, R. González, R. Navas, D. Korytkowski, CH. y Barrios, H. (edit.). 1995. El inventario biológico del Canal de panamá IV: El estudio de aguas continentales y entomológico, SCIENTIA (Panamá), Número Especial 4: 1-297.

Johnson, D. & L.A. Nielsen. 1983. Sampling considerations. Pp. 1 – 21 in Johnson & Nielsen (edits) Fisheries techniques. American Fisheries Society, Bethesda, Maryland, 468 pp.

Meek, S.E. & Hildebrand, S.F. 1916. The fishes of the freshwaters of Panama. Field. Mus. Nat. Hist., Zool. Ser., 10(15): 217-374.

Meek, S.E. & Hildebrand, S.F. 1923, 1925, 1928. The marine fishes of Panama. Field. Mus. Nat. Hist. Zool. Ser. Vol XV (215, 226, 249): 1-1945.

4.6 AQUATIC MACROPHYTES

D'Arcy, W. 1987. Flora of Panamá: check list and index. Monographs in systematic botany. Vol 17, Missouri Botanical Gardens, Missouri.

Godfrey, R.K & J.W. Wooten. 1979. Aquatic and wetland plants of Southeastern United States. Univ. of Georgia press. 458 pp.

Gutiérrez, R. Amores, R. González, R. Navas, D. Korytkowski, CH. y Barrios, H. (edit.). 1995. El inventario biológico del Canal de panamá IV: El estudio de aguas continentales y entomológico, SCIENTIA (Panamá), Número Especial 4: 1-297

Mendoza, R. & J.E. González. 1991. Plantas acuáticas de Panamá. Editorial Universidad de Panamá. Panamá. 224 p.

Tarver, D.P. 1986. Aquatic and wetland plants of Florida. Third edition. Bureau of aquatic plant research and control. Fla dept. of Natural resources, Tallahassee Florida.

Von Chong, C. 1986. Manejo de la vegetación acuática en el canal de Panamá. Revista Lotería, n° 372, sept-oct, p. 108 – 121.

4.7 AQUATIC INSECTS

Edmonson, W.T. 1959. Freshwater biology. John Wiley and sons Inc. New York.1248 pp.

Hynes, H.B.N. 1970. The ecology of running waters. Liverpool Univ. Press. 555 pp.

Macan,T.T. 1958. Methods of sampling the bottom fauna in stony streams. Mitt. Int. Ver. Limnol. 8:1 – 21.

Needham J.G. & Needham, P.R. 1978. Guía para el estudio de los seres vivos de las aguas dulces. Editorial Reverté, S.A., Barcelona, 131 pp.

Schwoerbel, J. 1975. Métodos de hidrobiología. Primera edición española, Ediciones H. Blume. Madrid, Spain. 262 pp.

ATTACHMENT 1

Tabla 2-1 Field Data by Station Monitoried

Lake:______________________ Tributary:______________________ Organism Sampled:______________________

Station	Coordenates UTM		Date	Time	Depth	Samples	Velocity	flowmeter Lecture		Difference
	X	Y			(Meter)		(knots)	Initial	Final	Final-Initial

Table 2-3 Volume of filtered Water and number of Phytoplankton Cells by Cubic Meter

Lake__________________ Tributary river:____________________

Station	Date	Samples	No. of Cells /m^3	Volume of Water		No. of Cell in Volume	
			Laboratory Count	Filtered by net	Bottle Sampler	Filtered by net	Bottle Sampler

Table 2-4 Fitoplankton Species Identificated by Sampling Points.

Lake:_____ Tributary river:_____ Method of Sampling:_____

Family	Specie	Station						Average	Station						Average
		Samp.1		Samp.2		Samp.3			Samp.1		Samp.2		Samp.3		
		fa	%	fa	%	fa	%		fa	%	fa	%	fa	%	

fa: Frequency absolute; Samp.: Sample

Table 2-5 Macrophytes Recorded in the Monitoring Stations in Lakes Gatun, Miraflores and Tributaries

Sampling Period :								General	
Date of Observation Lake level								Average	
Family	Specie	F	FR (%)	F	FR (%)	F	FR (%)	F	FR (%)
Emergents									
Floatings									
Marginal									
Submerged									
Totals									

F: Frequency of the specie; F.R: Relative Frequency.
Source: Gutierrez et al (1994), modified by URS, 2004

Table 2-6 Number of Zooplanktonic Individuals by Main Groups, Recorded by Station Sampled.

No. Station	Cladocera	Copepods		Rotifers	Other Groups
		Calanoids	Cyclopoids		

Table 2-7 Biodiversity Index by Station Sampled.

Station	Shannon Wiener Index	Simpson Index	Equity	Average of Individuals	Number of Groups

Table 2-8 Species of the Benthos Identificated by Sampling Sites.

Lake:_____ Tributary river:_____ Method of Sampling:_____

Family	Specie	Station						Averagae	Station						Averagae
		Samp.1		Samp.2		Samp.3			Samp.1		Samp.2		Samp.3		
		fa	%	fa	%	fa	%		fa	%	fa	%	fa	%	

Samp: Sample; fa: Frequency absolute

Table 2-9 Numbers of Individual, Biomass and Abundance Relative of Fishes Reported by Sampled Sites.

Lake:__________________ Tributary river_______________ Period of Monitoring:_______________

Family	Specie	No.	A	B	No.	A	B	No.	A	B	No.	A	B

No. Numbers of individuals; A: Abundance relative; B: Biomass

ATTACHMENT 2

Environment Canada Environnement Canada

Canada

Ecological Monitoring and Assessment Network

ROTOCOLS FOR MEASURING BIODIVERSITY:

Phytoplankton in Freshwater

D.L. Findlay and H.J. Kling

Sampling Procedures

Sampling sites and frequency

Sampling sites for phytoplankton should be located a reasonable distance away from shore to eliminate contamination by periphytic (attached) species of algae. The depth of the euphotic zone can also be used in defining sampling location. The euphotic zone is defined by the maximum depth at which surface light is attenuated to 0.5%. It has been demonstrated that 0.5% is the minimum light level required for photosynthesis (Fee 1978). Generally, twice the Secchi disc reading will be a reasonable estimate of the maximum depth of the euphotic zone. If the lake is thermally stratified, it is best to sample over the deepest location of the euphotic zone, which will reduce the probability of contacting the lake sediments and will also allow sampling of the different thermal strata (epilimnion, metalimnion, and hypolimnion). Bi-weekly to monthly sampling is necessary to capture the seasonal dynamics of phytoplankton, and to quantify their abundance and biomass. It may be necessary to increase sampling frequency during periods of blooms. Lakes should be sampled during mid-day to optimize light transparency. Although phytoplankton are relatively homogeneously mixed, uneven horizontal distribution (patchiness) can be a source of sampling error. Taking multiple samples from different stations and combining them to produce a composite sample can reduce this error.

Many types of field gear can be used to collect phytoplankton from freshwater lakes, reservoirs, and ponds. The type of gear selected depends on the information required to address the question being asked.

Qualitative sampling

For qualitative sampling of phytoplankton, a 10-µm Nitex® mesh phytoplankton net is recommended (Fig. 1). The net is 20 cm in diameter, 35 cm in length, and is fitted with a stopcock at the lower end to allow opening and closing. The mouth of the net has a 5-cm canvas collar fitted with a metal bridle that attaches to the sampling line. This type of net is commercially available from Geneq Inc. (Appendix 1). The net is lowered to a given depth, allowed to settle there for 15-30 sec, and then is slowly pulled to the surface. Pulling the net too fast will cause a bow wave and the net will be less efficient. The mouth of the stopcock is positioned into a sample-collecting bottle and the sample is then drained. This procedure may be repeated 3-4 times.

Qualitative net sampling will yield presence/absence information and can aid in the identification of rare species, but is not appropriate for accurate counting or biomass estimates. Numerous species or individuals can pass through even small mesh sizes, colonies can be disrupted by the net, and some fragile species may burst from excessive pressure. However, qualitative samples are excellent for taxonomic surveys because of the large number of specimens collected.

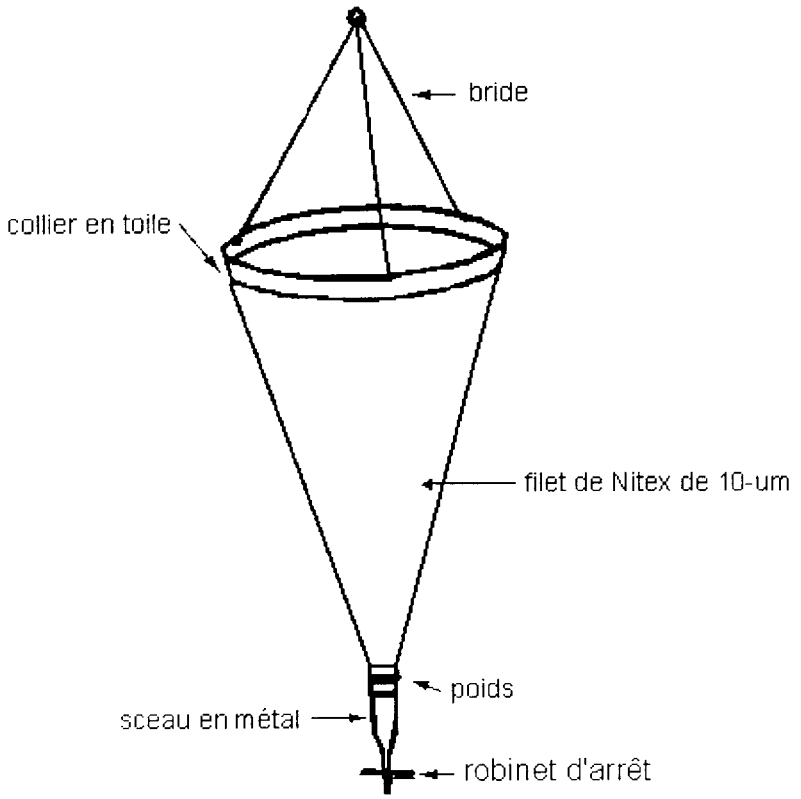

Figure 1: Filet à phytoplancton

Quantitative sampling

There are several reliable methods for obtaining quantitative phytoplankton samples, which are unconcentrated samples taken from a known volume of water. The most common method is the use of a discrete-depth water-bottle sampler such as a Van Dorn, which samples a constant volume of water (1-6 L). The opened sampling apparatus is lowered to the desired depth, the trigger is released, and the sample is entrapped. The sampler is then brought to the surface, shaken, and a subsample is removed.

The use of an integrating sampler (Shearer et al. 1985) allows a sample to be obtained from a predetermined depth range (Fig. 2). This apparatus consists of a 1-L amber bottle attached to a weighted harness. A rubber stopper fitted with intake and outlet hoses is positioned in the mouth of the bottle. The intake hose is attached to a closing mechanism and opens when triggered. Technical information on the construction of this sampler

can be found on the ELA web site
(http://www.umanitoba.ca/institutes/fisheries).

The closed, integrating sampler is lowered to the bottom of the desired depth range (i.e. sampling 4-7 m, the sampler would be lowered to 7 m), the intake line is triggered open and the sampler is raised over the given depth range at a constant rate (1 m·10 sec-1). The bottle is quickly repositioned at the bottom of the desired depth range and again raised at a constant rate. This process is repeated until there are no air bubbles at the water surface, which indicates the bottle is full. The sampler is then retrieved into the boat, shaken, and a subsample is removed.

An integrated sample can also be collected from shallow water bodies by using a 3-6-cm diameter ridged, plastic pipe, 1-2 m in length. The pipe is gently inserted vertically into the water column and the top is capped off by covering it tightly with a hand. The pipe is lifted out of the water and is drained into a bucket. The water sample in the bucket is mixed well and a subsample is removed.

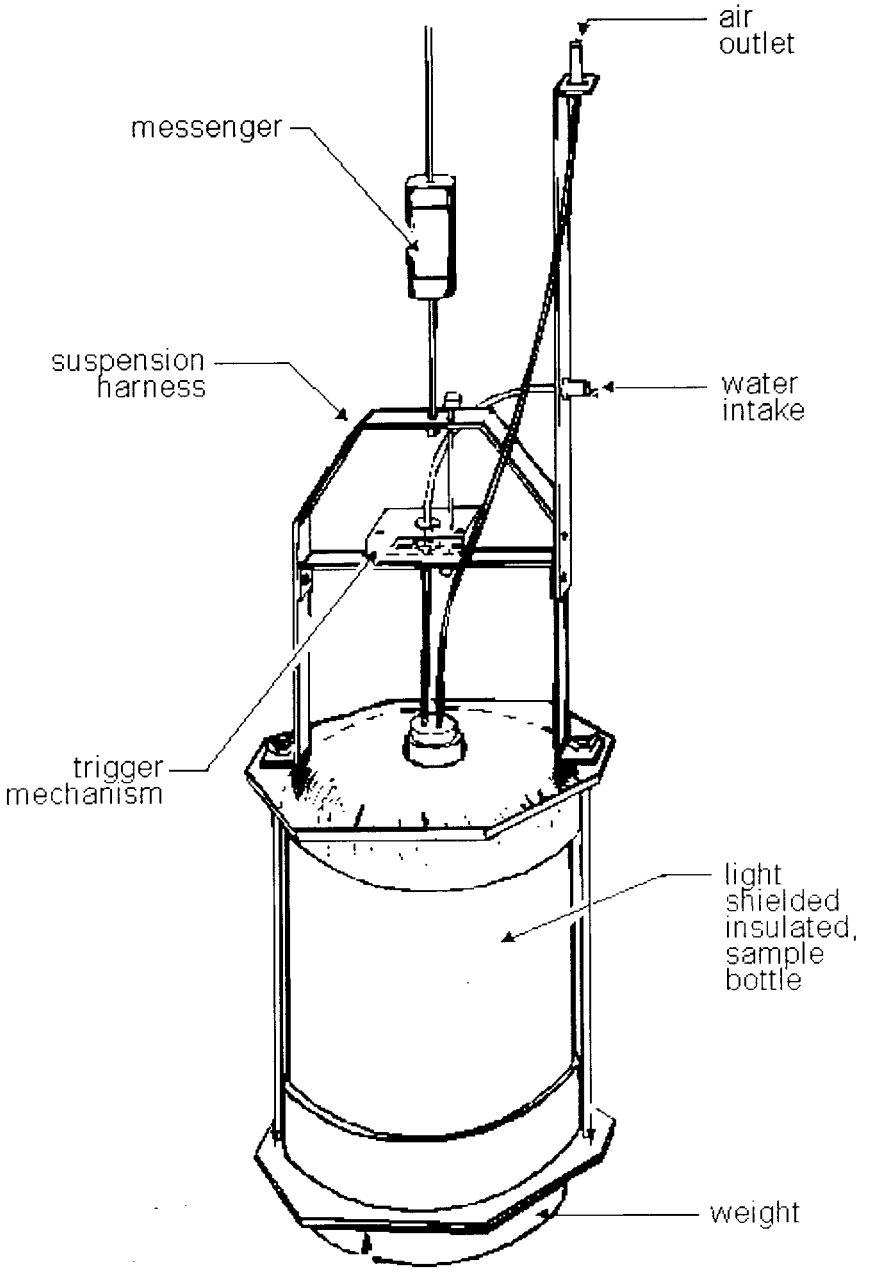

Figure2. Integrating sampler (Reprinted from Shearer *et al.* 1985 by permission of J.A. Shearer, Freshwater Institute, Winnipeg, Manitoba)

The above-mentioned methods all provide samples appropriate for accurate counts (i.e. number of cells·L-1) and species identification. However, an integrated sampler allows an entire water column to be examined in fewer samples than for a discrete sampler, thereby reducing time-consuming microscopic analyses.

Preservation

Phytoplankton samples should be preserved by both acid iodine solution (Lugol's) and an acidified formalin solution (FAA; see recipes below) and stored in glass vials (opaque glass would increase shelf life) fitted with a polyethylene screw-cap lid. Both of the recommended preservatives have limitations. Lugol's solution has a shelf life that is affected by light. It is excellent for preserving chrysophytes but it makes the identification of dinoflagellates difficult, if not impossible. FAA may cause thin-walled cells to burst. For best results, it is recommended that algal samples be preserved first with Lugol's (0.05-1% by volume) followed immediately by FAA (2% by volume). Color is an important taxonomic characteristic, especially for bluegreen algae. Formalin is a good preservative for green and bluegreen algae and dinoflagellates because cell color remains intact if samples are stored in the dark.

Lugol's solution can be prepared using 100 g I, 200 g KI, 200 mL glacial acetic acid, and 2000 mL of distilled water. Because it is light sensitive, this solution must be stored in a dark bottle. FAA is a solution of equal volumes of formaldehyde (37%) and glacial acetic acid.

Sample labeling and field notes

All samples and subsamples require accurate labeling. The label should contain information such as location, time, date, depth, type of sampling gear used, and the name of the collector. Complimentary field notes should be kept containing a description of the sampling site, type of land vegetation surrounding the sampling site, general geology of the area (e.g. granite vs. limestone), and pertinent information on other variables that were also sampled (e.g. air and water temperatures, wind speed and direction, and unusual odors).

An inverted microscope equipped with phase/contrast illumination; 10X, 40X, and 100X objectives; 12.5X eyepieces (10X or 16X are also available); and micrometer eyepieces (graduated in µm) is required to identify and count the specimens collected. Photographic capability, although not necessary, can aid in confirming taxonomic decisions at a later date.
Identifications and counts for quantitative estimates are performed on preserved subsamples. Qualitative samples obtained using a phytoplankton net can be analyzed either live or preserved but they yield only presence/absence data.

Sample counting
The most common counting method used to quantify preserved phytoplankton samples is the Utermöhl (1958) technique as modified by Nauwerck (1963). (Staining is not required because samples have been preserved in Lugol's solution.) This method involves settling a known volume of sample into a counting chamber (Fig. 3). The density of phytoplankton will be dictated by the volume of subsample settled. If after settling a sample, the density of plankton is too great, a smaller volume of sample should be resettled. A simple counting chamber consists of three parts: (1) a bottom part, which is a piece of Plexiglas (40 mm2 and 6 mm thick) with a 20-mm diameter hole drilled through it. A glass coverslip is glued (Pliobond glue) over the bottom of the hole; this part of the chamber holds 2 mL; (2) the top of the chamber, which is a column that can vary in length and volume (8 and 48 mL are shown). The top chamber is secured to the bottom with a thin film of stopcock grease. Samples require 4 h of settling time for every 6 mm of counting-chamber height (e.g. samples in a chamber 36 mm high would need to settle for at least 24 h); and (3) a cover glass, which is used to cap the top of the counting chamber after it has been filled with a sample. The cover glass is 3 mm thick and 35 mm in diameter. It is clear, ground glass that allows light to pass through. After settling is complete, the top portion of the chamber is slid off the bottom and a second cover glass is slid into place over the bottom chamber, which now contains all the phytoplankton that have settled. Chambers should be cleaned with alcohol before reuse to remove residue from previous samples.

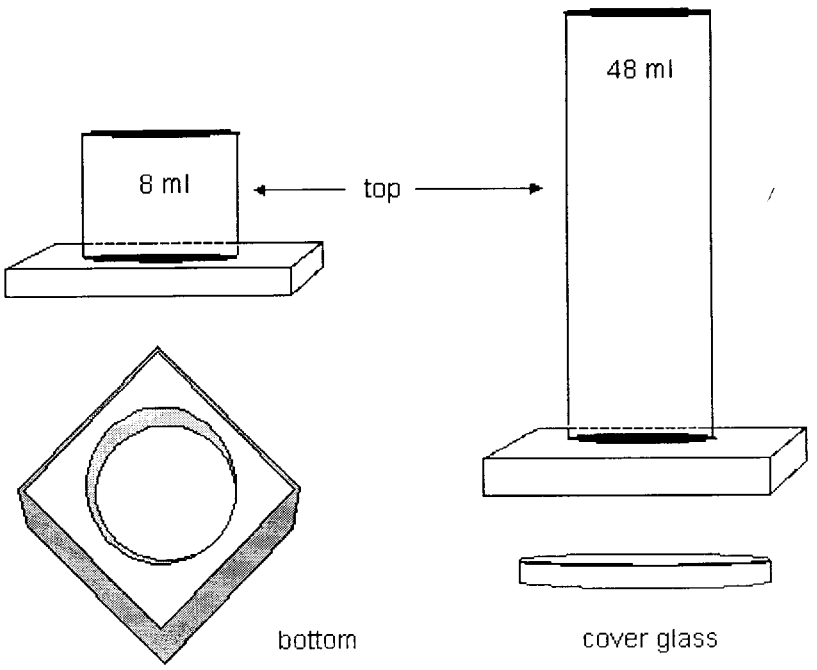

Figure 3. Counting chamber

The bottom chamber is then placed on the inverted microscope. Cells >15 µm are identified and counted using the 10X objective on transects that cover 50% of the chamber surface. Cells <15 µm are counted on a single transect, 200 µm wide, at the center of the counting chamber using the 40X objective. Cells must appear to be viable (i.e. chloroplasts intact). Cell fragments are not counted. Viable cells that are partially in a counting field on the right hand side are counted, but those on the left are omitted. For colonies, a small portion of the colony is counted, and the number of cells is then estimated. Filaments are counted individually. A minimum of 400-600 cells should be enumerated to assure that the count is representative of the sample. Cell counts are converted to wet-weight biomass by approximating cell volume. Estimates of cell volume for each species are obtained by routine measurements of 30-50 cells of an individual species and application of the geometric formula best fitted to the shape of the cell (Vollenweider 1968; Rott 1981). A specific gravity of 1 is assumed for cellular biomass. For accepted shapes and assignment of species see Rott (1981).

For example:

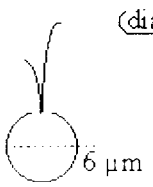

$$\frac{(\text{diameter})\ 6\ \mu m}{2} = 3\ \mu m$$

$$\text{cell volume} = \frac{4}{3}(\Pi r^3)$$

$$= \frac{4}{3}(3.14 \times 27)$$

There are numerous types of devices used to tally counts. They range from a simple tab counter to voice recognition computer systems.

Identification

The premise of a biodiversity monitoring program is to observe changes at the lowest identifiable taxonomic level over time, so accurate species identifications are important. Identifications can be enhanced by using both light and electron microscopy, by examination of live and preserved specimens, and, in the case of diatoms, by examination of acid-cleaned specimens. However, identification of algae is extremely difficult and it is recommended that samples be processed by an experienced taxonomist. Phytoplankton species are continually being described and classified. Therefore, it is necessary for those identifying phytoplankton to be abreast of current identification keys and those that are relevant to the geographic area in which sampling was done. Geitler (1932), Hubber-Pestalozzi (1941), Bourrelly (1966, 1968), Patrick and Reimer (1966, 1975), Komárek and Anagnostidis (1986), and Krammer and Lange-Bertalot (1986) are recommended keys for the identification of phytoplankton. The identifier should also have some knowledge of the life cycles of the different algae encountered and must be aware that species of phytoplankton can change size quickly as part of their reproductive phase.

Identifications can be checked/changed at a later time if subsamples are taken and archived. As a rough guide, 50-75 mL of each sample should be archived, and all unusual samples should be saved. Preservation methods described above should be followed.

PROTOCOLS FOR MEASURING
BIODIVERSITY:
Phytoplankton in Freshwater
D.L. Findlay and H.J. Kling

Data Analysis

All analyses should be routinely recorded on a count sheet, which should allow for the following entries: sample identification, species names, numbers of cells counted, cell length and width, and drawings of unusual species (Table 1). Data should then be stored in an electronic database; it is imperative that data entries be checked to eliminate unexpected errors. All variables required to transform the data into either biomass or number of cells·L-1 should be saved with the count and identification data.

Table 1: A phytoplankton count sheet containing all pertinent information

		PHYTOPLANKTON COUNT SHEET						
# species	correction factor[1]	group	species code[2]	count	length um	width um	cell vol um^3	species name
1	200	1	1022	7	0	0	2600	Gomphosphaeria sp.
2	200	1	1078	9	251	6	7096.9	Planktothrix agardhii (Gom,) Anagnostidis
3	200	2	2113	1	0	0	3200	Pediastrum duplex Meyen
4	200	5	5540	12	30	6	848.2	Aulacoseira italica v subarctica (O. Mull
5	200	5	5794	1	140	20	14660.8	Pinnularia flexuosa Cleve
6	200	6	6558	22	21	10	733	Cryptomonas erosa Ehrenberg
7	200	7	7632	4	34	34	20579.5	Gymnodinium sp.
8	200	7	7638	32	20	20	4188.8	Peridinium inconspicuum Lemmermann
9	7184	1	1065	16	6	4	50.3	Anabaena cylindrica Lemmermann
10	7184	1	1072	1	6	6	113.1	Heterocysts
12	7184	2	2105	21	10	6	188.5	Chlamydomonas spp.
13	7184	2	2112	4	4	4	33.5	Sphaerocystis schroeteri Chodat
14	7184	2	2115	8	4	4	11.2	Pediastrum tetras (Ehrenberg) Ralfs
15	7184	2	2121	14	8	4	67	Oocystis lacustris Chodat
16	7184	2	2127	3	10	10	174.5	Tetraedron minimum (Brunow) Hansgrig
27	7184	2	2131	4	6	4	33.5	Scenedesmus quadricauda v
18	7184	2	2132	12	8	4	44.7	Scenedesmus denticulatus Lagerhiem
19	7184	2	2136	12	5	5	65.4	Dictyosphaerium pulchellum Wood
20	7184	2	2138	68	49	1.8	83.1	Monoraphidium komarkovae (Nyg.) Komarkova
21	7184	2	2143	3	10	4	62.8	Monoraphidium minutum (Nag.) Komarkova-Le
23	7184	2	2178	1	12	12	301.6	Cosmarium sp.
24	7184	2	2201	21	3	3	14.1	Small greens
25	7184	4	4351	191	3	3	14.1	Small chrysophyceae
26	7184	4	4352	34	6	6	113.1	Large chrysophyceae
27	7184	4	4362	1	4	4	33.5	Kephyrion sp.
28	7184	4	4383	4	12	6	226.2	Dinobryon bavaricum Imhof
29	7184	4	4420	24	6	4	50.3	Gloeobotrys limneticus (G.M. Smith) Pasch
30	7184	5	5702	4	22	4	92.2	Achnanthes minutissima Kutzing
31	7184	6	6554	21	12	6	150.8	Rhodomonas minuta Skuja
32	7184	6	6568	6	8	4	44.7	Katablepharis ovalis Skuja
	Lake:223	Stratum: Epilimnion				Date 23JUI93		
Start depth: 0			End depth: 3.75					

1 The correction factor is used to convert the number of cells in the settled subsample to the number of cells L^{-1} (ie. 10 cells in a 5 mL subsample = 10 cells * 200 (correction factor)= 2000 cells L^{-1}).
2 Species are entered as numeric codes that are electronically linked to the species names.

Phytoplankton data need to be summarized and plotted to enable

Table 2. Daily phytoplankton biomass (mg·m-3) for Experimental Lakes Area Lake 149, 1990-1993.

	Daily phytoplankton biomass -- Lake 149								
Lake	Date	Cyanophyte	Chlorophyte	Euglenophyte	Chrysophyte	Diatom	Cryptophyte	Dinophyte	total
149	8-May-90	0.5	10.8	0	1241.3	36	58.3	92.8	1439.8
149	22-May-90	93.3	14.3	0	1835.9	73.9	47.2	357.1	2421.6
149	5-Jun-90	2.5	4.9	0	1555.3	208.4	81.6	1069.1	2921.9
149	19-Jun-90	4.1	27	0	1990.5	38.5	32.6	425	2517.8
149	3-Jul-90	35.5	29.6	0	314.2	24.5	34.1	760.4	1198.3
149	17-Jul-90	162.6	28.9	0	589	30.4	33.9	930	1774.7
149	31-Jul-90	50	23.6	2.1	608.3	15.7	28.9	1329.5	2058.1
149	14-Aug-90	55.9	11.7	0	790.1	12	49.9	1149.9	2069.5
149	28-Aug-90	23.3	12.1	0	934.8	9.8	42.4	927.3	1949.6
149	11-Sep-90	55.7	48.9	0	1297.6	118.9	153.3	275.1	1949.5
149	25-Sep-90	0	11.7	1.1	2033.4	103.3	50.4	301.5	2501.4
149	9-Oct-90	8.9	28.1	0	2522	30	81.6	339	3009.7
149	23-Oct-90	0	5.6	1.2	687.2	21.6	64.9	80.2	860.7
149	7-May-91	0	0	0	470	36	121.1	370.6	997.8
149	4-Jun-91	8.4	15	0	118.2	42.5	46.5	577.9	808.5
149	2-Jul-91	123	19.5	0	246.6	7.2	28.9	474.8	899.9
149	30-Jul-91	331.9	46.8	0	346.8	29.8	33.8	637.3	1426.4
149	27-Aug-91	61.9	27.5	0	795	17.9	30.9	478.5	1411.7
149	24-Sep-91	21.9	1.9	0	1702.4	14.1	49.6	59.6	1849.5
149	22-Oct-91	10.2	11.2	0	801.7	29.5	45.6	76.8	975
149	19-May-92	5.5	1.9	0	423	27.8	89.7	44	591.8
149	30-Jun-92	123.3	18.6	0	118.6	8.2	20.1	88.8	377.6
149	28-Jul-92	463.6	110.6	0	393.1	12.4	137.2	480.8	1597.7
149	25-Aug-92	8.9	45.3	0	1864.9	8.8	138.5	881.7	2948.2
149	8-Sep-92	32.3	41.2	0	3575.2	15.8	65.3	192.6	3922.5
149	6-Oct-92	0	23.9	0	2464.4	15.6	88.1	151.6	2743.6
149	4-May-93	0.5	13	1.5	335.1	25.7	38.4	182.1	596.4
149	18-May-93	0	9.1	0	564.7	70.8	46.5	228.8	920
149	14-Jun-93	162.2	9.1	0	271.8	27.4	24.7	395	890.1
149	13-Jul-93	387	3.5	0	127.8	1.5	22.9	505	1047.8
149	10-Aug-93	87.4	28.6	0	525.3	6	11.2	458	1116.4
149	7-Sep-93	57.4	24.8	0	1991.2	5.5	42.9	88.1	2209.8
149	5-Oct-93	15.6	33.5	0	1430.3	30.1	23.4	142.7	1675.5

Figure 4 depicts how the summarized phytoplankton data can be graphically presented. Composition (lower panel) is presented as the percentage contributed by each of the seven taxonomic groups to the community on a daily basis. Total daily biomass (upper panel) is presented as g·m-3.

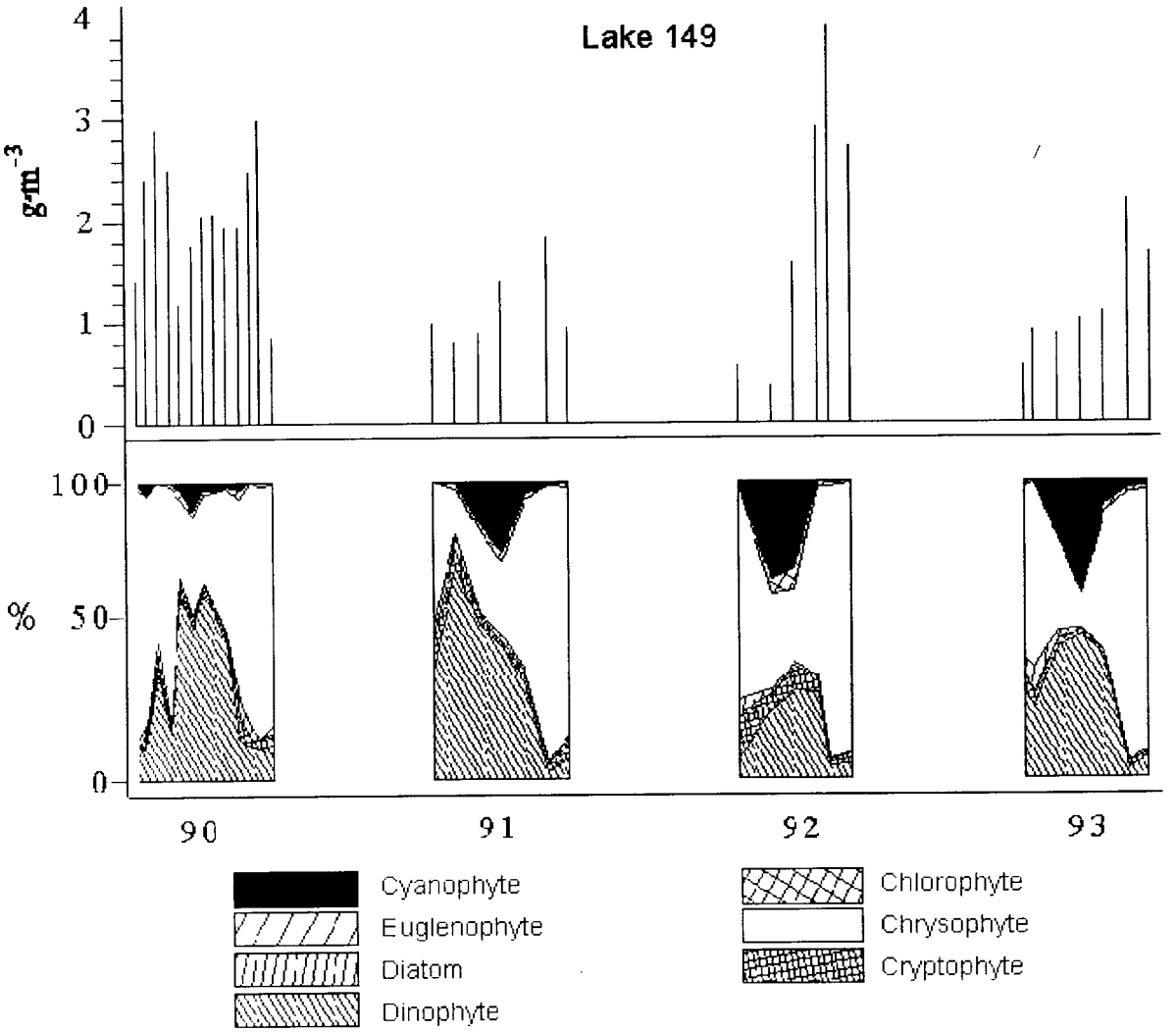

Figure 4. Phytoplankton biomass and composition for Experimental Lakes Area Lake 149 from 1990-1993.
Long-term changes in the biomass of a phytoplankton community can be assessed by comparing annual means to the long-term mean for each of the taxonomic groups (Fig. 5). The long-term mean is calculated by summing all annual means and dividing by the number of years involved.

Appendix 2. Phytoplankton Bench Sheet

Sample Number _____
Lab Number _____
Station & Depth _____
Date Collected _____
Data Set Number _____

Lake _____
Analyzed by _____
Date Analyzed _____
Method _____
Volume Analyzed _____

Cell Tally

	PICOPLANKTON - spheres Sweep 1 = Sweep 2 = Sweep 3 =
	PICOPLANKTON - rods
	UNIDENTIFIED OVOID - flagellates ( )( )( )( )( )( )( )( )( )( )/
	UNIDENTIFIED SPHERICAL - flagellates ( )( )( )( )( )( )( )( )( )( )/
	RHODOMONAS MINUTA VAR. MANNOPLANCTICA ( )( )( )( )( )( )( )( )( )( )/
	COCCOID - OVOID ( )( )( )( )( )( )( )( )( )( )/
	COCCOID - SPHERES ( )( )( )( )( )( )( )( )( )( )/
	ANACYSTIS MONTANA f MINOR ( )( )( )( )( )( )( )( )( )( )/
	HAPTOPHYTES SPP ( )( )( )( )( )( )( )( )( )( )/

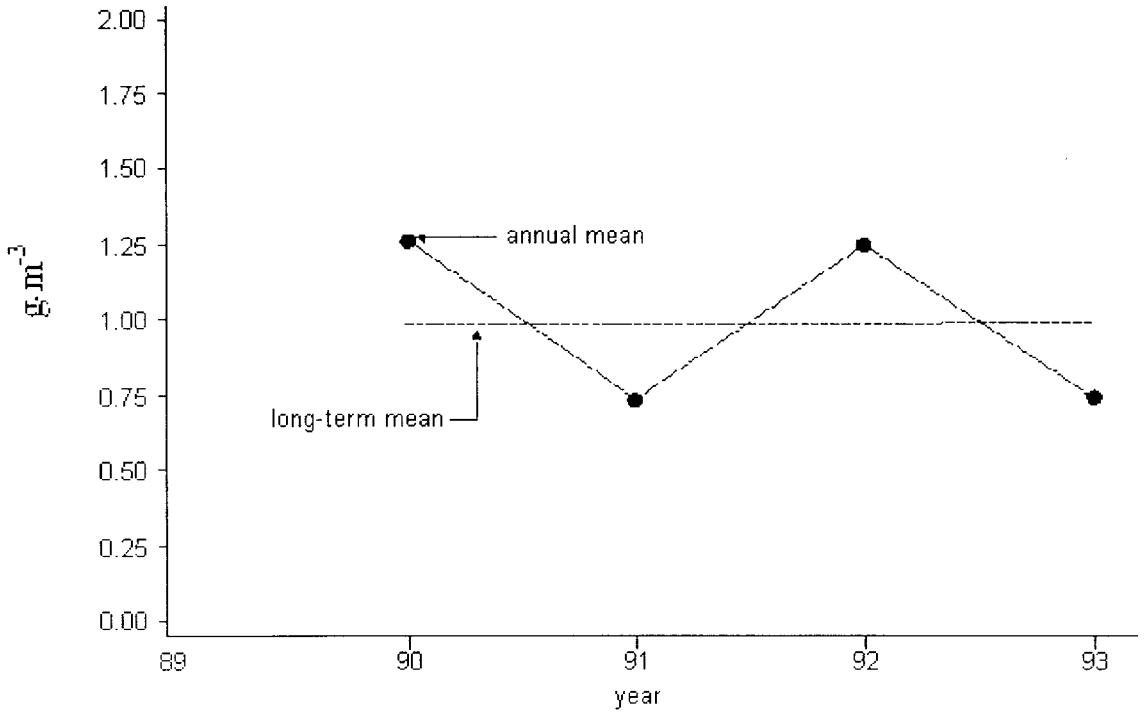

Figure 5. Annual mean vs. long-term mean biomass for Experimental Lakes Area Lake 149.

Compositional and numerical species changes can be assessed by the use of a measure of species richness, a species diversity index, or a similarity index. However, the accuracy of the taxonomy will affect the final results. Species richness is simply the number of species encountered, and is based on presence or absence. It can be applied to both qualitative and quantitative samples. Washington (1984) recommends Simpson's Diversity Index for phytoplankton:

$$D = 1 - \sum_{i=1}^{s} \frac{n_i (n_i - 1)}{n (n-1)}$$

where s = the number of species in a sample, n = the number of individuals in a sample, and n_i = the number of individuals of species i in a sample. This index is biased by the dominant taxa.

Percent similarity analysis (Washington 1984) uses biomass and can also be applied to quantitative samples:

$$\% \text{ similarity} = \sum_{i=1}^{s} \min (P_{1i}, P_{2i})$$

where s = total number of species in both samples, P_{1i} = proportion of the total biomass of species i in sample 1, and P_{2i} = proportion of the total biomass of species i in sample 2. This index allows direct comparison between two sites or stations, and also tends to favor the dominant species.

Ecological Monitoring and Assessment Network

PROTOCOLS FOR MEASURING BIODIVERSITY:
Zooplankton In Fresh Waters
Michael Paterson

Introduction

Zooplankton are small animals that float freely in the water column of lakes and oceans and whose distribution is primarily determined by water currents and mixing. The zooplankton community of most lakes ranges in size from a few tens of microns (Protozoa) to >2 mm (macrozooplankton). In terms of biomass and productivity, the dominant groups of zooplankton in most lakes are Crustacea and Rotifera and these protocols emphasize these groups. Zooplankton play a pivotal role in aquatic food webs because they are important food for fish and invertebrate predators and they graze heavily on algae, bacteria, protozoa, and other invertebrates. Zooplankton communities are typically diverse (>20 species) and occur in almost all lakes and ponds. Zooplankton are rarely important in rivers and streams because they cannot maintain positive net growth rates in the face of downstream losses.

Zooplankton communities are highly sensitive to environmental variation. As a result, changes in their abundance, species diversity, or community composition can provide important indications of environmental change or disturbance. Zooplankton communities often respond quickly to environmental change because most species have short generation times (usually days to weeks in length). Zooplankton communities respond to a wide variety of disturbances including nutrient loading (e.g. McCauley and Kalff 1981; Pace 1986; Dodson 1992), acidification (e.g. Brett, 1989; Keller and Yan 1991; Marmorek and Kormann 1993), contaminants (e.g. Yan et al. 1996), fish densities (Carpenter and Kitchell 1993), and sediment inputs (Cuker 1997).

Ecological Monitoring and Assessment Network

PROTOCOLS FOR MEASURING BIODIVERSITY:
Zooplankton In Fresh Waters
Michael Paterson

Environmental Factors

Zooplankton are susceptible to variations in a wide number of environmental factors including water temperature, light, chemistry (particularly pH, oxygen, salinity, toxic contaminants), food availability (algae, bacteria), and predation by fish and invertebrates. It is generally desirable to have as much information on these variables as possible. Clearly, this will frequently be impractical. Some variables are relatively easy to measure (e.g.

temperature), but others are more difficult (e.g. fish-predation intensity, toxic contaminants). Many environmental factors affect zooplankton only at extreme levels (e.g. toxic contaminants, salinity, oxygen) and will not be important in all lakes. Ideally, most sample collections should be accompanied by measures of water temperature, pH, and algal biomass (chlorophyll-*a* concentration or phytoplankton biomass). Temperature and pH can be measured using portable field instruments (some suppliers are listed in Appendix 1), whereas the estimation of phytoplankton biomass requires more involved techniques (see Findlay and Kling, EMAN protocols for phytoplankton).

Ecological Monitoring and Assessment Network

PROTOCOLS FOR MEASURING BIODIVERSITY:

Zooplankton In Fresh Waters

Michael Paterson

Sampling Procedures

Field operations - There are many different devices to sample zooplankton, including plankton bottles, traps, tubes, pumps and nets. The effectiveness of these different techniques varies for Crustacea, macrozooplankton, and Rotifera. Reviews of zooplankton sampling methods can be found in Welch (1948), Tranter and Fraser (1968), Schwoerbel (1970), Edmondson and Winberg (1971), Lind (1974), de Bernardi (1984), Johannsson et al. (1992), Omori and Ikeda (1984), and Harris et al. (2000). Appendix I provides a partial list of companies that sell equipment and other supplies for studying zooplankton.

(a) Crustacea - The simplest approach for estimating crustacean zooplankton biodiversity is to collect vertically-integrated samples from the entire water column using a net. A mesh size of 50 mm is usually sufficient to retain the smallest stages of planktonic Crustacea, with the possible exception of copepod nauplii (Nichols and Thompson 1991). The filtering area of the net should greatly exceed the mouth area to minimize clogging. With a mesh of 50 mm, it is recommended that nets have a net area to mouth area ratio of 1.8 or greater (Omori and Ikeda 1984). Nets should be hauled from just above the lake bottom to the lake surface at a speed of 0.5-1m sec^{-1} to minimize avoidance of the net by fast-swimming taxa. Net contents are then washed into a jar; the net should be rinsed at least twice from the outside using a plastic squeeze bottle. Ideally, the volume of water passing through the net should be estimated using a flow-meter (McQueen and Yan 1993). Many non-planktonic species of Rotifera and Crustacea are primarily associated with sediments and macrophytes so care must be taken to avoid sample contamination from these substrates. Further details on the use and design of nets can be found in Welch (1948), Tranter and Fraser (1968), Schwoerbel (1970), Edmondson and Winberg (1971), de Bernardi (1984), Omori and Ikeda (1984), and Harris et al. (2000).

Some studies may require more detailed estimates of zooplankton distribution (particularly with respect to depth) than can be easily obtained using nets. For these finer-scaled studies, it may be desirable to use

closing nets, horizontally-towed nets, plankton bottles, traps, or tubes. In very shallow or eutrophic lakes, nets may also become clogged by large phytoplankton or sediment, requiring the use of specialized samplers (e.g. Swanson 1978; Rey et al. 1987). The relative effectiveness of tubes, traps, and nets for sampling Crustacea is unclear and varies among lakes and in different studies (e.g. see Langeford 1953; Schindler 1969; Langeland and Rognerud 1974; Kankaala 1984; Boltovskoy and Mazzoni 1988; DeVries and Stein 1991; Johannsson et al. 1992; Knoechel and Campbell 1992). Plankton bottles, traps, and tubes typically sample smaller volumes of water than nets and, consequently, the occurrence and abundance of rare species may be more difficult to determine. Several studies suggest that pumps do not sample all zooplankton species equally (Langeford 1953; Boltovskoy and Mazzoni 1988; James 1991).

(b) Macrozooplankton – Macrozooplankton include taxa that reach comparatively large sizes (up to several cm in length) and typically occur at lower densities than microcrustacea or rotifers. Common macrozooplankton taxa include the cladocerans *Leptodora* and *Bythotrephes*, the dipteran *Chaoborus*, and the decapod *Mysis*. The simplest and most effective sampling technique for macrozooplankton is by vertical net hauls (Malley and Reynolds 1979; Bagge et al. 1996). Because of lower densities, the mouth diameter of the net should equal or exceed 0.5 m in diameter and it is frequently necessary to use 3-10 hauls to obtain sufficient numbers (>100) for accurate population estimates. Nero and Davies (1982) recommend a towing speed of 1/3 m sec^{-1}. Appropriate mesh sizes for macrozooplankton nets depend on the target organisms. Mesh sizes should not exceed 150 mm to capture the smallest instars of *Chaoborus* (Fischer and Frost 1997). Mesh sizes of 400 mm to 1mm can be used for *Mysis* (Chipps and Bennett 1996). As discussed previously, it is typically necessary to sample after dark, because many macrozooplankton taxa (e.g. *Chaoborus*, *Mysis*) become benthic during the day. Macrozooplankton often have highly aggregated distributions and may also undergo seasonal migrations between inshore and offshore regions (Wood 1956; Roth 1968; Grossnickle and Morgan 1979; Nero and Davies 1982, Hall and Yan, 1997). As a result, it may be especially important to sample at several stations to obtain accurate estimates of macrozooplankton population densities. Macrozooplankton abundance may also be estimated using horizontal net hauls, epibenthic sleds, SCUBA, and hydroacoustic techniques (Teraguchi and Northcote 1966; Grossnickle and Morgan 1979; Malley and Reynolds 1979; Nero and Davies 1982; Wagner-Döbbler and Jacobs 1988; Levy 1991; Bagge et al. 1996; Gal et al. 1999). In general, these methods are less accurate or do not provide for the taxonomic determinations essential for biodiversity estimates.

(c) Rotifera - Rotifers are smaller than crustacean zooplankton and are retained quantitatively only on meshes of 10-35 mm (Schindler 1969; Likens and Gilbert 1970). Nets are inappropriate for the quantitative collection of Rotifera because such fine meshes rapidly clog in most lakes (Ejsmont-Karabin 1978; James 1991). Rotifera must be collected with plankton traps, bottles, or tubes. If plankton bottles or traps are used, samples should be collected at different depths throughout the entire water column. Typically, a plankton bottle is lowered in an open position to the sampling depth and then closed by a weighted messenger. Rotifers can then be separated by gentle filtration through a 10-35 mm net (Likens and Gilbert 1970) or, preferably, by settling (Bottrell et al. 1976; James 1991). Unfortunately, settling is difficult in lakes with low densities of rotifers because large volumes of water must be processed to obtain sufficient numbers for reliable counts.

Sample preservation - Zooplankton samples can be preserved in either 95% ethanol or 5% formaldehyde. Counting samples preserved in ethanol is often difficult because of convection currents caused by rapid evaporative losses. Formaldehyde must be used with care because it is a carcinogen. Zooplankton preserved in formaldehyde often become distorted, which may interfere with identifications and measurements. A number of approaches can be used to reduce distortion including: (1) addition of 40 g L^{-1} of sucrose to formaldehyde solutions (Haney and Hall 1973); (2) maintenance of samples at low temperature (6°C) (Prepas 1978); and (3) narcotization with carbonated water or methanol prior to preservation in a formaldehyde-sugar solution (Gannon and Gannon 1975).

Ecological Monitoring and Assessment Network

PROTOCOLS FOR MEASURING BIODIVERSITY:

Zooplankton In Fresh Waters

Michael Paterson

Laboratory Procedures

Zooplankton samples frequently contain a large number of organisms and it is often impractical to count every individual. A number of methods have been developed to subsample zooplankton collections. The easiest approach is to remove quantitative subsamples from fully mixed samples using a wide-bore pipette. Edmondson and Winberg (1971) recommend that the opening of the pipette should exceed 4 mm. A wide variety of plankton splitters have also been developed for the subsampling of zooplankton samples (e.g. Kott 1953; Cushing 1961; Scarola and Novotny 1968). It is essential that subsampling results in a random collection of animals. To confirm that subsampling is random, replicate counts should be compared with a Poisson distribution using a Chi-square test (Prepas 1984).

Zooplankton are usually enumerated in gridded trays that prevent duplication of counts (e.g. Gannon 1971). A high-quality dissecting microscope is sufficient for counting Crustacea, although a compound microscope is required for taxonomic identifications. A compound microscope is needed to count and identify Rotifera. If Rotifera are separated from samples by settling, it may be useful to employ an inverted microscope. The number of animals counted will vary with the desired degree of sampling precision and the goals of the study (Prepas 1984). The coefficient of variation stabilization technique should be utilized to determine population abundance of a number of taxa simultaneously (Alden et al. 1982). This technique provides estimates of the abundance of common species to a pre-determined level of precision. Determination of the total number of species in a sample requires a rarefaction approach because the estimated number of species depends on numbers of animals counted (Sanders 1968; Hurlbert 1971; Colwell and Coddington 1994; Arnott et al. 1998). The cumulative number of species encountered is plotted against the number of animals counted and counting continues until an asymptotic species number is achieved. Colwell and Coddington (1994) review different methods for estimating asymptotic species number.

Biomass estimation - The most common method for estimating the dry weight of zooplanktonic Crustacea relies on converting estimates of length to biomass using length-weight regressions. Representative regression equations can be found in Dumont et al. (1975) and McCauley (1984). It is desirable to develop length-weight equations specific to an area if extensive study in a lake or region is planned (see McCauley 1984 for details). Lengths may be measured using an ocular micrometer or, preferably, using a computerized measuring system (e.g. Sprules et al. 1981; Roff and Hopcroft 1986; Hambright and Fridman 1994). Results from measuring systems can be combined with an electronic database to ease data entry and storage (e.g. Allen et al. 1994). For rotifers, geometrical formulae are usually combined with appropriate length measures to estimate biomass (see McCauley 1984 for formulae and a more complete description).

Identification – The core data for biodiversity estimates are taxonomic identifications and these require great care and effort. The taxonomy of zooplankton is complex and is not yet clearly defined for many groups, so identifications are best undertaken by taxonomic experts. Voucher specimens and samples should be archived so that taxonomic revisions can be incorporated at later dates. Some commonly used general keys are listed in Appendix II.

Protocol P-13-52

Analysis of USGS NAWQA Program Phytoplankton Samples

Frank Acker

1. PURPOSE

1.1. The U.S. Geological Survey's (USGS) National Water-Quality Assessment Program (NAWQA) samples phytoplanktonic algae by collecting whole-water samples (Porter et al. 1993, Moulton et al. 2002). This protocol describes quantitative procedures for analyzing the soft-algal component of phytoplankton and counting the total number of diatoms.

1.2. This procedure is quantitative and designed to provide data on algal densities (as cells per ml) and amount of algal biovolume (μm^3 per ml) at a sampling site. These data can be compared with data from other sampling sites in the NAWQA program throughout the United States. A similar protocol (P-13-39) describes the procedures for analyzing the diatom component of phytoplankton samples.

2. SCOPE

2.1. This protocol is applicable to the analysis of the soft-algal component of whole-water phytoplankton samples collected by the USGS NAWQA program. It includes procedures for identification (to lowest possible taxon level) and enumeration of algal species, taking measurements of the dimensions of some species for biovolume determinations, and recording of all data.

2.2. Personnel responsible for these procedures include sample preparers, phytoplankton analysts and those involved with data entry.

2.3. Two methods for identifying and counting phytoplanktonic algae are described: 1) using an inverted microscope and a modified Utermöhl sedimentation technique (Hasle 1978), and 2) using Palmer-Maloney counting cells.

3. REFERENCES

3.1. Hasle, G.R. 1978. The inverted-microscope method. Chapter 5.2.1 in Phytoplankton Manual. A. Sournia, ed. United Nations Educational, Scientific and Cultural Organization. Paris. 337 pp.

3.2. Moulton, S.R., II, J.G. Kennen, R.M. Goldstein, J.A. Hambrook. 2002. Revised protocols for sampling algal, invertebrate, and fish communities in the National Water-Quality Assessment program, U.S. Geological Survey Open-File Report 02-150. In Press.

3.3. Palmer, C.M. and T.E. Maloney. 1954. A new counting slide for nannoplankton. American Society of Limnology and Oceanography Special Publication Number 21. 6 pp.

3.4. PCER, ANSP. 2002. Analysis of Diatoms in USGS NAWQA Program Quantitative Targeted-Habitat (RTH and DTH) Samples. Protocol No. P-13-39.

3.5. PCER, ANSP. 2002. Preparation of Algal Samples for Analysis Using Palmer-Maloney Cells. Protocol P-13-50.

3.6. PCER, ANSP. 2002. Subsampling Procedures for USGS NAWQA Program Periphyton Samples. Protocol P-13-48.

3.7. Porter, S.D., T.F. Cuffney, M.E. Gurtz, M.R. Meador. 1993. Methods for Collecting Algal Samples as Part of the National Water Quality Assessment Program. U.S. Geological Survey Open-File Report 93-409, Raleigh, NC [39 pp] http//water.usgs.gov/nawqa/nawqa_home.html.

3.8. United States Geological Survey, National Water-Quality Assessment Program. 1997. Procedures for Processing NAWQA Algal Samples. Draft Manuscript. February 1997.

3.9. Weber, C.I. 1973. Biological Field and Laboratory Methods for Measuring the Quality of Surface Waters and Effluents. EPA-670/4-73-001. National Environmental Research Center, Office of Research & Development, U. S. Environmental Protection Agency. Cincinnati, OH.

4. DEFINITIONS

4.1. **Aliquot.** Is defined as a portion of a liquid sample or subsample.

4.2. **Fraction.** During algal analysis, an aliquot of the soft-algae subsample is used in a counting chamber (use of Palmer-Maloney and Utermöhl chambers are described here). Prior to analysis, the subsample may be concentrated or diluted forming additional solutions from which an aliquot can be taken. We have adopted the term "fraction" to identify the specific solutions that can be analyzed in counting chambers. We identify the original soft-algae subsample as fraction "a;" subsequent solutions, in their own containers, are identified as "b," "c," etc.

4.3. **Natural Counting Unit.** Each natural grouping of algae (i.e., each individual filament, colony, or isolated cell) is defined as a natural counting unit. Diatoms are an exception; each diatom cell is always considered a natural counting unit, even if attached to other cells. The main purpose of using 'natural counting units' is to prevent a colonial or filamentous form from dominating a count. It also facilitates the counting of algal forms which have linked cells that may be hard to distinguish.

5. APPARATUS/EQUIPMENT

5.1. Compound microscope with 10-15x, 40-50x and 90-100x objectives. Objectives are mounted below the stage for the inverted microscope method.

5.2. Settling chambers with 10-ml settling tubes. There are several basic varieties of the Utermöhl sedimentation chambers including: (1) the tubular variety (e.g., HydroBios Tubular Plankton Chamber) consisting of a threaded, fitted base with a round cover slip (#1, 27.5 mm diameter) base plate, and (2) the combined plate chamber variety (e.g., PhycoTech Utermöhl Counting Chamber) consisting of a plexiglass base unit with a round cover slip (#1, 27.5 or 25.1 mm) base plate and thick glass (0.2 mm) cover plate.

5.3 Pre-printed laboratory bench sheets including "USGS NAWQA Palmer-Maloney Fraction Preparation Bench Sheet" (See Protocol No. P-13-50), "Phytopl[illegible] [illegible]munity

Composition Bench Sheet (USGS NAWQA Program)" (Figure 1), and "Algal Biovolume Measurements" form (see Figure 2, Protocol P-13-63).

5.4. 20-ml vials with screw top caps.

5.5. Mechanical tabulator, 8 to 10 positions.

5.6. Palmer-Maloney counting cells with ceramic chamber, chamber depth of 0.4 mm and volume of 0.1 ml.

5.7. Glass microscope cover slips, rectangular, 22 x 50mm, #1 thickness.

5.8. Pasteur pipettes, 5.25 inch.

5.9. Rose Bengal dye, dissolved in 90% acetone.

6. METHODS

6.1. **Choose Analysis Method.** Both analysis methods, inverted microscope and Palmer-Maloney counting cell, result in similar counts when used correctly. The inverted scope is better when the original sample volume is limited (i.e., less than 400 ml) because high numbers of cells are needed for the Palmer-Maloney counts. Detritus, a problem with both techniques, is especially troublesome for the inverted microscope method.

6.2. **Pre-Concentrate Subsamples.** For both techniques, the original sample should usually be concentrated prior to settling in the Utermöhl chamber or adding to a Palmer-Maloney cell. This initial concentration should be approximately 5-10 times the original whole-water sample, leaving about 20 ml of concentrate for analysis. Samples are concentrated by settling and decanting (settle for at least 2 days) or by centrifugation (1000 g for 20 min). It is important to measure and record the original and final volumes, before and after concentration. In the USGS NAWQA Program, this step is usually performed during the subsampling procedure, using the "NAWQA Sample Volume/SubSample Form" (see Protocol P-13-48). This concentrated sample is then divided into at least two subsamples – one for soft-algae or phytoplankton analysis and one for diatom analysis. Phytoplankton analysis using Palmer-Maloney counting cells involves the preparation of "fractions" prior to analysis (Protocol P-13-50). The aliquots placed in the Utermöhl chamber are considered the "fractions," and volume, dilution or concentration data are included in the "Palmer-Maloney Fractions" table (accessible via the PHYCLGY database).

6.3. **Prepare Palmer-Maloney Counting Cell.**

6.3.1. Spread a small drop of Rose Bengal solution on the base of the chamber of a clean Palmer-Maloney counting cell and let dry.

6.3.2. Place a rectangular cover slip (#1 thickness, 22 x 50 mm) at 45° to the counting cell, covering about 1/3 of the chamber, but not across the center of the cell.

6.3.3. Thoroughly mix the Palmer-Maloney fraction and draw it into an elongated Pasteur pipette (5.25 inch). Quickly add the fraction drop-wise into the center of the chamber. When the surface tension starts to draw the cover slip across the chamber, adjust the sides of the cover slip so that the ends of the chamber are covered and the cover slip hangs over both sides of the ceramic portion of the counting cell. Then add glycerin to the area where the cover slip hangs over the ceramic portion. This seals the cover slip

to the counting cell temporarily; without excess heat or vibration, the counting cell can be used for a week or more.

6.4. **Prepare Utermöhl Sedimentation Chamber.**

6.4.1. Attach a glass cover glass to the bottom of an Utermöhl sedimentation chamber. For tubular varieties of settling chambers, seal a cover glass to the threaded end of the tube and screw the tube into the base assembly. Assemble the plate chamber type of settling chambers by sealing a cover glass on the bottom of the base, locking it into place with the metal ring, and sealing the cylinder on top of the base. Use a light amount of vacuum grease to seal the cover glasses and cylinders. It is critical that the cover glass be clean and grease-free.

6.4.2. Homogenize the concentrated samples by repeatedly inverting the sample bottle. Place a 10-ml aliquot of the sample into the assembled settling chamber.

6.4.3. Let the sample settle for at least 8 hours.

6.4.4. For the plate chamber type of Utermöhl chamber, drain the volumetric cylinder by sliding over the drainage hole. Slide the cover plate over the chamber without allowing air bubbles to form. Analysis should proceed within a few hours of removing the cylinder.

6.5. **Choose to count random fields or along transects.** Both methods (inverted microscope and Palmer-Maloney counting cell) involve counting phytoplankton cells in a chamber, by counting either random fields or along transects. Choose one of the following.

6.5.1. Determine random fields: Using a high dry microscope objective (40-45x objective, 400-450x total system magnification), identify and enumerate algae in selected, random fields. From each Palmer-Maloney counting cell or Utermöhl chamber, enumerate between 8 and 50 fields; use a second counting cell or sedimentation chamber, if necessary. Choose a random starting place in the upper left-hand quadrant of the counting cell and approximate the number of fields that must be analyzed (300 natural units need to be counted with a minimum of 8 and maximum of 100 random fields). Develop a pattern that allows for equal probability of landing in any area of the cell or chamber with the exception of the edges and the center. A maximum pattern with 50 fields is made by having a grid of 8 x 8, subtracting 3 or 4 fields in either direction of the center.

6.5.2. Determine transects: Using a high dry microscope objective (40-45x objective, 400-450x total system magnification) with a calibrated stage, identify and enumerate algae along transects, either horizontally or vertically across the chamber of the Palmer-Maloney cell or Utermöhl plate chamber. Without looking into the microscope, choose a location near the left edge in the upper third of the chamber (if vertical transects are analyzed, choose a location near the top edge in the left third of the chamber). Make a transect by moving only the horizontal stage control (or vertical control for vertical transects) a measured distance. Develop a pattern for the transects that will avoid the center and edges of the chamber. A second Palmer-Maloney cell or Utermöhl chamber can be used, if necessary (300 natural units need to be counted with a minimum of one complete transect).

6.6. **Enumerate 300 natural algal units.**

6.6.1. Using the pattern developed above (section *6.5.*), move the microscope stage to a new position in the pattern. Make all movements of the microscope stage without looking through the objectives.

6.6.2. Identify and enumerate all algal forms in the field of view: Enumerate algal forms using natural counting units. Natural counting units are defined as one for each colony, filament, diatom cell (regardless if colonial or filamentous) or unicell. With the exception of diatoms, identify algal forms to the lowest possible taxonomic level. Differentiate diatoms to the lowest practical taxonomic level. This will usually be genus, but use of categories like naviculoid, cymbelloid, centric, nitzschoid is appropriate.

6.6.3. Categorize diatoms as either "living" or "dead" at the time of collection, and quantify them separately. If there is any protoplast material in the frustule (usually stained reddish by the Rose Bengal), the diatom is considered to have been living when collected.

6.6.4. Count the number of algal cells comprising each multicellular counting unit.

6.6.5. Tabulate the data on a bench sheet or mechanical tabulator.

6.6.6. Repeat steps *6.6.1.*, *6.6.2.* and *6.6.4.* until 300 natural algal units have been enumerated. Count only "living" diatoms as part of the required 300 natural algal units.

6.6.7. Add and record the tallies of each taxon on the bench sheet. Record the number of cells for multicellular counting units in parenthesis beside the tally of natural counting units. Group all diatoms into one category – undifferentiated diatoms.

6.6.8. Record the number of fields or total length of the transect for the area that was observed.

6.7. **Enumerate larger, rarer taxa.** There is an additional, optional procedure that can be used for samples with low concentrations (less than five natural counting units) of large cells or colonies (maximum dimension greater than 100 µm). Using a low-power objective (10-15x), scan 20 fields or 4 transects. Count the larger, rarer taxa (as defined above). Enumerate as natural units and estimate the number of cells in each. Record the counts of each of the taxa on the bench sheets, noting the scan area (i.e., total area for the 20 microscope fields or 4 transects). Multiply the number of larger, rarer taxa by the ratio of the total area scanned in the regular count to the area scanned in this count. Record that number as the total count for that taxon.

6.8. **Measure cell biovolumes.** For each group of samples, measure the dimensions of the taxa that contribute most to sample biovolume.

6.8.1. Determine the taxa that need biovolume measurements by listing all the species in the samples collected in a NAWQA study unit that have accounted for 5% or more of a sample count (i.e., 15 or more natural units of the 300 natural units enumerated).

6.8.2. For each taxon requiring biovolume measurements, select a simple geometric figure matching the shape of the taxon as best as possible, and determine the dimensions that must be measured (see the "Shapes" table in the NADEDdat database). Record this

information on an "Algal Biovolume Measurements" bench sheet (See Figure 2, Protocol P-13-63), one per taxon.

6.8.3. Measure and record the dimensions of at least five specimens. If these measurements are not in the range of previous measurements, measure additional specimens until 15 specimens have been measured from the study unit. No more than five specimens should be measured from a single sample.

6.9. **Enter data.** Enter data recorded on the bench sheets into the following three tables of the PHYCLGY database.

6.9.1. Table "Non Diatom Count Information." There is one record for each analysis. Enter the following fields for each record:

6.9.1.1. **Sample ID, SubSampleID, Replicate ID, Palmer-Maloney Fraction ID** and **Count Replicate ID** describe the specific sample and fraction used.

6.9.1.2. **Count Type** = "37" for "Inverted Microscope Proportional (phytoplankton)" and "38" for Palmer-Maloney Proportional (phytoplankton)" counts.

6.9.1.3. **Worker ID** and **Worker Address ID** are codes for the analyst. These are listed on the bench sheets.

6.9.1.4. **Date Count Finished, Bench Sheet ID, Total Time, Microscope ID** and **Lens ID**, are found on the bench sheet and are mandatory for each analysis.

6.9.1.5. **Palmer-Maloney Field Volume** is found on the bench sheet and is mandatory for analyses using Palmer-Maloney cells and where algae were enumerated in fields (as opposed to enumerating along transects).

6.9.1.6. **Number Fields** is found on the bench sheet and is mandatory for analyses where algae were enumerated in fields (as opposed to enumerating along transects).

6.9.1.7. **VolumeScanned** is mandatory for analyses using Palmer-Maloney cells. For analyses enumerating fields, it is calculated by multiplying the Number of Fields by the Palmer-Maloney Field Volume. For analyses where phytoplankton were enumerated along transects, the VolumeScanned is calculated by multiplying the scan length in cm (from the bench sheet) by the Microscope Field Diameter in cm (found in the "Microscope Lenses" table of the PHYCLGY database) and then multiplying by 0.04, the depth of a Palmer-Maloney Cell in cm.

6.9.1.8. **Analysis Form ID, Number Counted** and **Corresp H_2O** Sample are not required or not applicable.

6.9.1.9. **Mag Changer** should be entered if applicable or if not applicable, = 1.

6.9.1.10. **Count Notes** is "Y" or "N" depending on whether there is a count note associated with the analysis.

6.9.1.11. **Validated, Validated By** and **Date Count Validated** will be entered, probably by the analyst, after verification of data entry.

6.9.1.12. **Phytoplankton Apparatus ID** is found in the "Phytoplankton Apparatus" table of the "PHYCLGY" database and refers to the code for the type of counting (Palmer-Maloney) or settling chamber (HydroBios, PhycoTech, etc.) used (and listed on the bench sheet).

6.9.2. Table "Non Diatom Count." There is one record for each taxon observed during the analysis. The following fields are entered for each record:

6.9.2.1. **Entry Order** is automatically incremented as data are entered.

6.9.2.2. **SampleID, SubSampleID, P-MFractionID, CountReplicateID** describe the sample and fraction used in the analysis.

6.9.2.3. **TaxonID** is the NADED Taxon Code for the taxon being entered.

6.9.2.4. **NumberCounted** field represents the number of natural units enumerated. The **NumberCells** is the total of number of cells for the specimens enumerated. The **NumberCells** is equal to the **NumberCounted** for diatoms and forms that are unicellular.

6.9.2.5. **RowNumber** is not entered for these analyses.

6.9.2.6. **TaxaNote** is "Y" or "N" depending if there is a taxa note for this particular taxon in this analysis.

6.9.3. The table "Biovolume Measurements" in the PHYCLGY database is updated by running the application "BioVol" (current version is 1.0.4) and entering data from the "Algal Biovolume Measurements" form.

6.10. **Calculation of phytoplankton abundances and biovolumes.** The calculation of phytoplankton abundance depends on the apparatus used during analysis. Biovolume values are determined by multiplying the abundance (cells/ml) by the average biovolume of each cell (μm^3). The average biovolume of each cell is determined by averaging all values for the taxon in the "Biovolume Measurements" table of the PHYCLGY database. If there are no records in the "Biovolume Measurements" table for the taxon, the program performing the calculation will use a predefined constant based on genus (for diatoms) or algae type (for non-diatoms). Equations for abundance calculations are given below. The calculations are performed at the time data are prepared for transmission to the NAWQA BioTDB. The "BioTDB export" application, written in MS Visual Basic, produces a table ("export_NAWQAResults") on the Phycology Section server (SQL; "Diatom"). This table, which contains the calculated biovolumes, can be accessed by other Phycology Section databases.

6.10.1. If the inverted microscope method was used in the analyses, phytoplankton abundance (cells/ml) is calculated as follows:

$$\text{cells/ml} = \frac{\text{count} \times \text{field dcf} \times \text{chamber area} \times \text{subsample dcf}}{\text{microscope field area} \times \text{\# of microscope fields} \times \text{chamber volume used}}$$

where:

count = "# cells" in the "Non Diatom Count" table; for diatoms, the number of cells is determined by dividing the "# cells" in the "Diatom Count" table by the total number of diatom cells enumerated and multiplying by the number of "# undifferentiated diatoms" in the "Non Diatom Count" table.

field dcf = "DC Factor" in the "Sample Volumes/Areas" table.

chamber area = "Chamber Area" in the "Phytoplankton Apparatus" table (in mm^2).

subsample dcf = "D/C Factor" in the "Subsample Information" table.

microscope fld area = ["Lense Fld Dia" from the "Microscope Lenses" table (in μm)] divided by 2000, squared and multiplied by Pi (will be in mm^2); use the "Lense ID" in the "Non Diatom Count Information" table to get the correct microscope lense that was used.

number of microscope fields = "#Fields" in the "Non Diatom Count Information" table.

chamber volume used = "FractionVolume" from the "Palmer-Maloney Fractions" table.

6.10.2. If Palmer-Maloney counting cells were used in the analyses, phytoplankton abundance (cells/ml) is calculated as follows:

$$\text{cells / ml} = \frac{\text{count x field dcf x subsample dcf x P - M dcf}}{\text{volume scanned}}$$

where:

count, field dcf and subsample dcf are defined as above.

P-M dcf = "D/C Factor" in the Palmer-Maloney Fractions" table.

volume scanned = "VolumeScanned" in the "Non Diatom Count Information" table.

PHY 41 REV.GS3 (2/02)

Academy of Natural Sciences
Environmental Group
Patrick Center for Environmental Research
Phycology Section

PHYTOPLANKTON COMMUNITY COMPOSITION Bench Sheet
(USGS NAWQA Program)

bench sheet #: **ANSP-GS-02-____-PP** project code: **GS708130**

study unit: **2001 Miami River Basins (MIAM)** subproj: **ANSP-GS-01-02-PP**
microscope: **L1015** lens: **Zeiss223165** PP apparatus: **4** count type: **38**
analyzed by:_____ __/__/2002 worker id: **24** address id: **1**

ANSP sample ID: **GSN** / subsample-fraction: / # fields:	**82**____ **PP1-**__ ____	**82**____ **PP1-**__ ____	**82**____ **PP1-**__ ____	**82**____ **PP1-**__ ____	**82**____ **PP1-**__ ____	**82**____ **PP1-**__ ____
blue-greens (Cyanophyta)						
dinoflagellates (Pyrrophyta)						
greens (Chlorophyta)						

PAGE 1 of 2

Figure 1. Phytoplankton community composition bench sheet (USGS NAWQA Program

PHY 41 REV.GS3 (2/02)

bench sheet #: **ANSP-GS-02-_____-PP** project code: **GS708130**

ANSP sample ID: **GSN**		82____	82____	82____	82____	82____	82____
yellow-greens (Chrysophyta)							
other phytoplankton phyla							
diatoms (Bacillariophyta)							
249999	<undifferentiated live>						
249998	<dead or empty frustules>						
# counting units (cells):		_____	_____	_____	_____	_____	_____

notes: _____

data entry by: _____ ___/___/2002 confirmed by: _____ ___/___/2002

PAGE 2 of 2

Figure 1 (cont'd). Phytoplankton community composition bench sheet (USGS NAWQA Program).

Standard Operating Procedure for Phytoplankton Analysis

Grace Analytical Lab
536 South Clark Street
10th Floor
Chicago, IL 60605

December 15, 1994

Standard Operating Procedure for Phytoplankton Analysis

1.0 Scope and Application

This method is utilized to identify, enumerate and measure phytoplankton taxa in samples collected from the Great Lakes. Algal taxa are identified to the lowest taxonomic rank possible. A listing of all organisms identified and their respective density and morphometric measurement for biovolume calculation is reported.

2.0 Summary of Method

The method consists of two parts - analysis of phytoplankton (excluding most diatoms) and analysis of diatom. For operational reasons, the first part of the analysis is also called "soft algae" analysis. The "soft algae" are defined as those that are either naked or have a cellulosic cell wall and cannot withstand acid digestion treatment. In contrast, diatoms have relatively "hard" silicious valves and the valves can tolerate harsh acid treatment. Initially a preliminary scan is made of a settled 10 mL sample in order to determine the volume to be used for each of the two analyses. For the soft algae analysis, organisms are enumerated in a settling chamber using an inverted microscope at 500x magnification. For diatom analyses, the samples are pretreated with strong oxidants and the cleaned samples are mounted on glass slides and enumerated using a compound microscope at 1250x magnification.

3.0 Sample Collection and Preservation

3.1 See United States Environmental Protection Agency Great Lakes Analytical Contract Operation Procedure for phytoplankton sample collection and preservation.

3.2 After the preserved phytoplankton samples arrive at the laboratory from the survey, an additional 10 mL of Formalin is added to each sample to enhance the storage life of the sample.

3.3 All sample containers and diatom slides must be properly labeled as follows:

a. Sample containers: Lake: Station, CRL and LAB Number; Sampling Date; Sample Type (Integrated, B-1, B-2..etc.).

b. Diatom slides: Lake; Station, CRL and LAB Number.

Note: CRL numbers are assigned by GLNPO to all samples-collected in the field, LAB numbers are assigned by the contractor in the laboratory, for internal use only, to facilitate the sample log-in and identification procedure. Each sample has its own CRL Number that corresponds to a specific LAB Number (see United States Environmental Protection Agency Phytoplankton and Zooplankton Sample Log-in Standard Operating Procedure).

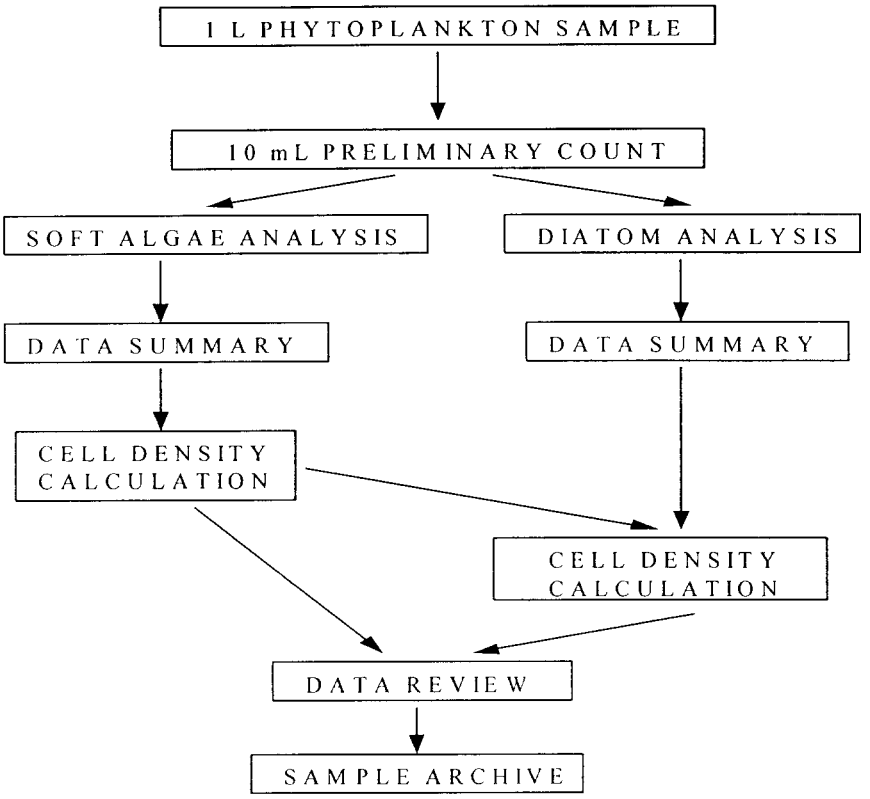

4.0 Determination of Sample Volume Required for Analyses

4.1 10 mL Preliminary Investigation

The 10 mL preliminary investigation is usually performed by the soft algae analysts in order to determine the appropriate volume of sample required for both soft algae and diatom analyses.

4.1.1 Apparatus

4.1.1.1 Inverted microscope with an objective system for magnification up to 150x (Leitz Diavert or another equal quality inverted microscope).

4.1.1.2 Tubular plankton chamber or combined plate chamber 10 cc.

4.1.1.3 Cover plate for plankton chamber, 33 mm dia., 2 mm thick.

4.1.1.4 Base plate for plankton chamber, 27.5 mm dia., 0.2 mm thick.

4.1.1.5 10 mL automacropipette.

4.1.2 Procedure

This procedure is done by settling 10mL of each sample and counting the total number of organisms and number of diatom cells within a 10 mm^2 area. No identifications are done at this time but any irregularities such as excessive sediment in the sample are noted. All information from the 10 mL preliminary count is recorded in a pre-printed data form (Appendix 1). This includes unusual observations such as poor sample preservation, high bacterial or fungal populations, occurrence of special or rare phytoplankton taxa ... etc.

Note: The definition of an organism for 10 mL preliminary counts is as follows:

A colony, a filament, or a single cell. The units of a colony or a filament are not counted as organisms at this time but the whole aggregate is counted as one organism.

Note: 10 mm^2 = One transect from edge of chamber to edge of chamber at 250x.

4.2 Determination of Sample Volume Settled

4.2.1 There is no exact limit set for determining the volume needed, each sample is examined for the number of organisms present, amount of debris in the sample and its distribution pattern. Large amount of debris often require that smaller then optimal volumes be settled.

4.2.2 Most samples are settled at 10 or 25 mL, with 25 mL being the usual volume. Only when samples are difficult or impossible to count are 5 mL or 2.5 mL samples used. The 50 mL samples are used when very low number of organisms are found in the samples.

4.2.3 The volume needed for setting (soft algae analysis) and for digestion (diatom analysis) is determined from the number of all organisms counted during the 10 mL preliminary investigation. However, the minimum volume for digestion is recommended to be 500 mL. For example:

10 mL preliminary counts

1) 101 organisms total
2) 103 diatom cells (Note: 1 cell has two frustules or valves)

Count needed (minimum)

1) 250 organisms total
2) 500 diatom frustules (250 cells)

Final volumes

1) 25 mL sample for sedimentation
2) 500 mL sample for digestion

4.2.4 The final volume may be slightly over-estimated to ensure that the minimum counts required are met. The preliminary count also helps to ensure that there is enough sample for both final investigations.

5.0 Sample Analyses

Samples are analyzed by data set, and a QC count is chosen for 10% of the samples in each set. The QC is chosen by the Team Leader who takes into account the 10 mL preliminary data and the diatom counts, if available.

5.1 Soft Algae Sample Analysis

Organisms are identified to the lowest taxonomic rank possible. Characteristics such as size, shape, color and the presence of flagella are used in the identification process. Any obscure or unidentifiable organisms are checked by the Team Leader or one other analyst. Drawings are made of the organism, complete with all sample identifiers (i.e. LAB and CRL numbers, Station number, Survey number, and analyst's initials). The drawing is then added to the permanent card file in the lab, and may also be sent out to other specialists for identification or verification. The card file is reviewed frequently and any additional information is added as received.

5.1.1 Apparatus

5.1.1.1 Inverted microscope with an objective system for magnification up to 600x (Leitz Diavert or another equal quality inverted microscope)

5.1.1.2 Tubular plankton chamber or combined plate chamber 10 cc.

5.1.1.3 Cover plate for plankton chamber, 33 mm dia., 2 mm thick

5.1.1.4 Base plate for plankton chamber, 27.5 mm dia., 0.2 mm thick

5.1.1.5 10 mL automacropipette

5.1.1.6 Syringe 20 mL with cannula, 14 gauge 4 inch

5.1.1.7 Long-neck disposable pipettes

5.1.1.8 Rubber bulbs for pipettes

5.1.2 Analytical procedures

5.1.2.1 Sample Sedimentation

The phytoplankton sample is mixed by gently inverting the sample bottle for 60 seconds. The predetermined sample volume (see Section 3.0) is loaded into a sedimentation chamber of appropriate volume. Samples should be added to the

chamber with a syringe (less than 10 mL) or macropipettor (10 mL or more). The sample bottle should be inverted at least once between each addition. This is done because larger organisms settle quickly and may remain in the bottle if the sample is simply poured. The chamber is topped with a round glass top plate.

5.1.2.2 Sample Settling

Algae are allowed to settle onto the base of the settling chamber. Since oil immersion may be used in the course of identification, the coverglass at the bottom of the chamber should not be thicker than 0.2 - 0.3 mm in thickness (or No. 1 coverglass). The time recommended for complete sedimentation varies with the height of the chamber, i.e. 8 cm/day to 4 cm/day depending on accuracy required in enumeration (Furet & Benson-Evans, 1982).

Approximate settling times necessary are as follow:

100 mL	----------	100 hours
50 mL	----------	50 hours
25 mL	----------	25 hours
10 mL	----------	10 hours
5 mL	----------	5 hours
2 mL	----------	2 hours

5.1.2.3 Sedimented Sample Analysis

Only "live" forms (chloroplast containing organisms) are counted and identified at 500x. Higher magnification may be used for identification when necessary.

5.1.2.3.1 The chamber of settled material is scanned and the dominant (four or five most common organisms) as well as subdominant taxa are determined. This is to give the analyst an idea of the sample composition as well as to insure that the sample is evenly settled.

5.1.2.3.2 Enumeration and identification are done by scanning parallel strips of 10 mm per strip (each strip has a width of 0.2 mm which gives an area of 2 mm^2). A minimum of three strips (30 mm or 6 mm^2) is required, including no less than 250 "live" organisms. If 250 organisms are not observed within the three strips, identification and enumeration are continued in strips until at least 250 are counted. The area counted is recorded as it is needed for cells per mL calculation.

5.1.2.3.3 The number of "live" cells are identified and enumerated to the lowest taxonomic rank possible. All "emptied" lorica from Chrysophyta are also identified and enumerated.

5.1.2.3.4 At least 10 specimens of each taxa are measured for cell volume calculations. When fewer than 10 specimens are present those present are measured as they occur. The measurements required are those which are necessary for the volume calculation of a solid which best approximates the shape of any particular organism. For most organisms the measurements are taken from outside wall to outside wall.

Those forms which are loricate (e.g., selected members of Chlorophyta, Euglenophyta and Chrysophyta) must have the active portion, i.e. protoplast, measured. Empty lorica are also counted, but not measured. Filamentous and colonial forms require measurements of the individual components.

5.1.2.3.5 Diatom cells are counted while making the strip counts at 500x. At this magnification the diatoms are enumerated and identified only as live pennates, empty pennates, live centrics, and empty centrics. Actual identification of diatoms and cell volume measurements are done under oil immersion (1250x) by another method (see Section 5.2). The only diatoms which must be counted at 500x are: Asterioneila formosa, Fragilaria capucina, Fragilaria crotonensis, Tabellaria flocculosa, Rhizosolenia eriensis and species of Rhizosolenia longiseta.

5.1.3 Archiving

Soft algae samples are to be archived one data set at a time.

5.1.3.1 Gently mix the remainder of the phytoplankton sample by repeatedly inverting the bottle for about one minute. Carefully empty the sample into a 500 mL graduated cylinder and cover the cylinder with a plastic Petri plate. Record the volume of sample settled on a pre-printed phytoplankton archive form (Appendix 6). A larger and/or smaller graduated cylinder may be used depending on the volume remaining in phytoplankton sample bottle.

5.1.3.2 Rinse the sample bottle three times with a small amount of RO/DI or distilled water (about 5 mL). Empty the rinse water into the graduated cylinder.

5.1.3.3 Settle the sample for a minimum of seven days, but not more than 14 days. Do not disturb the cylinder.

5.1.3.4 At the end of the settling period, carefully siphon off the top of the water column without disturbing the settled materials. Generally, about 18-22 mL of the sample should be remaining in the cylinder.

5.1.3.5 Decant the remaining sample from the graduated cylinder into a pre-labeled 25 mL glass liquid scintillation vial. Rinse the cylinder two times with about 2 mL of RO/DI or distilled water and empty the rinse water into the vial. This is the archive sample.

5.1.3.6 Add about 0.5 mL of Formalin solution to the archived sample before putting the cap on the vial.

5.1.3.7 Store the archived sample in a pre-labeled tray/box.

5.1.3.8 Record the archived sample information (CRL number, lab number, station number, original volume and concentrated volume) into the computer using DBASE III + data management program.

5.2 Diatom Sample Analysis

Diatom identifications and enumerations are performed on prepared slides. Because the cellular contents of diatoms obscure the wall markings on which the taxonomy is based, the organic matters inside the cell must be removed (oxidized) prior to identification.

5.2.1 Apparatus

5.2.1.1 Research quality compound microscope with an objective system of magnification up to 1400x (Letiz Dialux or another equal or better quality compound microscope).

5.2.1.2 Beakers - 300 and 600 mL

5.2.1.3 Hotplate

5.2.1.4 Centrifuge

5.2.1.5 Centrifuge tubes, graduated 15 mL

5.2.1.6 Cover slips, round, #1 thickness, 22 mm diam.

5.2.1.7 Precleaned microscope slides, 25 X 75 mm.

5.2.1.8 Long-neck disposable pasteur pipettes

5.2.1.9 Rubber bulbs for pipettes

5.2.1.10 Slide Warmer

5.2.2 Reagents

5.2.2.1 HNO_3 Nitric Acid (concentrated)

5.2.2.2 H_2O_2 Hydrogen peroxide (30% solution)

Hydrogen peroxide must be kept in an air-tight container, store in dim light or in the dark, and in a refrigerator.

5.2.2.3 $K_2Cr_2O_7$ Potassium dichromate

5.2.2.4 Hyrax™ mounting media

5.2.2.5 Toluene or Xylene

5.2.2.6 "Leitz" immersion oil

5.2.3 Cleaning Of Diatoms Valves and Slides Preparation

This section describes a method for cleaning diatom valves and preparing permanent diatom slides.

5.2.3.1 Cleaning of Diatoms

The first three steps of the diatom cleaning procedure must be carried out under the hood.

5.2.3.1.1 A specified volume (see Section 4.0) of uniformly mixed sample is poured into a 600 mL beaker. The recommended minimum volume is 500 mL. Mix the sample by gently inverting the sample bottle for a minimum of one minute.

5.2.3.1.2 Add 20 mL of concentrated HNO_3 to digest organic matter in the sample. Place beaker on a hot plate and concentrate sample to approximately 20 mL by heat evaporation. Allow sample to cool and transfer to a 300 mL beaker. Rinse the side of the 600 mL beaker several times with DI/RO water and transfer the rinse water to the digested sample.

5.2.3.1.3 Adjust the volume of the digested sample to 150 mL with DI/RO water. Further oxidize the sample with 25 mL of 30% H_2O_2. Accelerate the process by adding a few grains of $K_2Cr_2O_7$. Place beaker on a hot plate and concentrate sample to approximately 10 mL by heat evaporation. Allow the sample to cool and transfer to a 15 mL graduated centrifuge tube.

5.2.3.1.4 Rinse the side of the beaker several times with DI/RO water and transfer the rinse water to the centrifuge tube. Fill the tube with DI/RO water and centrifuge at low speed (1500 rpm) for 30 minutes.

5.2.3.1.5 Draw off all but 0.5 mL of supernatant in the centrifuge tube using a vacuum system. Take care not to disturb the pellet at the bottom of the tube. Add approximately 10 mL of DI/RO water to the tube and gently shake the sample using a vortex mixer. Recentrifuge the sample for 30 minutes at low speed (1500 rpm). Repeat Step 5.2.3.1.5 10 times.

5.2.3.1.6 Upon final centrifugation draw off all but 0.5 mL of supernatant. Bring volume up to approximately 5 mL with DI water. This is the "cleaned" sample to be used to prepare diatom slide for analysis.

5.2.3.2 Diatom Slide Preparation

Where possible, two duplicate slides should be made from each sample. The second slide will be sent to a repository at a later date.

5.2.3.2.1 Place a clean coverslip (thickness: No. 1; size 22 mm, circular) on a slide warmer (150-200°F).

5.2.3.2.2 Gently mix the sample and pipette about 0.25 mL aliquot of the sample on a coverslip and let dry. Examine the dried coverslip under the microscope. If the diatom density is not sufficient for counting, dry more sample on to the coverslip.

5.2.3.2.3 Add a small drop of Hyrax mounting medium to the center of a clean prelabeled slide (75 X 25 mm). If the Hyrax mounting medium is too viscous, add a few drops of toluene and/or xylene to dilute the medium.

5.2.3.2.4 Mount the coverslip, diatom side down, on the slide and place on hotplate.

5.2.3.2.5 Allow solvent to evaporate until bubbles are no longer formed under the coverslip. Remove from the hotplate.

5.2.3.2.6 Press coverslip gently with pencil eraser to extrude excess Hyrax immediately after removing from heat as the medium sets up very quickly.

5.2.3.2.7 Allow the slide to cool and remove excess Hyrax before examining. It will scrape away easily with a razor blade if all of the solvent is removed: if it is sticky, return to the hotplate to remove any remaining solvent.

5.2.3.2.8 Clean and label (CRL number, LAB number, Station number) the slide.

5.2.4 Diatom Enumeration and Identification

Diatoms are identified and enumerated to lowest taxonomic rank possible at 1250x.

5.2.4.1 A minimum of 500 frustules is counted (2 frustules = 1 diatom cell) per sample (slide).

5.2.4.2 At least 10 specimens of each taxa are measured (wall to wall) for cell volume calculations. When fewer than 10 specimens are present, those present are measured as they occur (Appendices 4 & 5).

5.2.5 Archiving

5.2.5.1 After the diatom slides are made, transfer the remainder of "cleaned" sample to a pre-labeled 9 mL glass vial.

5.2.5.2 Store the diatom archived sample in a box for future reference.

6.0 Calculations

6.1 Report the results of the sample sedimentation procedure as cells per mL which is calculated as follows:

$$cells/mL = \frac{C \times TA}{L \times W \times V \times S}$$

Where: C = *cell count*
L = *length of strip (mm)*
W = *width of strip (mm)*
V = *volume of chamber (mL)*
S = *number of strips counted*
TA = *total area of chamber bottom (mm^2)*

Note: Calculation factor listed at the bottom of Appendix 3 is equal to:

$$\frac{TA}{L \times W \times V \times S}$$

6.2 Reasonable approximations of geometric shape and mean dimensions will be reported so that cell volume estimates can be determined.

6.3 The data from the diatom slides is reported as percent composition of the 1250x count. This percent is applied back to the diatom counts at 500x to determine a cells/mL count for each species.

6.3.1 Calculate the total live diatom cells/mL as per formula in Step 6.1.

6.3.2 Calculate the percent composition of the pennate and centric diatom taxa on the prepared slide by dividing the number observe by the total pennate and total centric diatom values enumerated respectively.

6.3.3 Calculate the cells/mL for each diatom taxon by multiplying the total live pennate and centric diatom cells/mL (from the soft algae analysis) by the percent pennate or centric diatom counts respectively (from the diatom analysis).

7.0 Quality Control and Method Precision

7.1 Ten percent of all samples collected are analyzed in duplicate. At least one duplicate count is done per data set if the data set contains less than 10 samples. This includes identification, and tabulation of data. Data shall be calculated for the groups below:

Cyanophyta	Other minor divisions
Chlorophyta	Indeterminable forms
Chrysophyta	Pennate Diatoms
Cryptophyta	Centric Diatoms
	Total phytoplankton

The relative percent difference (RPC)) between duplicate determinations shall be compared to the guidelines listed below:

Cyanophyta (Picoplankton + Cyanophyta)	56%	
Chlorophyta	82	*
Chrysophyta	87	*
Cryptophyta	52	
Others	22	
Unidentified	75	
Pennales (Live + Empty)	80	***
Centrales (Live + Empty)	72	****
Total	48	

* Cells must number >140 before RPO guideline can be applied
** Cells must number >198 before RPD guideline can be applied
*** Cells must number >98 before RPO guideline can be applied
**** Cells must number >274 before RPD guideline can be applied

$$RPD = \frac{(larger\ value) - (smaller\ value)}{Average\ value} \times 100$$

7.2 Determinations which exceed the control guidelines listed above may require re-analysis unless:

7.2.1 The RPO value is the result of low density (especially true for the other minor divisions category).

7.2.2 The RPO value is the result of chance occurrence of colonial forms which are enumerated as individuals thus skewing the population estimate.

7.2.3 Other reasonable explanations can be provided to explain the differences between counts.

7.3 Previously calculated RPD values are used to determine the consistency of the identifications between analysts at the division level, as they only compare total cell numbers and not actual species identifications.

7.3.1 If the calculated values fall outside RPD Guidelines and no explanation can be found, the sample may be reanalyzed by either or both analysts or a third analyst, where necessary.

7.3.2 If the sample data are accepted by the analysts, they are then submitted to the Team Leader for his or her approval.

7.4 Photographic and Line-drawing Record

Photographic records of diatom and other phytoplankton taxa should be taken. Resulting positive prints should be enlarged to a specific diameter (i.e. 1000x) and attached to 5 x 8 index cards or 8½ x 11" sheets. The card must contain the following information:

a) Taxon name with dimensions and magnification
b) Photograph with negative reference number (if any)
c) Sampling date and location
d) Location of specimen on slide (diatoms only)
e) Slide identification number (diatoms only)
f) Comments
g) Name of analyst

Example format:

Taxon:_____ Photograph(s)/Line Drawing(s)

Dimensions: ___X___µm

Comments: _____

_____

Slide ID: _____ Location: _____

Sampling date: _____ Analyst: _____

This continuously updated file serves as the quality control reference document for diatom and other phytoplankton taxa. The file also serves as reference standard for the questionable and unidentifiable forms.

8.0 Safety and Waste Disposal

Proper PPE should be worn in the laboratory while handling and preparing samples for analysis.

especially during the digestion process. Follow all laboratory waste disposal guidelines regarding the disposal of acid waste. Do not discard samples containing acid into the sink. All waste should be placed in a designated, and labeled, waste drum.

9.0 References

9.1 Standard Operating Procedure For The Analysis Of Phytoplankton - U.S. E.P.A. - GLNPO 1987. Prepared by the Bionetics Corporation.

9.2 Furet, J.E. and K. Benson-Evans. 1982. An evaluation of the time required to obtain sedimentation of fixed algal particles prior to enumeration. Br. Phycol. J. 17: 253-258.

9.3 U.S. E.P.A. Great Lakes Program Office. 1987. Analytical Contract Operation Procedure for Phytoplankton Sample Collection and Preservation.

9.4 Utermohl, H. 1958. Zur vervoilkommnung der quantitativen phytoplankton-methodik. Mitt. Int. Ver. Limnol. 9. 38 pp.

9.5 Phytoplankton Sampling And Preservation Standard Operating Procedure - U.S. E.P.A. 1994. Prepared by the Enviroscience Corporation.

Appendix 1. Great Lakes - Phytoplankton Samples

Preliminary Investigation
 # Organisms in 10 mL - Min. Area = 15 mm²

Sample Number	Station # & Depth	# Organisms		Total Vol. Needed	Comments
		>10 µm	<10 µm		

Appendix 3. Phytoplankton Analysis

Lake _____ Sample Number _____
Analyzed by _____ Lab Number _____
Data analyzed _____ Station & Depth _____
Method _____ Date Collected _____

TOTALS	@ 500x		
Picoplankton			_____ cells/mL
Cyanophyta (Blue-greens)			_____ cells/mL
coccoids	_____		
filaments	_____		
Chlorophyta (Greens)			_____ cells/mL
coccoids	_____		
filaments	_____		
flagellates	_____		
Desmids	_____		
Chysophyta (Golden Browns)			_____ cells/mL
coccoids	_____		
flagellates	_____		
Haptophytes	_____		
colorless flagellates	_____		
Cryptophyta			_____ cells/mL
Pyrrhopnyta (dinoflagellates)			_____ cells/mL
Euglenophyta (Euglenoids)			_____ cells/mL
Xanthophyta (Yellow greens)			_____ cells/mL
Chloromonadocnyta (Chloromonads)			_____ cells/mL
Unidentified flagellates and coccoids			_____ cells/mL
Eacillariophyta (Diatoms-Live Cells)			_____ cells/mL
Rhizosoinia spp.			_____ cells/mL
live pennates	_____		_____ live cells/mL
empty pennates	_____		
live centrics	_____		_____ empty cells/mL
empty centrics	_____		
diatom valves (@ 1250x)	_____	=	_____ frustules

Dominant species

_____

_____

_____

_____

_____

Area scanned_____mm^2

Volume settled_____mL

Calculation factor _____

Total . . . . . _____cells/mL

Calculation factors for phytoplankton samples

	Volume of Sample Settled				
Strips	5 mL	10 mL	25 mL	50 mL	100 mL
1	49.0875	24.5438	9.8175	4.9088	2.4544
2	24.5438	12.2719	4.9088	2.4544	1.2272
3	16.3625	8.1813	3.2725	1.6363	0.8181
4	12.2719	6.1359	2.4544	1.2272	0.6136
5	9.8175	4.9088	1.9635	0.9818	0.4909
6	8.1813	4.0906	1.6363	0.8181	0.4091
7	7.0125	3.5063	1.4025	0.7013	0.3506

Appendix 4. Phytoplankton Analysis

Lake _____
Analyzed by _____
Date analyzed _____
Method _____

Sample Number _____
Lab Number _____
Station Number _____
Date Collected _____

TAXON	Cell Tally	Cells per mL	Cell Shape	Average Cell Dimensions				Cells Measured
				Length	Width	Depth	Diameter	

Appendix 5. Quality Control Data Sheet
Relative Percent Difference
Phytoplankton

CRUISE _____ CRL # _____ LAB # _____

STATION # _____

D.S. #

DIVISION	COUNT 1	COUNT 2	RPD	LIMITS
CYANOPHYTA	_____	_____	_____	56
CHLOROPHYTA	_____	_____	_____	82*
CHRYSOPHYTA	_____	_____	_____	87**
CRYPTOPHYTA	_____	_____	_____	52
others	_____	_____	_____	<23
unidentified	_____	_____	_____	75
PENNALES	_____	_____	_____	80***
CENTRALES	_____	_____	_____	72****
total	_____	_____	_____	48

* Cells must number >140
** Cells must number >198
*** Cells must number >98
**** Cells must number >274

Appendix 6. Phytoplankton Archive Data

	8 - 0 8 G _ _ _ _ _ _ conc. from mL orig. Vol. 1 L		8 - 0 8 G _ _ _ _ _ _ conc. from mL orig. Vol. 1 L		8 - 0 8 G _ _ _ _ _ _ conc. from mL orig. Vol. 1 L
	8 - 0 8 G _ _ _ _ _ _ conc. from mL orig. Vol. 1 L		8 - 0 _ _ _ 8 G _ _ _ _ _ _ conc. from mL orig. Vol. 1 L		8 - 0 _ _ _ 8 G _ _ _ _ _ _ conc. from mL orig. Vol. 1 L
	8 - 0 _ _ _ 8 G _ _ _ _ _ _ conc. from mL orig. Vol. 1 L		8 - 0 _ _ _ 8 G _ _ _ _ _ _ conc. from mL orig. Vol. 1 L		8 - 0 _ _ _ 8 G _ _ _ _ _ _ conc. from mL orig. Vol. 1 L
	8 - 0 _ _ _ 8 G _ _ _ _ _ _ conc. from mL orig. Vol. 1 L		8 - 0 _ _ _ 8 G _ _ _ _ _ _ conc. from mL orig. Vol. 1 L		8 - 0 _ _ _ 8 G _ _ _ _ _ _ conc. from mL orig. Vol. 1 L
	8 - 0 _ _ _ 8 G _ _ _ _ _ _ conc. from mL orig. Vol. 1 L		8 - 0 _ _ _ 8 G _ _ _ _ _ _ conc. from mL orig. Vol. 1 L		8 - 0 _ _ _ 8 G _ _ _ _ _ _ conc. from mL orig. Vol. 1 L
	8 - 0 _ _ _ 8 G _ _ _ _ _ _ conc. from mL orig. Vol. 1 L		8 - 0 _ _ _ 8 G _ _ _ _ _ _ conc. from mL orig. Vol. 1 L		8 - 0 _ _ _ 8 G _ _ _ _ _ _ conc. from mL orig. Vol. 1 L
	8 - 0 _ _ _ 8 G _ _ _ _ _ _ conc. from mL orig. Vol. 1 L		8 - 0 _ _ _ 8 G _ _ _ _ _ _ conc. from mL orig. Vol. 1 L		8 - 0 _ _ _ 8 G _ _ _ _ _ _ conc. from mL orig. Vol. 1 L
	8 - 0 _ _ _ 8 G _ _ _ _ _ _ conc. from mL orig. Vol. 1 L		8 - 0 _ _ _ 8 G _ _ _ _ _ _ conc. from mL orig. Vol. 1 L		8 - 0 _ _ _ 8 G _ _ _ _ _ _ conc. from mL orig. Vol. 1 L
	8 - 0 _ _ _ 8 G _ _ _ _ _ _ conc. from mL orig. Vol. 1 L				

Appendix 7. Phytoplankton Archive Labels

89-0081 89GA20112 LM 17 conc. from 41 mL orig. vol. 1 L	89-0082 89GA20132 LM 11 conc. from 522 mL orig. vol. 1 L	89-0083 89GA20152 LM 18 conc. from 477 mL orig. vol. 1 L
89-0084 89GA20172 LM 19 conc. from 435 mL orig. vol. 1 L	89-0085 89GA20192 LM 23 conc. from 445 mL orig. vol. 1 L	89-0086 89GA21112 LO 27 conc. from 505 mL orig. vol. 1 L
89-0088 89GA21112 LM 32 conc. from 487 mL orig. vol. 1 L	00-0000 00XX00X00 XX 00 conc. from 000 mL orig. vol. 1 L	00-0000 00XX00X00 XX 00 conc. from 000 mL orig. vol. 1 L
00-0000 00XX00X00 XX 00 conc. from 000 mL orig. vol. 1 L	00-0000 00XX00X00 XX 00 conc. from 000 mL orig. vol. 1 L	00-0000 00XX00X00 XX 00 conc. from 000 mL orig. vol. 1 L
00-0000 00XX00X00 XX 00 conc. from 000 mL orig. vol. 1 L	00-0000 00XX00X00 XX 00 conc. from 000 mL orig. vol. 1 L	00-0000 00XX00X00 XX 00 conc. from 000 mL orig. vol. 1 L
00-0000 00XX00X00 XX 00 conc. from 000 mL orig. vol. 1 L	00-0000 00XX00X00 XX 00 conc. from 000 mL orig. vol. 1 L	00-0000 00XX00X00 XX 00 conc. from 000 mL orig. vol. 1 L
00-0000 00XX00X00 XX 00 conc. from 000 mL orig. vol. 1 L	00-0000 00XX00X00 XX 00 conc. from 000 mL orig. vol. 1 L	00-0000 00XX00X00 XX 00 conc. from 000 mL orig. vol. 1 L
00-0000 00XX00X00 XX 00 conc. from 000 mL orig. vol. 1 L	00-0000 00XX00X00 XX 00 conc. from 000 mL orig. vol. 1 L	00-0000 00XX00X00 XX 00 conc. from 000 mL orig. vol. 1 L
00-0000 00XX00X00 XX 00 conc. from 000 mL orig. vol. 1 L	00-0000 00XX00X00 XX 00 conc. from 000 mL orig. vol. 1 L	00-0000 00XX00X00 XX 00 conc. from 000 mL orig. vol. 1 L

USGS
science for a changing world

Techniques of Water-Resources Investigations
of the United States Geological Survey

Chapter A4

METHODS FOR COLLECTION AND ANALYSIS OF AQUATIC BIOLOGICAL AND MICROBIOLOGICAL SAMPLES

L.J. Britton and P.E. Greeson, Editors

This report supersedes TWRI 5A4, published in 1977, entitled "Methods for collection and analysis of aquatic biological and microbiological samples," edited by P.E. Greeson and others.

Revised 1987
Book 5

LABORATORY ANALYSIS

BENTHIC INVERTEBRATES

Introduction

The invertebrate animals inhabiting the bottom of lakes and streams and other water bodies perform essential consumer functions in aquatic ecosystems and serve as food for fish and other vertebrates including man. They are the most frequently used biological indicators of environmental quality. These organisms have the advantages of relatively large size, which facilitates identification; limited mobility, which restricts them to a particular environment; and a lifespan of months or years, which enables adaptation to conditions that have existed for a long period of time. Moreover, many benthic invertebrates inhabit specific types of environments that, if changed, result in changes in the composition of the benthic community (Hynes, 1970). In general, a varied benthic fauna, without excessively large numbers of any one group, is considered to be characteristic of good quality water. As conditions change (for example, in the presence of organic pollution), the number of species decreases, but the number of individuals of the remaining species may increase. Toxic pollutants may eliminate all benthic invertebrates. Thus, knowledge of the kinds and abundance of benthic invertebrates helps to indicate water-quality trends in the aquatic environment. The extensive literature about interpretation of benthic-invertebrate data and water quality has been reviewed by Hynes (1960, 1970), Warren (1971), Cairns and Dickson (1973), Hart and Fuller (1974), and Hellawell (1978).

Collection

Benthic invertebrates vary in size, and there is no clear distinction between the smallest benthic forms and the largest micro-organisms. Bottom-living invertebrates that are visible to the unaided eye commonly are included with the benthos. Because many early studies of the benthic invertebrates emphasized the quantity available for fishfood, the U.S. Standard No. 30 sieve (0.595-μm mesh openings), which retains most of the biomass, came into use (Davis, 1938; Welch, 1948). The No. 30 sieve also has been used in water-quality investigations, and the American Public Health Association and others (1985) states that the bottom-living invertebrates collected for study, termed "macroinvertebrates," are those which are retained on a No. 30 sieve.

The mesh openings of sampling nets and sieves ideally should be selected based on the needs of a particular study. If the mesh size is so large that the smaller invertebrates pass through the net, erroneous conclusions about life cycles or biomass result (Hynes, 1970). Mesh that is too fine clogs rapidly, resulting in loss of invertebrates by backwash. The results of sampling using a coarse and a fine net on the catch of different sizes of a particular benthic species are not easily predictable (Macan, 1963, p. 281). Jónasson (1955, 1958) reports that the diameter of the head determines whether or not a dipteran larva will pass through a given mesh. His data indicated a 640-percent increase in the number of invertebrates in lake samples as the sieve size decreased from 600 to 200 μm. Other investigators have reported similar results from various aquatic environments. Significant differences between retention of total individuals and total taxa in U.S. Standard No. 30 and No. 60 sieves were reported for reservoir silt substrates (Mason and others, 1975). Schwoerbel (1970) concluded that "***in quantitative studies of the bottom, especially in problems of population dynamics in which immature larvae are of importance, a mesh size of less than 200 μm must be used, and in other respects the mesh width must be carefully adapted to the size of the animals selected." In a study of stream benthic sampling, Mundie (1971) reported that the younger (hence smaller) stages of invertebrates tend to predominate in a natural community. He concluded that even a mesh of 116 μm could enable 50 percent of the fauna to pass through, if the community contained large numbers of chironomid larvae and mayfly and stonefly nymphs. Mundie estimated that a net of 200- to 250-μm mesh would enable 70 to 80 percent of the fauna to pass through, but it still would be adequate for many purposes, such as general faunistic surveys and the estimation of biomass.

For these reasons, the U.S. Geological Survey has adopted the U.S. Standard No. 70 sieve (210-μm mesh opening) for retaining benthic-invertebrates collected as part of its water-quality investigations. Nets are to be 210±2-μm mesh-opening nylon or polyester monofilament screen cloth that has 35- to 44-percent open area. For uses requiring more rapid filtration, large-capacity screen cloth, made of 209-μm nylon monofilament, that has 56-percent open area may be used. These mesh sizes are small enough to retain many of the immature stages of the benthic invertebrates and, yet, are practical to use in flowing water. Special studies may require the use of the No. 30 sieve or other mesh sizes appropriate to the objectives. The size of mesh used always should be reported.

The mud usually should be washed from the sample, and this often results in prolonged immersion of the hands in water. During cold weather, wearing long-gauntlet rubber gloves can make this more bearable. To wash mud from the samples, put small quantities into a No. 70 or other appropriate sieve and agitate it gently ensuring that the mesh is

submerged in the water. Washing samples by pouring water through the sieve must be done slowly to avoid forcing small invertebrates through the mesh.

Four methods for benthic-invertebrate sampling are described based on the type of sampling, and three methods for preparation of microscopic mounts needed for taxonomic identification of specific benthic groups are described. Recommended sampling equipment are listed in the "Apparatus" section for the first four methods. For additional information on benthic-invertebrate sampling methods, refer to Welch (1948), Hedgpeth (1957, p. 61-86), Macan (1958), Albrecht (1959), Barnes (1959), Needham and Needham (1962), Cummins (1962, 1966, 1975), Hynes (1964, 1970), Southwood (1966), Schwoerbel (1970), Edmondson and Winberg (1971), Holme and McIntyre (1971), Cairns and Dickson (1973), Weber (1973), Elliott and Tullett (1978), Hellawell (1978), Elliott and others (1980), Elliott and Drake (1981a,b), Cairns (1982), and American Public Health Association and others (1985).

Faunal surveys

Qualitative faunal surveys determine the taxa present and may estimate the relative abundance of each taxon at each site. Because collection of rare taxa at each site is important, sampling should include a large area of bottom and as many habitats as feasible. Use of several collection methods at each site can increase the total number of taxa in the samples (Allan, 1975; Slack and others, 1976). Moreover, evidence indicates that the larger the sample collected for qualitative analysis, the greater the number of taxa (Elliott and Drake, 1981b). A faunal survey of a large sampling area, such as a lake or river, usually precedes a quantitative investigation but may be an end in itself (Elliott, 1971a).

There is no universally accepted method for sampling benthic invertebrates. However, no habitat should be overlooked if the objective is to obtain a representative collection of the benthic invertebrates, and different habitats may require different collection methods. The success of the method will depend on the experience and skill of the collector. Sampling should include specimens from rocks, plant beds, logs and brush, clumps of decaying leaves, and deposits of mud, sand, and organic detritus. In streams, areas of fast current, slow current, backwater, near the banks, and in deeper parts should be sampled. Rocks may be lifted by hand and examined for invertebrates as the surface dries. Tufts of algae and moss should be collected and examined for animals. Invertebrates may be dislodged from floating vegetation or rooted plants using a dip net, or samples of the plants may be collected using grappling hooks or rakes, and then the invertebrates removed. Methods for collecting plants are described in the "Macrophytes" section. More elaborate methods for sampling invertebrates living in or on plants involve enclosing a unit volume of the vegetation and surrounding water in a bag or box from which the invertebrates subsequently are removed (Welch, 1948; Gerking, 1957). Additional information on sampling is given in the "References Cited" at the back of this section.

Two types of collection devices are described: those using netting to concentrate the invertebrates dislodged from the substrate and those involving removal of the substrate. However, any collection method, including quantitative or hand methods, may be used for qualitative collection of benthic invertebrates.

Dip or hand net

The dip, or hand net, is the most useful general implement for collecting benthic invertebrates in wadable water and invertebrates living among floating plants in deeper water. The net can be used in water containing large concentrations of suspended sediment and among plants or large boulders to depths of 1 m or more. Macan (1958) described a method of working slowly upstream lifting rocks and holding the net to catch invertebrates swept into it. Clinging invertebrates were dislodged from rocks by vigorously swirling the rocks in the mouth of the net. Alternatively, the net may be held against the bottom, and the area immediately upstream disturbed by the hands or feet, enabling the current to carry invertebrates into the net. In still water, the net can be scraped rapidly along the bottom to catch easily dislodged invertebrates, or it can be swept through plant beds, probed into piles of brush, or used as a scoop to sample mud, silt, and deposits of leaves or other detritus. Additional information about dip-net sampling is given in the "Numerical Assessment" subsection.

Empty the net frequently either into a shallow, white tray, if the sample is to be sorted onsite, or into a wide-mouth container for transporting to the laboratory. Label and preserve each sample.

Dredges

As described by Hynes (1970, p. 237), dredges are instruments that are pulled across or through the bottom sediment and grabs are instruments that bite into the bottom from above. Grabs are considered to be quantitative sampling devices and are described in the "Distribution and Abundance" subsection.

Qualitative samples of benthic invertebrates from deep or swift rivers usually are collected using a dredge (Elliott and Drake, 1981b) (figs. 21, 22). The design varies, but often, large rocks are excluded; whereas, the smaller particles and the benthic invertebrates are retained in a mesh bag. The dredges developed by Usinger and Needham (1956) and Fast (1968) are examples. Dredges are lowered from a boat or bridge or even thrown from a high bank then pulled upstream along the bottom so the leading edge digs into and disturbs the sediment. The current from the flow of the stream plus the forward motion of the dredge carries invertebrates into the net. In still or slowly moving water, dredges should be pulled by a powered boat to prevent loss of active benthic invertebrates.

Elliott and Drake (1981b) compared four light-weight dredges for river sampling. Because of the variability between sampling units in the same sample, there was a lack of precision in estimates of the mean number of individuals indicating that the dredges are not suitable for quantitative sampling. Considerable variation also existed in their effectiveness as qualitative samplers for estimating the total number of taxa per sample. The largest efficiencies for a small sample ($n=5$) were for the medium (greater than 57 percent) and large (greater than 76 percent) dredges (called Naturalist's dredges) similar in design to that shown in figure 22. The mouth of the medium dredge was 45×17 cm and for the large version was 59×20 cm. Greater penetration depth into the substratum (range in modal particle sizes was 1–2 mm, 64–128 mm, and 128–256 mm) accounted for the superior performance of the Naturalist's dredges compared to the other types tested.

After collection, empty the dredge into a shallow tray or bucket, if the collection is to be sorted onsite, or into a wide-mouth container for transporting to the laboratory. Label and preserve each collection.

Numerical assessment

Relative or semiquantitative surveys are conducted to compare benthic communities or populations at a specific site for different sampling times or at different sites for the same sampling time. That is, the objective is to make within- or between-site comparisons. Accurate measurements of the total benthos are not obtained, nor are the estimates of relative abundance of each species in the samples necessarily reliable. Sampling effort is limited and, if using artificial substrates, may be restricted to a small area at each site. Because different sampling methods will produce different results, the

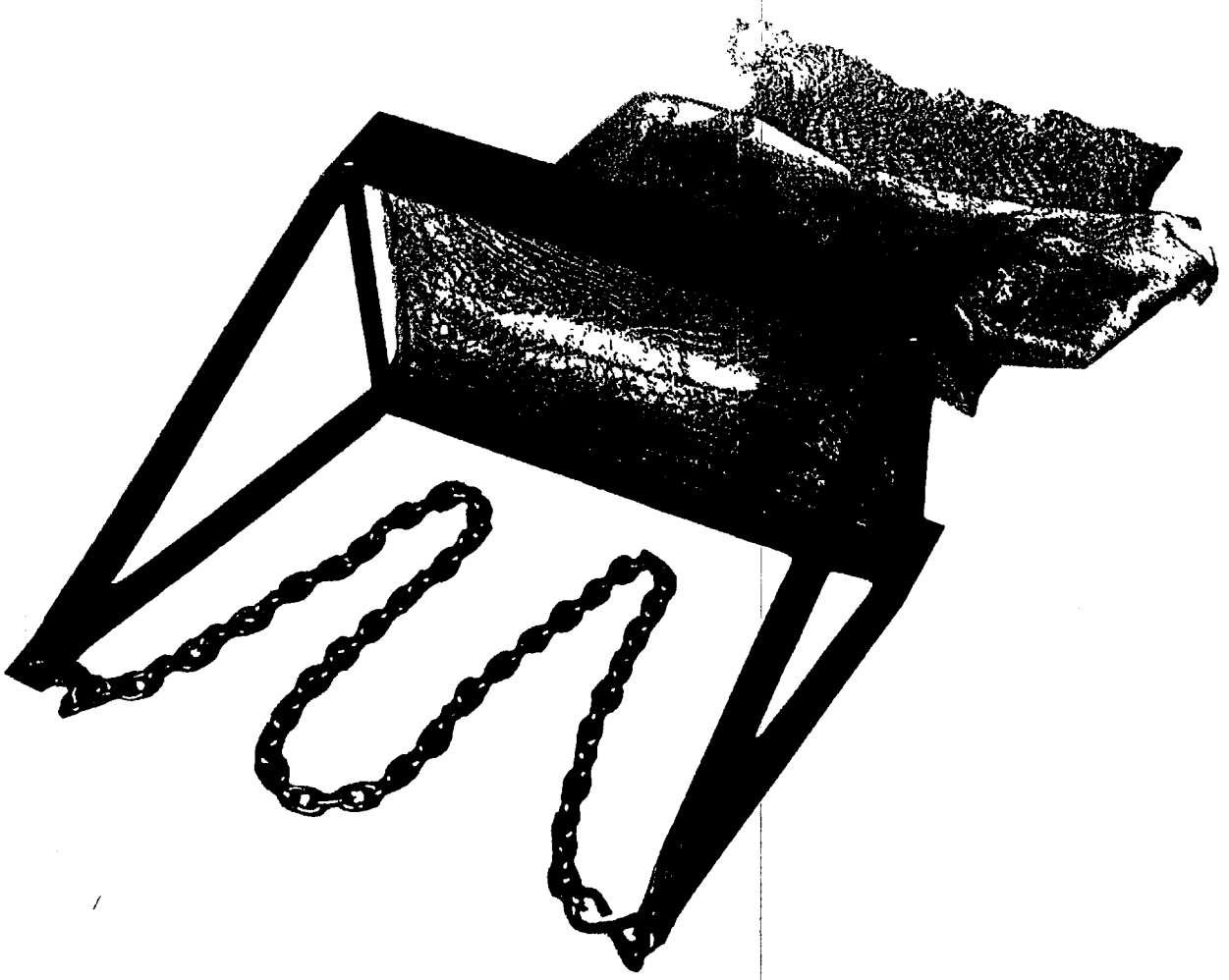

Figure 21.—Biological dredge. (Photograph courtesy of Wildlife Supply Co., Saginaw, Mich.)

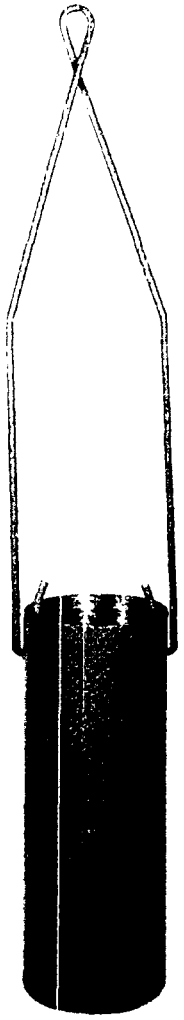

Figure 22.—Pipe dredge. (Photograph courtesy of Wildlife Supply Co., Saginaw, Mich.)

methods and sampling areas should be as uniform as possible throughout a study.

The statistical principles of benthic-invertebrate sampling are discussed by Elliott (1971a). The first requirement is a clear definition of the objectives of the study and the area to be sampled. The frequency of sampling may range from weekly, in detailed studies, to once a year, in general studies. When artificial substrates are used, sufficient time must be allowed for invertebrate colonization. Two sampling procedures using a dip net, one procedure involving collection of individual rocks, and three procedures using artificial substrates are described in the following subsections.

Dip or hand net

A dip, or hand, net is a mesh bag mounted on a metal rim that has an attached handle. It is a simple, effective sampling device for water less than 1 m deep and even may be effective in deeper water for sampling plant beds and other near-surface habitats. The dip net used in a standardized way will provide a numerical assessment of the differences between sampling sites in wadable water. Two general approaches are used, one in which the collector sweeps the net through the major aquatic habitats (Slack and others, 1976; Armitage and others, 1981) and one in which the net is held stationary while the substratum is disturbed with the feet (Hynes, 1961; Morgan and Egglishaw, 1965; Frost and others, 1971; Armitage and others, 1974). The latter method is restricted to streams. The collecting approach used and the effort expended will depend on the size and variability of the sampling area and on the study objectives. Using the moving-net method, the most abundant species may be sampled adequately within 5 or 10 minutes by an experienced biologist. In a river study, Armitage and others (1981) reported that a 3-minute dip-net sample collected about 62 percent of the families and 50 percent of the species that were collected during an 18-minute sample. Slack and others (1976) reported that a 45-minute dip-net sample contained the largest percentage of taxa (78 percent) and the second largest percentage of individuals (41 percent) in a comparison of three collecting methods. Generally, collecting continues for at least 30 minutes in streams as much as 15 m wide and continues for an additional 30 minutes for each 15-m increase in width. Macan (1958) described a method of working slowly upstream, lifting rocks, and holding the net to catch invertebrates swept into it; clinging invertebrates were dislodged from rocks by vigorously swirling the rocks in the mouth of the net. In still water, the net can be scraped rapidly along the bottom to catch easily dislodged invertebrates, or it can be swept through beds of attached or floating plants, probed into piles of brush, or used as a scoop to sample mud, silt, and deposits of leaves or other detritus. The collecting effort and technique must be kept as uniform as possible during a particular study. Empty the dip net frequently to avoid clogging the mesh, which can cause a backwash that would result in loss of sample.

A rapid and versatile method for sampling consists of holding the flat side of a D- or triangular-shaped dip net firmly against the streambed, facing upstream and disturbing the stream bottom for a definite distance (about 0.5 m) just upstream from the net by vigorously kicking three or four times into the bed in an upstream direction (Hynes, 1961; Morgan and Egglishaw, 1965). A proportion of the dislodged invertebrates and detritus will be carried into the net by the current; the kicks should be separated by several seconds to enable this to occur. The method can be used for a variety of substrates from sand to rocks that have a diameter of 45 to 60 cm in weedbeds, or on bedrock using the boot as a scraper. The method has been evaluated by Frost and others (1971) and Armitage and others (1974). The minimum procedure, modified from Morgan and Egglishaw (1965), is to take three (four-kick) samples in a reach of stream: one in

a riffle, one in a pool, and one in a position where conditions are intermediate between the other two sites. The minimum-procedure sites should not be near the banks and should be representative of the habitat; that is, select eroding areas in riffles and depositing areas in pools. Sampling may be increased or modified depending on the physical characteristics of the habitat and the study objectives, but it is important that the technique and net design be uniform throughout a study. Empty the dip net, after each series of kickings, into a shallow tray or bucket, if the collection is to be sorted onsite, or into a wide-mouth container for transporting to the laboratory. Label and preserve each collection.

Individual rocks

Because many benthic invertebrates from shallow streams or rocky shores of lakes live on or beneath rocks, a sampling method that involves lifting individual rocks and collecting the associated invertebrates was developed (Macan, 1958; Schwoerbel, 1970). The method consists of three procedures: selection of rocks, collection of rocks, and reporting of results. Because the number of benthic invertebrates per unit of rock area may vary with rock size (Lium, 1974), rocks of similar size should be collected for samples that are to be compared. In gravel-bed streams studied by Lium (1974), greatest invertebrate densities occurred on rocks between 45- and 90-mm mean diameter. As with other methods, the study objectives are decisive in selection of the sampling method and its application. Depending on the objectives, sampling may comprise 10, 20, or more individual rocks from a single habitat (for example, riffles) or from each of several habitats (for example, pools and riffles). Statistical techniques may be used to ensure random collection of rocks from each habitat.

The simplest collection procedure is to pick a rock at random, lift it gently off the substratum, quickly enclose the rock in a net of appropriate mesh size, and lift the net, rock, and associated invertebrates out of the water. This procedure is repeated until the desired number of rocks has been collected. A better method for rock collection is using the Lium sampler (fig. 23), which was designed to catch invertebrates that wash off a rock as it is lifted from the streambed. With the sampler opening facing upstream, approach the selected rock from the downstream side. Place the hood of the sampler over the rock, and press down to compress the flexible base against the streambed. The flexible base minimizes losses from around the edges of the sampler, and the hood minimizes outwash of invertebrates during rock removal. Invertebrates that are dislodged as the rock is lifted are carried by the current into the screen. Remove invertebrates trapped on the screen by inverting the sampler and washing them into a bucket. During each method of rock collection, scrub each rock thoroughly in a bucket of water using a soft-bristle brush to remove clinging invertebrates. Pour the contents of the bucket through a U.S. Standard No. 70 sieve. Empty the sieve into a shallow, white tray, if the sample is to be sorted onsite, or into a wide-mouth container for transporting to the laboratory. Label and preserve each collection.

If the results are to be reported as areal units, rock sizes must be determined. To report the population in terms of the projected area of rock, measure and record the two longest straight-line dimensions of each rock (A and B axes), in millimeters. To report the population in terms of total rock surface, measure each rock, in millimeters, across the B or intermediate axis (Leopold, 1970; Lium, 1974). The B axis, or breadth, is distinguished from the major axis (A, or length) and the minor axis (C, or width).

Artificial substrates

An artificial substrate is defined by Cairns (1982) "***as a device placed in an aquatic ecosystem to study colonization by indigenous organisms. Although the device may be unnatural in composition, location, or both, most of the biological processes that occur on it appear to be quite similar to those occurring on natural substrates." Many types of standardized, reproducible surfaces are used as collection devices for colonization by benthic invertebrates (Beak and others, 1973; Hellawell, 1978; Cairns, 1982). The uniform shape and texture of artificial substrates greatly simplifies sampling when correctly used. Standardized sampling is especially desirable when the results from different investigators or from different environments are to be compared.

Artificial substrates have been used to investigate various problems in benthic population and community ecology, including organism-substrate relations, community structure and distribution, and island colonization. Artificial substrates also have been widely used in marine fouling studies and for sampling benthic invertebrates in stream-quality programs. Generally, the objectives are: (1) To determine the

Figure 23.—Lium sampler.

composition of the resident benthic community, (2) to collect representative and reproducible samples of benthic invertebrates for areal or temporal comparisons, or (3) to determine rates of species or biomass accrual.

Selection of an artificial substrate sampler and its method of exposure are determined by study objectives and the nature of the environment. Rosenberg and Resh (1982) distinguish between representative artificial substrates (RAS) and standardized artificial substrates (SAS). RAS are samplers that closely resemble the natural substrate over, on, or within which they are placed, such as a basket filled with rocks similar in size distribution to the natural stream bottom. SAS are samplers that differ from the natural substrate of the habitat in which they are placed, such as a multiple-plate sampler. If the objective is to relate the quality of flowing water to the composition of the benthic community, off-bottom exposure may be preferred. Suspension of the samplers within the water column eliminates the effects of bottom conditions that can mask the effects of water composition that serves as a control on benthic community structure (Mason and others, 1973). If the objective is to sample the resident fauna or to evaluate the effects of sediment properties on invertebrate communities, bottom exposure is necessary (Voshell and Simmons, 1977). Before deciding on an artificial-substrate method, onsite tests should be made to compare the relative effectiveness of different samplers and exposures in the habitat to be studied.

Colonization of artificial substrates, reported as biomass or numbers of individuals or species, normally increases rapidly at first then reaches a relatively stable or fluctuating equilibrium level (Rosenberg and Resh, 1982). Colonization rate and biomass vary seasonally, such as being slower in winter than in summer. For monitoring purposes, samplers should be retrieved during the equilibrium phase. The time required to reach equilibrium in 20 studies summarized by Rosenberg and Resh (1982) ranged from 3 to 49 days, but for most studies did not exceed 30 days. Until the colonization process is better understood, preliminary onsite tests should be made to determine optimum exposures for each study.

It is important to prevent losses of invertebrates during sampler retrieval. Many invertebrates leave artificial substrates as soon as they are disturbed. Rabini and Gibbs (1978) reported large losses of invertebrates from barbecue-basket samplers during removal by divers, and McDaniel (1974) reported some loss of invertebrates when retrieving multiple-plate samplers from deep water. Voshell and Simmons (1977) maintained that loss of invertebrates during sample collection and sampler retrieval was a factor contributing to variability among bottom samples in a reservoir. When retrieving a sampler from shallow water, approach from downstream and enclose the entire sampler in a net of appropriate mesh size to catch invertebrates that would be lost when the sampler is lifted from the water. Artificial substrates exposed in deep water should be designed to retain invertebrates that drop off the sampler during retrieval. When retrieved, empty or disassemble the sampler into a tub partially filled with water. Scrub all parts using a soft-bristle brush to remove clinging invertebrates. Pour the contents of the tub through a sieve of appropriate mesh size and add the invertebrates detached from the sampler during recovery. The sampler also may be placed into a container of preservative and transported to the laboratory for cleaning. Cleaned samplers may be reused unless there is reason to believe that contamination by toxicants or oils has occurred (Weber, 1973). Do not reuse rocks or hardboard plates that have been exposed to preservative.

Multiple-plate sampler

This sampler is a jumbo modification (Fullner, 1971) (fig. 24) and is the smallest and most adaptable of the artificial-substrate devices. These samplers are relatively inconspicuous by virtue of size and color, and the modest cost enables replication to further enhance the chances of recovery in small bodies of water where the samplers might be subject to vandalism. Attach multiple-plate samplers to floats, structures, weights, or rods driven into the streambed or lakebed. Install three samplers so they will remain submerged, and leave them to be colonized for the experimentally determined exposure period or for 4 to 5 weeks. Record the exposure time, which should be consistent among sites during a study.

The samplers may be installed in pools or riffles and on the bottom or suspended above it, but the macrohabitat should

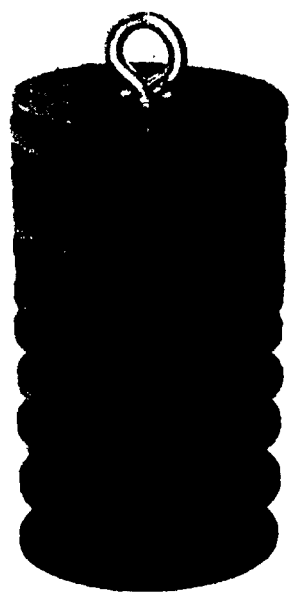

Figure 24.—Jumbo multiple-plate artificial-substrate sampler. (Photograph courtesy of Wildlife Supply Co., Saginaw, Mich.)

be as uniform as possible at all sites during a study. Usually samplers are installed on the bottom in riffles as much as 1 m deep. Make the collections as representative of the reach as possible by ensuring that the samplers are in eroding areas that are not close to the bank. In streams as much as a few meters in width, install the devices about midstream; in wider streams, install the devices about one-quarter of the total width from the nearest bank. In larger rivers or in lakes, the samplers usually are suspended from floats (fig. 25). When a float is used to suspend more than one sampler and the samples are to be kept separate, enclose each sampler in a retrieval net (fig. 26) to avoid loss of invertebrates when retrieving. It is necessary to reach into the water and gently pull a retrieval net over each sampler, securing the net by tightening the drawstring just above the top of the eyebolt that holds the sampler to the float rod. Enclose all multiple-plate samplers on the float before proceeding with substrate removal. When all the nets are in place, detach the samplers from the float. If only one sampler is used or if the results of multiple samplers are to be pooled, a dip net of appropriate size and mesh may be used to enclose the sampler(s) during recovery.

Barbecue-basket sampler

This sampler (fig. 27) is adapted for use in lakes and large rivers. Fill the basket with 30 rocks, 5 to 7.5 cm in diameter, and secure the sampler door using wire or small cable clamps. The rocks used to fill a series of samplers should be of the same general size, shape, and composition and should be cleaned by scrubbing with a brush before use.

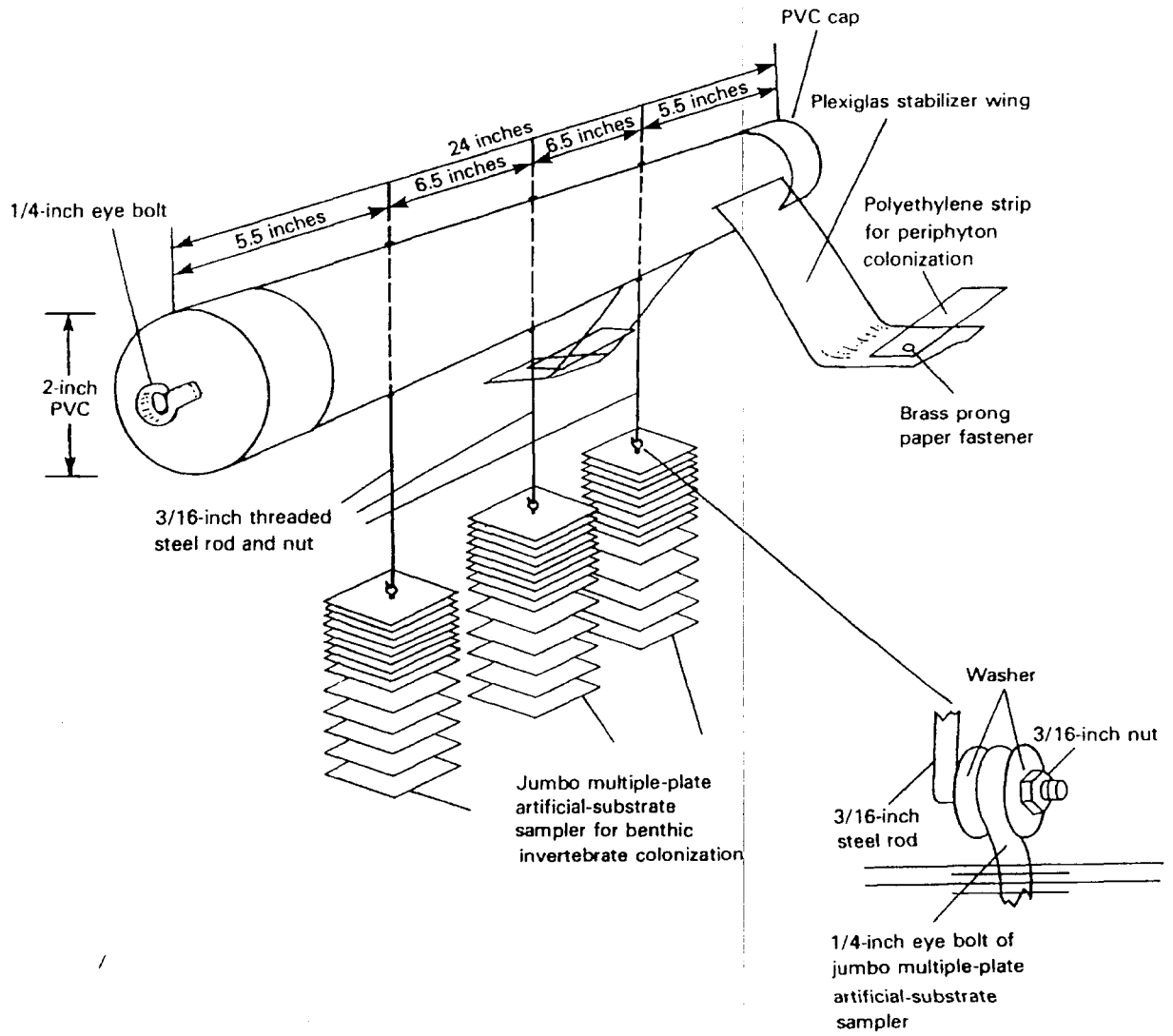

Figure 25.—Float for artificial substrates.

Angular limestone commonly is used in barbecue-basket samplers, although spheres of porcelain or concrete provide a more uniform substrate (Jacobi, 1971). Coniferous tree bark has been used as a lightweight substitute for rocks (Bergersen and Galat, 1975; Newlon and Rabe, 1977).

If possible, suspend three samplers at a depth of 0.3 m below the surface for the experimentally determined exposure period or for 4 to 5 weeks. In environments of variable depth, suspend the samplers from a float. Barbecue-basket samplers also may be installed on the bottom in shallow or deep water, but the macrohabitat, depth, and exposure period must be uniform throughout a given study. Samplers must be protected from loss of invertebrates during retrieval. Samplers exposed in deep water may be enclosed in a retrieval net and brought to the surface by divers, or a net can be mounted on a rectangular frame so the net collapses on the natural substrate during colonization, but lifts to enclose the basket during retrieval.

Collapsible-basket sampler

This sampler (fig. 28) is used if the objective is to compare sampler catches with the population of a surrounding rocky substrate. The basket can be loaded with materials simulating the natural bed on which it lies. This sampler is useful for lakes, shallow streams, or for deep, swift rivers. The sampler consists of a collapsible basket holding gravel or rocks and is surrounded by a nylon netting bag of appropriate mesh. A rim around the top helps retain the gravel. When lowered to the bottom, the basket collapses to form an area of gravel that is subsequently colonized. When raised

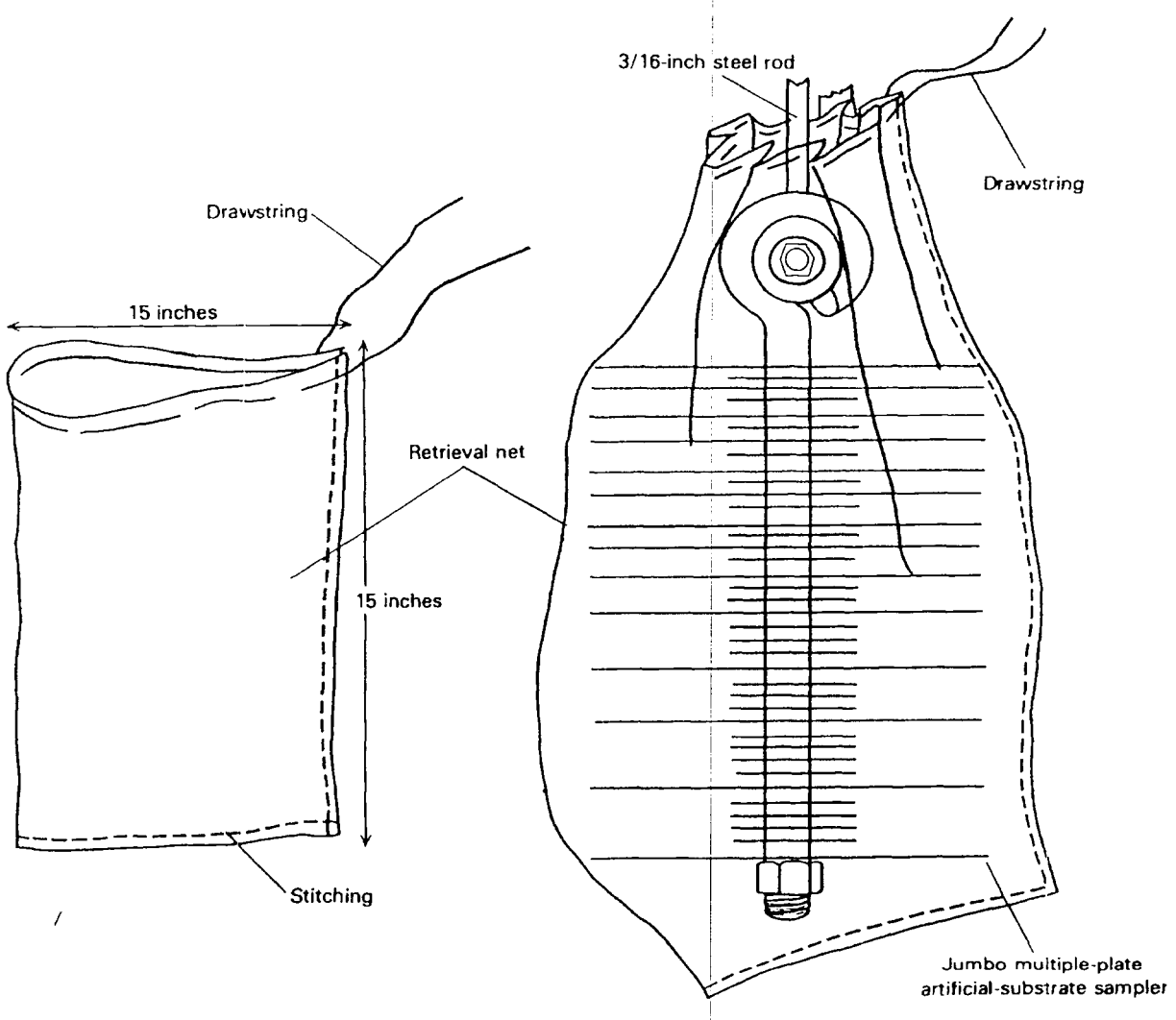

Figure 26.—Retrieval net.

off the bottom, the basket extends to its original hemispherical shape, and the surrounding net bag prevents loss of invertebrates during retrieval.

Expose the samplers in uniform macrohabitats at all sites during a study. If possible, install three samplers in a riffle in shallow streams. Make the collections as representative of the reach as possible by ensuring that the samplers are not close to the bank. In streams as much as a few meters in width, install the devices about midstream; in larger streams, install the devices about one-quarter of the total width from the nearest bank. Currents occasionally hinder the collapse of the sampler, but this can be overcome by connecting a strong rubberband to one side of the basket rim, extending it under the bottom of the wire basket, and attaching it to the other side of the rim (Bull, 1968). The samplers are stable on the bottom at velocities as much as 0.9 m/s, but recovery often is easier if a line or light chain connects the sampler to an inconspicuous anchorage. At velocities greater than 0.9 m/s, the samplers should be anchored.

Distribution and abundance

Absolute quantitative surveys are used to determine the numbers or biomass per unit area of streambed or lakebed and indicate changes in space and time. This type of sampling requires the greatest effort and, in many environments, the objectives cannot be achieved. Because all methods are somewhat selective, comparisons of the benthic invertebrates between sites or sampling dates should be based on uniform sampling methods.

The statistical principles of benthic-invertebrate sampling are discussed by Elliott (1971a). The first requirement is a clear definition of the objectives of the study and the area to be sampled.

When a knowledge of numbers or biomass per unit area is required, the major considerations are: (1) The size of the sampling units, (2) the number of sampling units in each sample, and (3) the location of sampling units in the sampling area. In general, the smaller the sampling units used, the more accurate and representative will be the results. Practical factors, such as particle size, will set a lower limit to the sampling-unit dimensions. Large numbers of sampling units in the total sample (greater than 50) are preferable, but usually impractical because of the labor involved in collection and analysis. The size of small samples can be calculated with a specified degree of precision (Elliott, 1971a, p. 128-131). The sampling units usually are randomly located in the sampling area, and all the available sites in the area must have an equal chance for selection. Stratified random sampling is preferable to simple random sampling.

A complete and accurate estimate of the numbers of all species in a large area of bottom often is impossible. Therefore, "***most quantitative investigations are restricted to a study of a small number of species in a large area, or a larger number of species in a small area***" (Elliott, 1971a, p. 127). This means that if the study objective is to compare the number and abundance of species at several sites or on

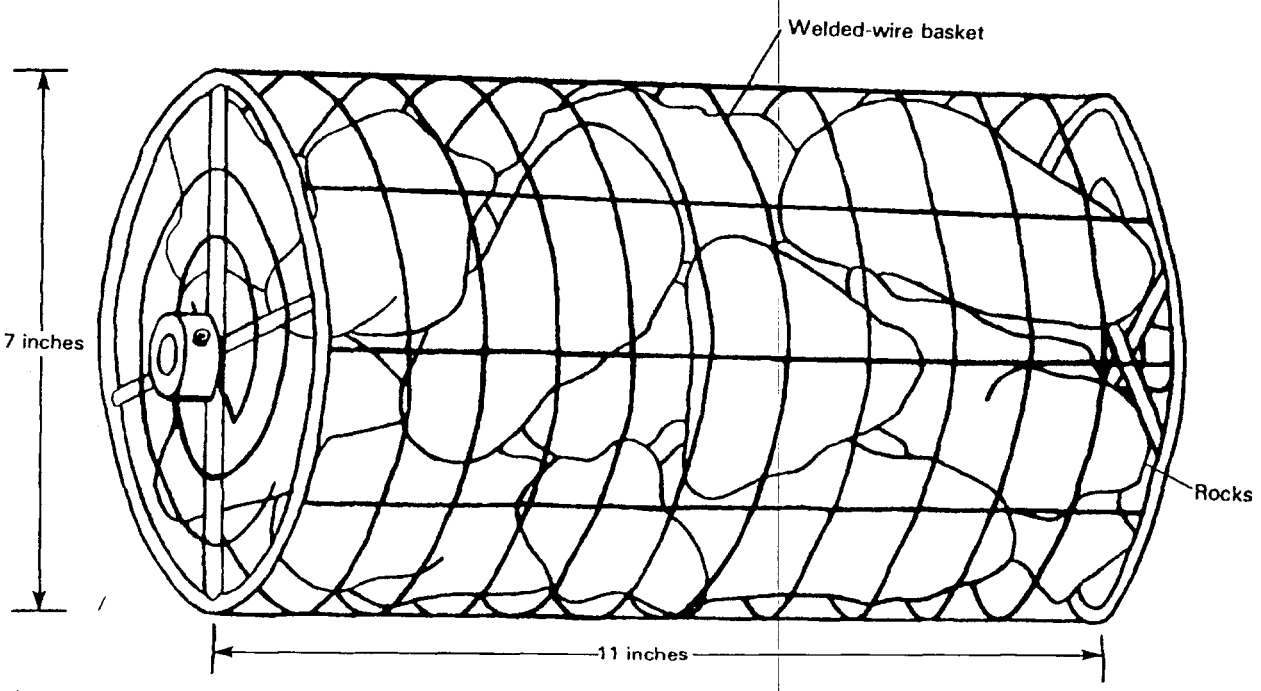

Figure 27.—Barbecue-basket artificial-substrate sampler.

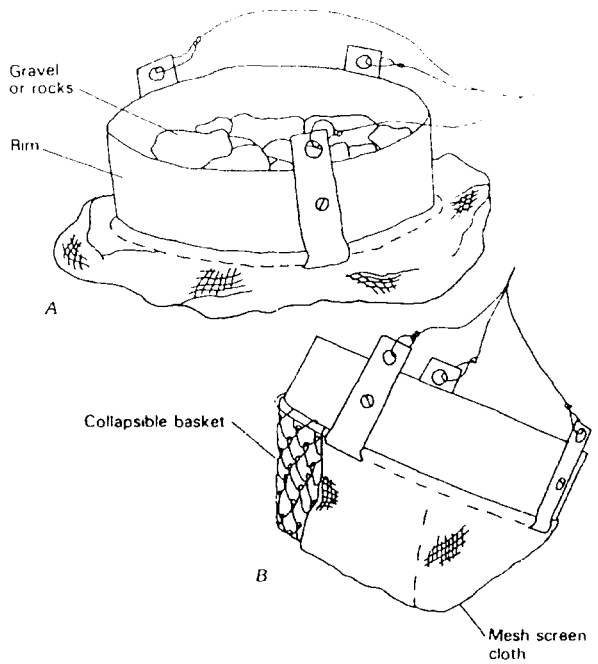

Figure 28.—Collapsible-basket artificial-substrate sampler: (*A*) Resting on streambed. (*B*) Being retrieved. (Redrawn from Bull, 1968.)

different sampling dates, numbers or biomass per unit area may be needed only for a particular type of homogeneous substrate. However, the area of the substrate sampled must be clearly defined.

The literature about the quantitative study of benthic invertebrates in flowing water was reviewed by Hynes (1970) who concluded that quantitative data about the benthic invertebrates are extremely difficult to obtain and are, at best, very rough estimates. Nevertheless, if three or more samples are collected, a general idea of the abundance of the more common species can be obtained. Sampling in a long transect line, which parallels some obvious environmental gradient, such as from shallow to deep water, provides a greater probability that most species will be collected at least once (Elliott, 1971a, p. 127).

Sampling frequency must be based on study objectives. Waters (1969a) and Cummins (1975) emphasized that sampling for the estimation of benthic invertebrate production should be done during the period of maximum change in growth and survivorship. For populations having typical survivorship and maximum mortality during the early instars and having approximately exponential growth curves, initial sampling should be at short intervals and later sampling at decreased frequency. For a complete faunal study, short-interval sampling, weekly, or less, should be done during periods when most of the species are in early age classes. In the temperate zone, this period generally is late spring and late fall (Cummins, 1975).

Quantitative studies require the collection from the sampling unit of all benthic invertebrates within the selected size range. The area of the sampling unit is defined by the area of the sampling device, but the depth to which sampling should extend into the sediments remains a problem. The vertical distribution of invertebrates in soft sediments (Lenz, 1931; Cole, 1953; Ford, 1962; Brinkhurst and others, 1969) and in coarse sediment (Coleman and Hynes, 1970; Mundie, 1971; Bishop, 1973) has been studied. As a guide to the depth of sampling, Cummins (1975) proposed measuring the oxygen profile in the sediment to determine the depth of the oxygenated zone (Ericksen, 1963) or sampling at least to a depth at which the sediment seems anaerobic; 0.01 to 0.1 m in fine, homogeneous sediment and 0.1 to 0.3 m in coarse, heterogeneous sediment.

Brinkhurst (1967) listed the following theoretical specifications for a quantitative sampler:

1. Depth of penetration. Invertebrates are found deep in the sediment, and a true measurement of total standing crop or proportional representation of species requires that the sampler collect sediment from the surface to a depth of at least 20 cm.
2. Bite. The bite of a sampler should be deep enough so all depths are sampled equally in any one attempt. The bite characteristics should enable accurate estimation of the surface area that was sampled.
3. Closing mechanism. Complete closure is required, or some of the sample will be lost. The closing mechanism should be powerful enough to shear through twigs and other obstructions.
4. Internal pressure. The descent of a sampler should not cause a pressure wave that will disturb the topmost sediment or give a directional signal to invertebrates capable of retreating from the sample area.

Although a corer that is completely open during descent satisfies many of the theoretical requirements in still water, no sampler available satisfies all requirements, especially for rocky sediment and flowing water. One problem is that any solid object, such as a corer or box, lowered into a stream deflects the current downward and scours the bottom where the sample is to be collected (Macan, 1958). The devices listed in the following sections are those most commonly used or those that seem to be best suited to the work of the U.S. Geological Survey.

Box, drum, or stream-bottom fauna sampler

The box, drum, or stream-bottom fauna sampler (fig. 29), depending on its design, is used by pushing the bottom edge downward to seal a compressible edge or by rotating a cylinder back and forth into the substratum. In the latter design, teeth dig into the bed, and a flange of metal and foam rubber or plastic also isolates the enclosed area. In flowing water, mesh panels in the sides of the sampler decrease scour as it approaches the bottom. To remove the invertebrates from the sample area, begin by placing the large rocks into a bucket of water. Thoroughly disturb the remaining sediment by digging and stirring as deeply as possible using a

garden trowel or fork, then stir the water vigorously using a small dip net to strain suspended material from the liquid. Some samplers have an attached bag net into which suspended invertebrates are carried by the current. Others require repeated sweeps. Empty the dip net into the bucket and continue the process until no additional invertebrates are collected. More sediment from the enclosed area may need to be removed as digging and stirring proceed. Remove the large rocks from the bucket and discard after scrubbing using a soft-bristle brush. Pour the contents of the bucket through a U.S. Standard No. 70 sieve. Transfer the concentrated sample to a shallow, white tray, if the sample is to be sorted onsite, or into a wide-mouth container for transporting to the laboratory. Label and preserve each collection.

Surber sampler

Press the bottom edge of the Surber sampler (fig. 30), or one of the modified samplers, firmly against the substrate to isolate the enclosed area as completely as possible. These samplers depend on the current to carry invertebrates into an attached net bag. Slack (1955) enclosed the sides and front of a Surber sampler with wire mesh and, in slowly moving water, used a rectangular fabric-covered paddle to produce a flow sufficient to sweep benthic invertebrates into the net. To remove the invertebrates from the area enclosed by the sampler, lift the larger rocks and scrub them into the mouth of the net. Thoroughly disturb the remaining sediment by repeatedly digging and stirring as deeply as possible, allowing the current to sweep the invertebrates and lighter detritus into the bag net. It is important, but difficult in practice, to avoid contamination of the sample by material from outside of the enclosed area. Empty the contents of the bag net into a shallow, white tray, if the sample is to be sorted onsite, or into a wide-mouth container for transporting to the laboratory. Label and preserve each collection.

Ekman grab

The preferred sampler for mud, silt, or fine sand is the Ekman grab (fig. 31). In shallow water, the sampler is operated manually, usually mounted on a pole. The Ekman grab can be used in this way to sample fairly hard sediment because the operator can force the sampler shut by exerting additional pressure on the upper edge of each jaw. In deep water, the sampler is lowered to the bottom, allowed to settle into the sediment, and then closed by dropping a messenger down the line.

In a tank and onsite comparison of seven grabs, Elliott and Drake (1981a) reported that the pole-operated Ekman grab

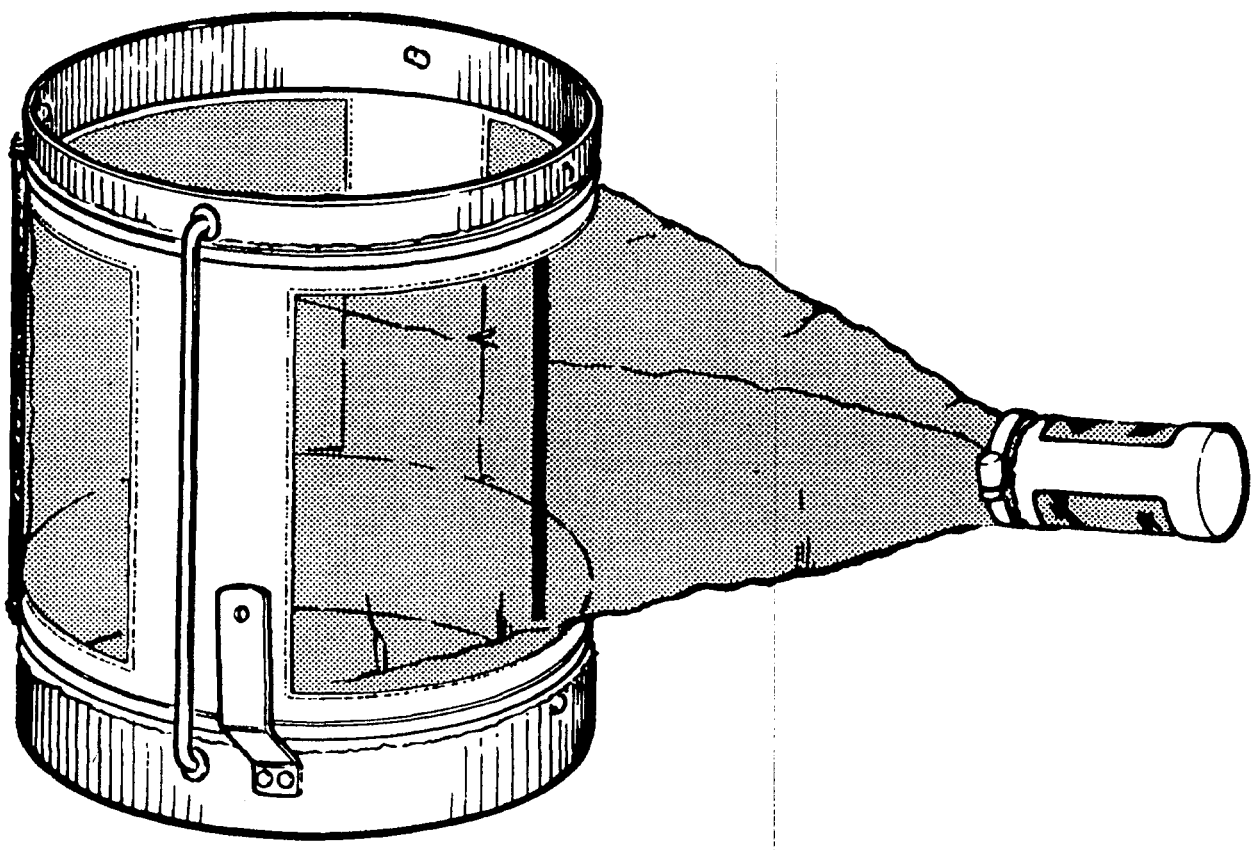

Figure 29.—Box, drum, or stream-bottom fauna sampler. (Sketch courtesy of Kahl Scientific Instrument Corp., El Cajon, Calif.)

performed well on a predominantly muddy bottom (particle size 0.004–0.06 mm) where the mean depth of penetration into the bottom was greater than 5 cm. In fine gravel of modal size (2–4 mm), efficiencies in terms of numbers per square meter were 54 percent, and the depth of penetration was less than 5 cm. The grab did not perform satisfactorily on a predominantly gravel bottom that had some rocks larger than 16 mm.

At the water surface, the sampler jaws are opened and the contents emptied into a tub, a large sieve, or a wide-mouth container for transporting to the laboratory. Label and preserve each collection.

Ponar and Van Veen grabs

Ponar and Van Veen grabs (figs. 32, 33) are heavy samplers that should be operated using a winch. They generally are used for deep-water sampling in gravel, hard sand, and clay, as well as in soft sediment. These instruments close on contact with the bottom; but, to operate effectively, they must bite vertically. This requirement poses little problem in lakes, but in river work, bottom sampling is especially difficult. When used from a drifting boat, the grab sometimes can be lowered nearly to the bottom, then dropped suddenly so it makes contact in an upright position.

In a tank and onsite comparison of seven grabs, Elliott and Drake (1981a) reported that the Ponar performed well on a predominantly muddy bottom (particle size 0.004–0.06 mm) where the mean depth of penetration into the mud was greater than 5 cm. In fine gravel of modal size (2–4 mm), and where the mean depth of penetration was greater than 5 cm, efficiencies in terms of numbers per square meter were 94 percent for the unweighted Ponar and 93 percent for the weighted Ponar. The only grab to operate adequately on a gravel bottom that had some rocks greater than 16 mm was the weighted Ponar.

In a tank and onsite comparison of seven grabs, Elliott and Drake (1981a) reported that the Van Veen grab had an efficiency of 71 percent in terms of numbers per square meter on a fine-gravel bottom (modal size 2–4 mm). The mean depth of penetration was greater than 5 cm. However, the Ekman and Ponar grabs performed better than the Van Veen grab on a predominantly muddy bottom.

Empty the sampler into a tub, and if mud is present, wash it from the sample. Pour the contents of the tub through a U.S. Standard No. 70 sieve. Transfer the concentrated sample to a shallow, white tray, if the sample is to be sorted onsite, or into a wide-mouth container for transporting to the laboratory. Label and preserve each collection.

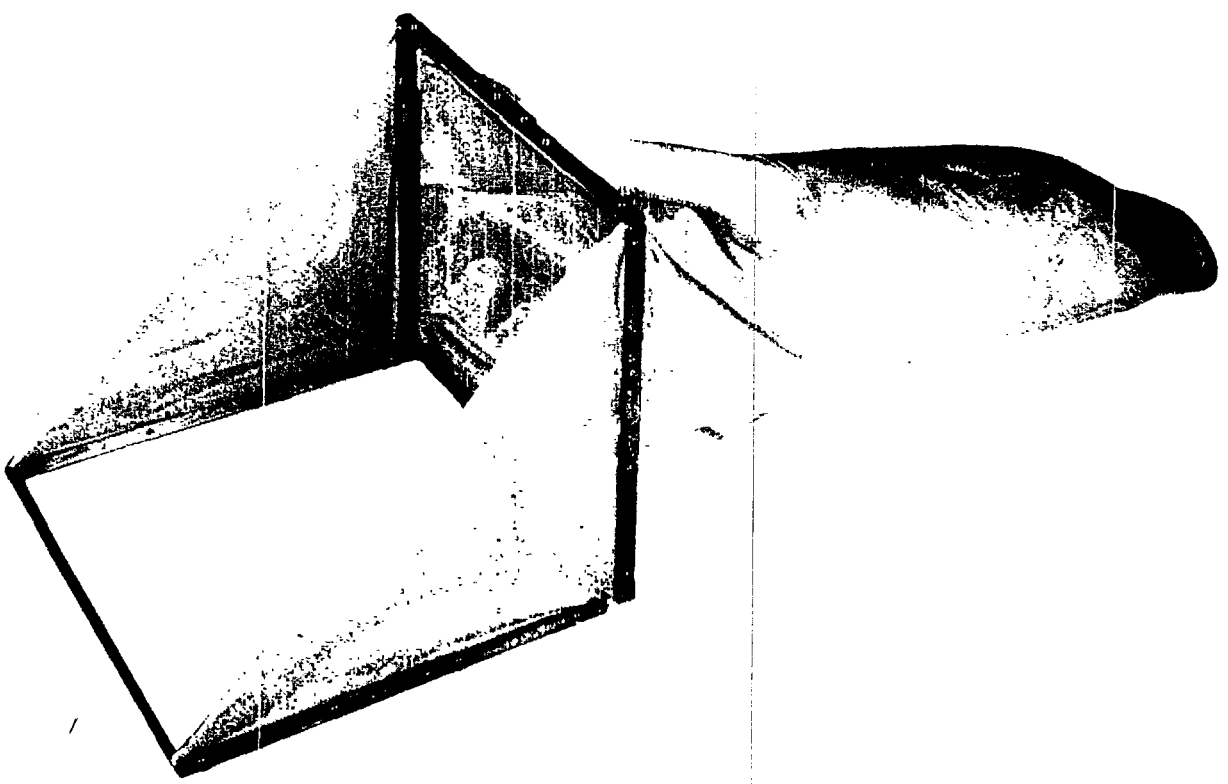

Figure 30.—Surber sampler. (Photograph courtesy of Wildlife Supply Co., Saginaw, Mich.)

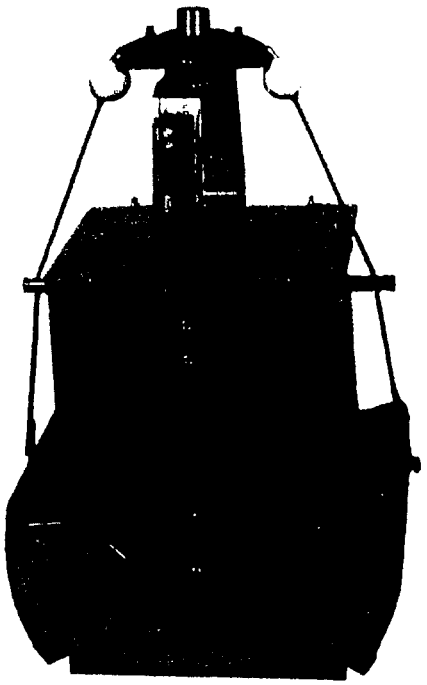

Figure 31.—Ekman grab, tall design. (Photograph courtesy of Wildlife Supply Co., Saginaw, Mich.)

Corers

These devices are used when an undisturbed sample of sediment is required. They are suitable especially for clay, silt, or sand bottom, and are used more widely in lakes than in streams. Hand corers designed for manual operation can be used in shallow water as much as several meters in depth. Deeper water requires devices such as the K.B.-type or Phleger corer (fig. 34), which depend on gravity to drive them into the sediment. All corers have been designed to retain the sample as the instrument is withdrawn from the sediment and returned to the surface. Follow the manufacturer's instructions for operating corers. Depending on the study objectives, sections of the core can be extruded and preserved separately, or the entire core may be retained in the tube. Intact cores are best preserved by freezing, but the sample can be sieved, labeled, and preserved.

Invertebrate drift

Studies have indicated that many kinds of benthic invertebrates become entrained in streamflow and that the resulting downstream drift of invertebrates is a regular feature of running water (Waters, 1969b, 1972; Müller, 1974). Because drifting invertebrates come from a variety of habitats, drift samples contain a relatively large variety of taxa (Waters, 1961; Larimore, 1974; Slack and others, 1976). The rate of invertebrate drift is affected by many factors, including light intensity, time of day, season of the year, stream discharge, and weather. The relation of invertebrate drift to

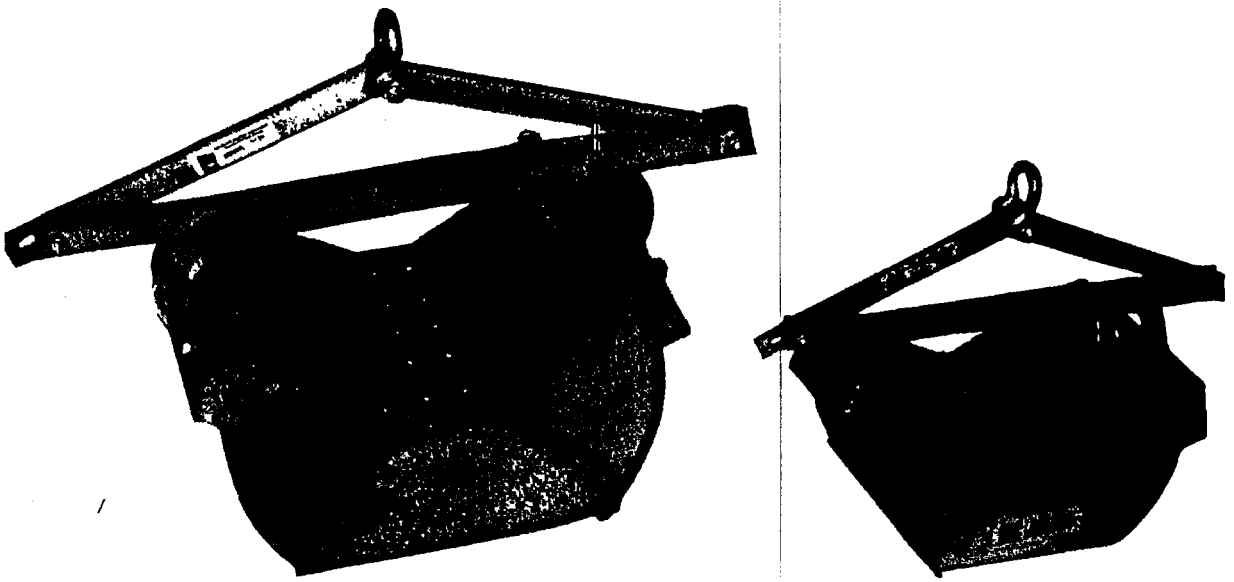

Figure 32.—Ponar grab. (Photograph courtesy of Wildlife Supply Co., Saginaw, Mich.)

water quality has been reported by Coutant (1964), Besch (1966), Wojtalik and Waters (1970), Wilson and Bright (1973), and Larimore (1974). Collections should be made upstream from any artificial disturbance of the streambed or banks. The distance that invertebrates drift varies with different species and with environmental conditions. Estimates of drift distances range from less than 1 m to more than 100 m (Hemsen, 1956; Waters, 1965; McLay, 1970), although McLay (1970) and Elliott (1971b) reported an exponential upstream decrease in the number of benthic invertebrates in the drift. Drift collections for impact assessment should be made; however, the fact that clean-water invertebrate species can be carried into stressed areas where they cannot survive needs to be emphasized.

Methods and equipment for collecting invertebrate drift are described by Elliott (1970). Drift samplers vary from simple nets to elaborate battery-powered devices capable of automatically collecting up to eight timed samples. A simple net of 210±2-μm or other appropriate mesh size on a square or rectangular frame is sufficient for making invertebrate drift collections (fig. 35). In shallow water, anchor the net with the opening upstream by driving steel rods into the streambed. Two types of deep-water exposures are shown in figure 36. Study objectives will determine the location, type, and duration of net exposure. Nets anchored downstream from riffles will catch more invertebrates than those downstream from pools, and the greater the volume of flow through the net, the larger the collection. The vertical position of drift nets in the water column is determined by water depth and study objectives. In water as much as 1 m deep, a mid-depth position commonly is used for a single drift net. Nets may be stacked, one above the other, to sample the entire water column from surface to bottom (Waters, 1969a). If the net opening is in contact with the stream bottom, nondrifting invertebrates may be collected. If the net opening extends above the water surface, the collection will include maximum numbers of floating adults, pupae, exuviae, and terrestrial species. If only aquatic invertebrates and life stages are of interest, the top of the net should be under water. In deep rivers, the net(s) may be near the stream bottom or near the surface, but the technique should be uniform if comparable collections are required. Because drift rates are faster at night than during the day, drift data are needed for at least 24 hours and collection periods commonly are 30 minutes, or 1-, 2-, or 3-hours, although collecting sometimes can last as much as 8 hours using properly designed nets. At the end of the collecting period, empty each net into a separate shallow, white tray, if the collection is to be sorted onsite, or into a wide-mouth container for transporting to the laboratory. Label and preserve each collection. Invertebrate drift can be collected as an adjunct to a faunal survey to determine drift density or to determine drift rate. Collection methods will vary depending on the study objectives.

Figure 33.—Van Veen grab. (Photograph courtesy of Kahl Scientific Instrument Corp., El Cajon, Calif.)

Drift density

The nets, location, and exposure periods described in the preceding section are suitable for determination of invertebrate drift density (the quantity of invertebrates per unit volume of water) when the volume of water passing through the net during the collection period is known. Water volume can be determined from an average of the speed of the current measured in the mouth of the net at the beginning and the end of the collection period, multiplied by the area of the net opening and the length of the exposure period. A digital flowmeter mounted in the net opening can be used to determine the cumulative volume of water passing through the drift net. Drift density usually is assumed to be fairly uniform in the cross section at a given time (Waters, 1972), and results from a single drift net are assumed to be adequate. This can be checked by collecting, using two or more nets exposed simultaneously at different points in the cross section.

Drift rate

The drift-density procedures also are suitable for determination of invertebrate drift rate (the quantity of invertebrates passing a given point per unit of time). Drift rate can be calculated from drift density if stream discharge is known.

When drift density and discharge values are available for a 24-hour period, the total daily drift rate per instantaneous discharge or per total daily discharge can be calculated.

Sample preparation

Samples for which only biomass will be determined need to be frozen, preferably freeze-dried, as soon as possible after collection. Samples for taxonomic determination need to be preserved in alcohol or formaldehyde. (Use of alcohol for preserving samples for biomass determinations will result in small values because of extraction of alcohol-soluble substances from the invertebrates.) To ensure adequate preservation of benthic-invertebrate collections, fill containers no more than one-half full with the sample so a volume of preservative can be added at least equal to the volume of organic material, including detritus. Preserve the invertebrates or the unsorted samples in 70-percent ethyl alcohol, 70-percent isopropyl alcohol, or 4-percent formaldehyde solution. If formaldehyde is used, replace with alcohol prior to identification and enumeration. Containers should be filled to the top to avoid excessive sloshing and damage to delicate specimens. If unsorted samples are to be stored for more than a few weeks, the preservative should be drained after 1 week and replaced with fresh preservative.

Label samples indicating the location, habitat, date and time of collection (local standard time) for drift collections, name of collector, and sample preparation (type of preservative, mesh size of sieves or nets, or other treatment). Soft black pencil may be used onsite, but use a water-proof carbon ink for permanent labels. Place labels inside the sample containers so they are visible from the outside, or place duplicate labels inside and outside the containers. Secure jar lids using tape to prevent loosening and subsequent loss of preservative by evaporation. This is especially important if samples are to be shipped or stored for more than a few weeks.

Sample sorting

A requirement of all benthic-invertebrate methods is to separate the invertebrates from sediment and detritus in the samples. The following general apparatus, reagents, and procedures for sample sorting apply to all methods in this section.

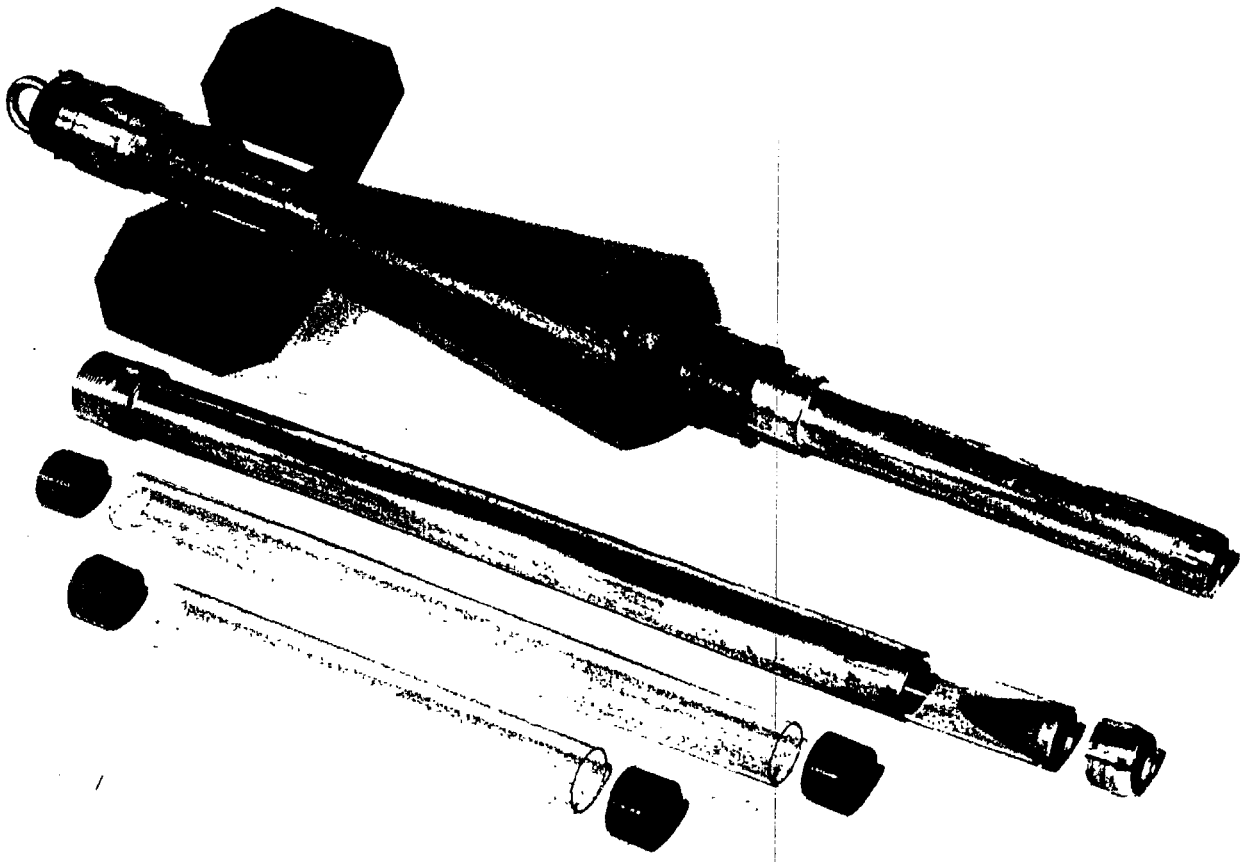

Figure 34.—Phleger corer. (Photograph courtesy of Kahl Scientific Instrument Corp., El Cajon, Calif.)

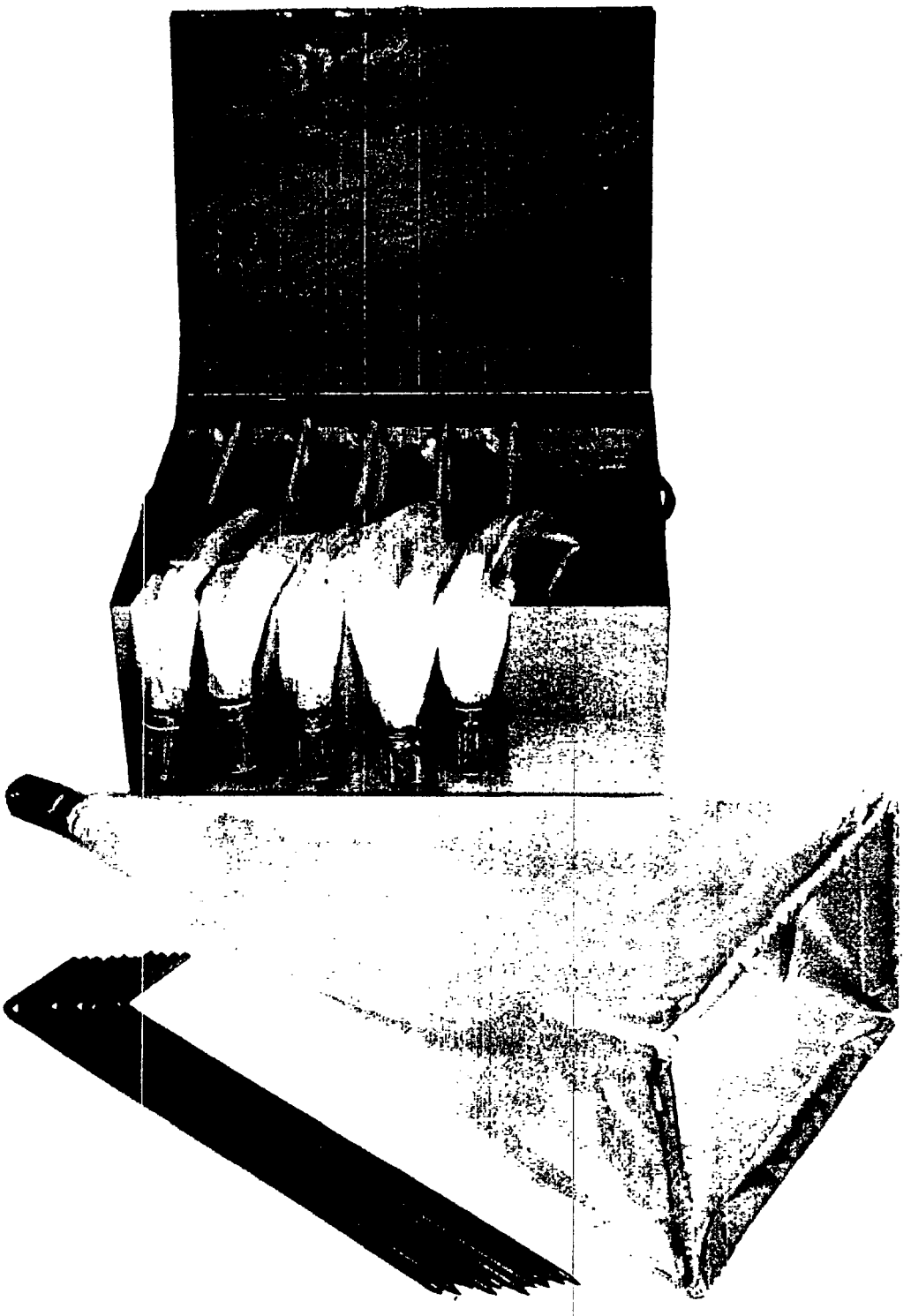

Figure 35.—Stream drift nets. (Photograph courtesy of Wildlife Supply Co., Saginaw, Mich.)

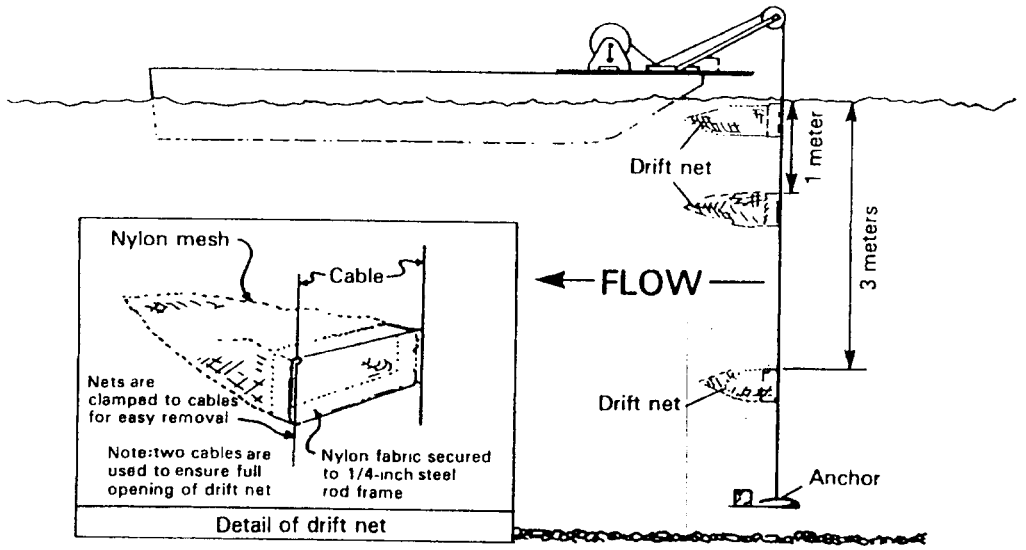

A

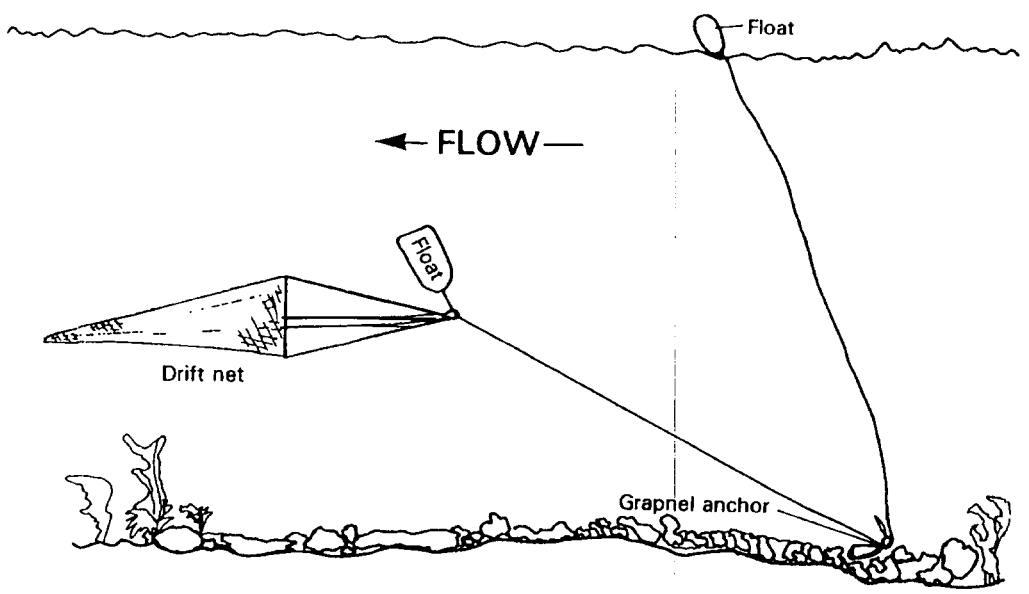

B

Figure 36.—Methods of exposing drift nets in deep rivers: (*A*) From an anchored boat (from Ferreira and Hoffman, 1978). (*B*) Float-supported net (from J.L. Barker, U.S. Geological Survey, written commun., 1982).

Apparatus

A.1 *Dishes*, glass, petri, or Syracuse watchglasses.

A.2 *Forceps* that have fine or rounded points. Forceps that have fine points are useful for handling small invertebrates. Forceps that have rounded points are less likely to tear netting or puncture the mesh of sieves or other sampling equipment.

A.3 *Hydrometer*, plain form, range 1.000 to 1.220.

A.4 *Ink, waterproof.*

USGS
science for a changing world

Techniques of Water-Resources Investigations
of the United States Geological Survey

Chapter A4

METHODS FOR COLLECTION AND ANALYSIS OF AQUATIC BIOLOGICAL AND MICROBIOLOGICAL SAMPLES

L.J. Britton and P.E. Greeson, Editors

This report supersedes TWRI 5A4, published in 1977, entitled "Methods for collection and analysis of aquatic biological and microbiological samples," edited by P.E. Greeson and others.

Revised 1987
Book 5
LABORATORY ANALYSIS

AQUATIC VERTEBRATES

Introduction

In most aquatic ecosystems, fish are the most common vertebrates. Because they are dependent on lesser life forms for food, the health of a local fish population commonly is used as an index for water quality and for the health of other aquatic organisms. Fish, however, are mobile animals and may avoid undesirable water quality (Whitmore and others, 1960). Moreover, they may exist for relatively long periods of time without food.

Although the investigation of fish populations is not a major interest of the U.S. Geological Survey, such investigations may at times provide valuable information about the aquatic environment. For example, length-weight relations can be used to compare fish from several streams, and changes in species composition with time may reveal water-quality trends, such as increased enrichment or a temperature increase of a particular aquatic environment. Stomach analyses reveal the organisms on which the fish feed; this information is essential to understanding the aquatic ecosystem.

The presence of dead or dying fish is indicative of lethal environmental conditions, unless it is a postspawning mortality or a delayed mortality resulting from cellular buildup of toxic materials. Onsite personnel can acquire valuable information by observing and collecting distressed fish. Pathological and histological examination of such fish may disclose the cause of death; however, on-the-spot observations of existing conditions, such as color of the water, floating material, effluent discharge, and the immediate collection of a water sample, are vital for a true explanation of the mortality (American Public Health Association and others, 1985).

In all States, some fish species and other aquatic vertebrates are protected by law, and the collection of others is regulated. Onsite personnel should ensure that they have complied with State laws before collecting samples of fish and other aquatic vertebrates. Hocutt (1978, p. 88) has prepared a listing, by specific year, for those States that require a permit or a license, or both, to collect fish. Czajka and Nickerson (1977) have prepared a similar list for the collection of reptiles and amphibians.

Although the methods described in this section are applicable to fish and other aquatic vertebrates, the emphasis generally will be on fish.

Collection

Collecting specimens for study requires a knowledge of the selectivity, limitations, and efficiency of the different types of sampling gear. Sampling gear and its use are discussed in Lagler (1956), Ramsey (1968), Weber (1973), Everhart and others (1975), Hocutt (1978), and American Public Health Association and others (1985).

Because of the nonrandom distribution of fish populations, the choice of sampling method, time of sampling, and frequency will depend on the objective of the particular investigation.

Active sampling gear

Active sampling gear, such as seines, trawls, electrofishing, chemical fishing, and hook and line, generally are less selective and commonly are preferred to passive techniques, such as gill, trap, hoop, and fyke nets.

If the data are to be used statistically (quantitatively), the method(s) of collection must be comparable numerically. Many fishery studies, for example, are concerned with determining yield biomass per unit area or estimating population densities in number per unit area based on a sample of the total population.

Ichthyocides (fish toxicants) provide the best method for collecting quantitative data; however, electrofishing often is the method of choice where chemicals cannot be used. While seines and other types of nets are basically qualitative gear, quantification of data is possible when the same experienced personnel do the collecting and all other factors are equal.

Seines

Seines consist of a length of strong netting material attached to a float line at the top and a heavily weighted lead line at the bottom. The ends of the seine are attached to a short stout pole or brail. If the net is large, hauling lines are attached to the top and bottom of the brail by a short bridle (fig. 50).

The sides, or wings, of the seine generally are of larger mesh than the middle, or bunt, part. The bunt may be in the form of a bag to confine the fish. Bag seines are most useful in ponds and lakes, and straight seines usually are used in streams and rivers. Small seines (50 ft or less) are adequate for capturing small fish. For capturing larger fish, especially in clear water, seines of 100 ft or more are necessary.

Bag seine

The bag seine is most useful in small ponds or lakes but may be used in slow-flowing rivers. Select a shoreline section that is free of stumps and other obstructions. Secure or hold one end of the seine to the bank, and extend the seine into the water at right angles. Pull the extended end of the seine toward the bank so the seine forms the radius of a circle (Lagler, 1956, p. 8, fig. 2). With both ends of the seine

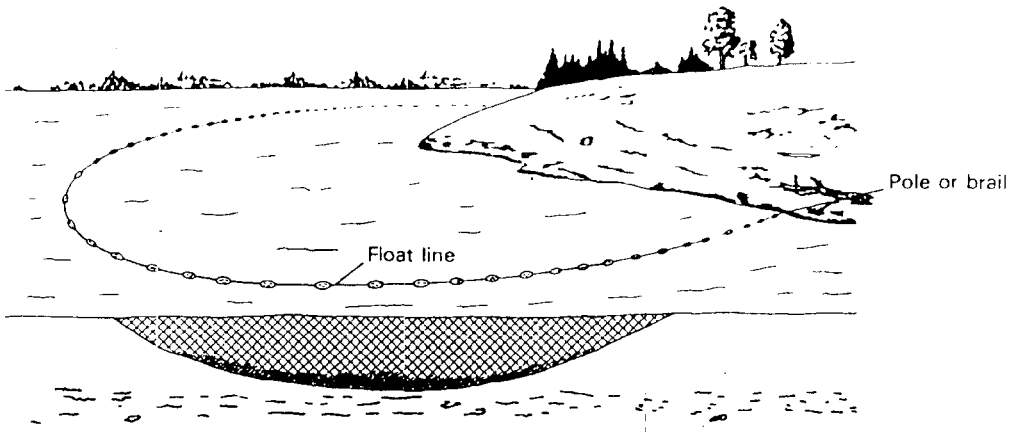

Figure 50.—Common haul seine (modified from Dumont and Sundstrom, 1961).

beached, pull the remainder of the seine slowly into shore, keeping the lead line in contact with the bottom. Continue pulling until the opening of the bag reaches the shoreline. Remove the specimens, and process using the method selected based on the objectives of the study.

Straight seine

Select a suitable area, usually a stream section having a smooth or relatively smooth bottom. Beginning at the downstream boundary of the area, pull the seine upstream into the current as rapidly as possible. Ensure that the bottom edge of the seine (lead line) is in contact with the stream bottom at all times. At the upstream boundary of the area, beach or bring the seine to the bank and quickly lift it from the water, forming a pocket in its center.

When using the larger seines in rivers and lakes, the usual method is to leave one end of the net, or hauling line, on shore while the net is played out by hand or boat perpendicular to the shore until the net is nearly extended. Direction then is changed (usually downstream) to lay out the remaining net parallel to the shore. When the net is fully extended, the end of the second haul line, or brail, is brought to the shore.

When fishing for pelagic or schooling species, one end of the net may be hauled first to form a hook against the shore. As soon as a school of fish enter the area, the second line is hauled. When fishing for nonschooling species, both ends of the net usually are hauled in at once.

With either type of net, be certain the lead line remains in contact with the bottom at all times. Continue pulling until the pocket, or bag, reaches the shoreline. Remove specimen(s) and process using the method selected based on the objective of the study.

Trawls

Trawls are specialized seines used in large, open-water areas where they are towed behind boats at sufficient speeds to overtake and enclose fish on the bottom or to collect schooling fish at various depths (figs. 51, 52). Because of the size and weight of the equipment, trawls have limited usefulness in lakes and reservoirs. For more information, refer to Massman and others (1952), Rounsefell and Everhart (1953), and Dumont and Sundstrom (1961).

Electrofishing

Applying alternating or direct electrical current [at the specified (110 V ac or 220 V dc) output amperage] to water to induce subnarcosis or the temporary immobilization of fish is an efficient method of capturing fish. A pulsed direct current of 50 to 100 pulses per second, at the specified output amperage, includes electrotaxis of the fish and attracts it to the positive electrode, or anode, where it is netted (Sharpe and Burkhard, 1969). Alternating current is most useful in streams of very weak resistance.

Electrofishing can be hazardous and must be used with caution. All personnel engaged in electrofishing must wear protective rubber waders and low-voltage Trapper's gloves, and adhere strictly to safety precautions. Training of all crew members in first-aid for electrical shock and drowning is advisable. The method is best suited for small streams but is adaptable to lakes and slow-flowing rivers as described by Frankenberger (1960) and Sharpe (1964).

After selecting a suitable site, position the electrodes according to the manufacturer's instructions for the type of water being sampled. Electrofishing generally is done upstream from a natural barrier or block seine placed across the stream. Shock all areas that may have fish, such as brush, fallen trees, boulders, and undercut banks. When making population estimates, shock the same reach three or more times (Zippin, 1956). Capture efficiency varies with the species of fish, current velocity, turbidity, water conductivity, experience of personnel, and other variables (Cross and Stott, 1975). Friedman (1974) prepared a selected bibliography about the use of electrofishing that included the state of the art during 1974.

Captured fish should be placed in live cages for processing. When possible, identify specimens onsite and release

after processing. If onsite identification is not possible or only tentative, count the number of individuals in each taxa, and preserve about 20 representative specimens for laboratory examination. Processing of specimens will depend on study objectives but generally includes length, weight, sex, and scale samples for age-growth analysis. Lagler (1956) and Everhart and others (1975) are excellent sources for additional information about fishery science.

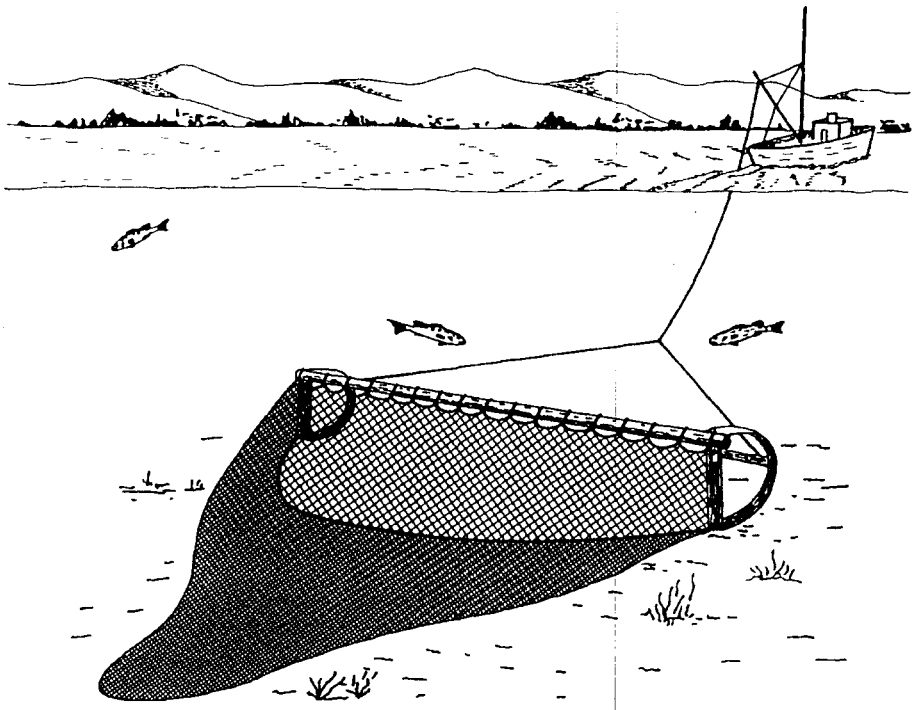

Figure 51.—Beam trawl (modified from Dumont and Sundstrom, 1961).

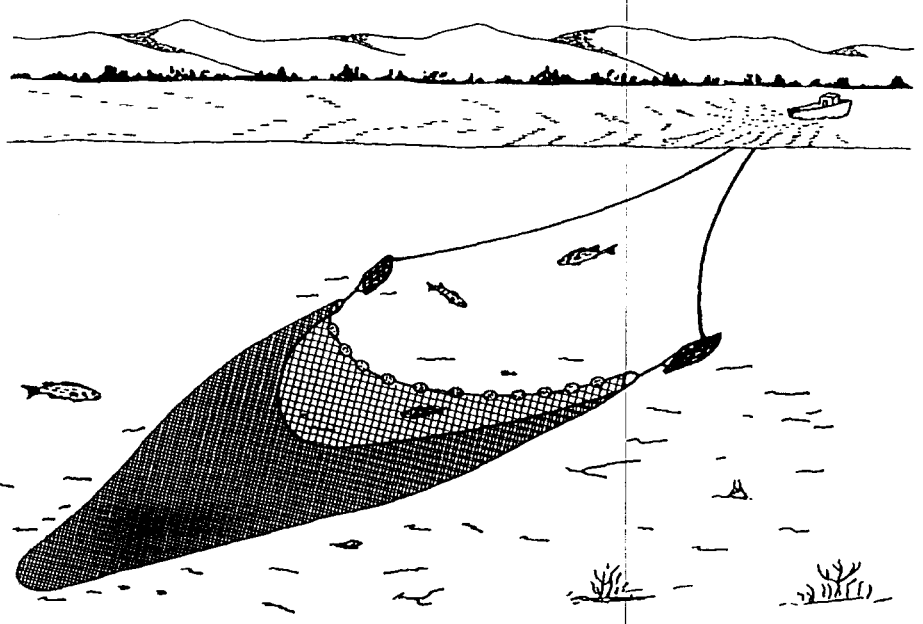

Figure 52.—Otter trawl (modified from Dumont and Sundstrom, 1961).

Ichthyocides

Ichthyocides, or fish toxicants, provide a good sampling method for making qualitative and quantitative studies of fish populations. Relative abundance, diversity, and biomass can be estimated more precisely using ichthyocides than using any other means. However, their use requires careful planning, and special permits from State conservation agencies usually are required.

Rotenone obtained as an emulsion, containing 5-percent active ingredient, is the most popular chemical because it is relatively safe to use, is not persistent in the environment, and is fairly easy to detoxify. A general review of the literature about ichthyocides was prepared by Lennon and others (1971) and about rotenone specifically by Schnick (1974).

Fish toxicants generally are used in areas such as small embayments of lakes and reservoirs or short reaches of streams or rivers. The concentration of active ingredient necessary to effect a good recovery of most fish is dependent on the species present and the alkalinity of the water. Alkaline water requires a larger concentration as do species of bullheads, carp, and eels. The successful use of rotenone is dependent on exposing the desired fish population to a lethal dose (generally 0.25 to 1 mg/L) for at least 15 minutes.

The use of rotenone in small streams is discussed by Lennon and Parker (1959) and Boccardy and Cooper (1963), in large rivers by Hocutt and others (1973), and in impoundment surveys by Eschmeyer (1939), Lambou (1959), and Bone (1970). Weber (1973) describes several methods of application.

To determine the quantity of rotenone to use, calculate the volume (acre-feet) of water to be treated. For lakes, the volume is simply the area times the mean depth, divided by 43,560 to obtain acre-feet. Because 1 acre-ft of water weighs 2,718,144 lb, an investigator would need approximately 2.7 lb of rotenone for a concentration of 1 (mg/L)/acre-ft. For streams, the quantity of rotenone is based on the cubic feet of water passing a point in the stream for the 15 minutes necessary for the exposure period. To calculate, multiply width times mean depth times velocity, which equals cubic feet of water per second. Cubic feet per second times 900 seconds (15 minutes) equals total cubic feet of water to treat. Total cubic feet divided by 43,560 equals acre-feet of water.

Potassium permanganate ($KMnO_4$) is used to detoxify the rotenone. To calculate the quantity of $KMnO_4$ necessary to detoxify the rotenone, calculate the weight of water treated and apply $KMnO_4$ at the same concentration that the rotenone was applied.

Hook and line

Although the method is too selective to be used for population studies, it is a useful technique for capturing small numbers of adult fish for metal or pesticide analyses when other methods are impractical.

Passive sampling gear

Gill nets and other entanglement and entrapment devices are used to passively sample fish communities in lakes, reservoirs, estuaries, and large slow-moving rivers. Gill nets hang vertically in the water and may be fished at the surface or at any depth. Because fish caught in the net die within a short period of time, the nets need to be checked at least once every 12 hours. Gill nets are set most successfully in the evening and recovered early the next morning. Gill nets generally are set perpendicular to the shoreline. Lackey (1968) and Jester (1977) describe the effective use of gill nets (fig. 53).

Drifting gill nets are set and fished the same way as stationary gill nets except they are allowed to drift with the current. Gill nets are selective in what they capture because of the size of the mesh of the net and because some species are more susceptible to nets than others (Berst, 1961).

Entrapment devices include a variety of nets and traps designed to lure and guide the fish through a series of funnels from which it cannot escape (Beamish, 1973; Yeh, 1977). The two most common devices are the hoop net (figs. 54, 55) and the trap net. These devices are easily set from a small boat. The nets are held in place by anchors or poles and are used in water less than 4 m deep. Fyke nets are a type of hoop net that has wings, or a lead, or both. They are used in lakes and reservoirs where fish movement is more random. Trap nets are similar to hoop nets except floats and weights instead of hoops are used to give the net shape. An adequate sample of fish often can be captured by using a combination of hoop and trap nets of various mesh sizes in the available habitat.

Investigation of fish kills

For investigation of fish kills, collect live or distressed specimens, if possible, because they are more suitable for pathological and histological examination. Specimens generally can be collected using a dip net. Specimens that have died recently are a second choice, but the fact that they were dead when collected should be noted clearly on the sample label. Collect about 0.5 kg of fish or other vertebrates and, if possible, about five individuals if the whole animal is to be ground for analysis. Collect a proportionally larger sample when individual tissues are to be analyzed. Generally, a sample of 5 kg will be adequate.

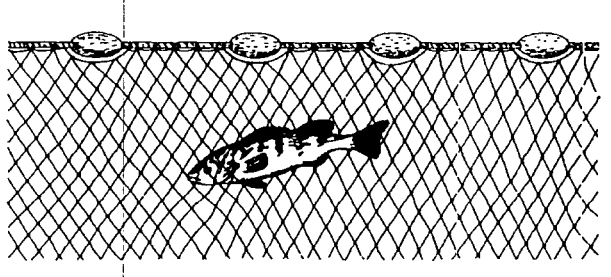

Figure 53.—Gill net (modified from Dumont and Sundstrom, 1961).

Collect specimens of the same type of organism as those affected from an area within the same body of water that had not been contaminated by the causative agent. These specimens should be handled separately. Collect 20 or more drops of blood from these specimens in a solvent-rinsed vial, seal with teflon or aluminum foil, cap, and freeze. Collection method will depend on the type of habitat to be sampled (Lagler, 1956).

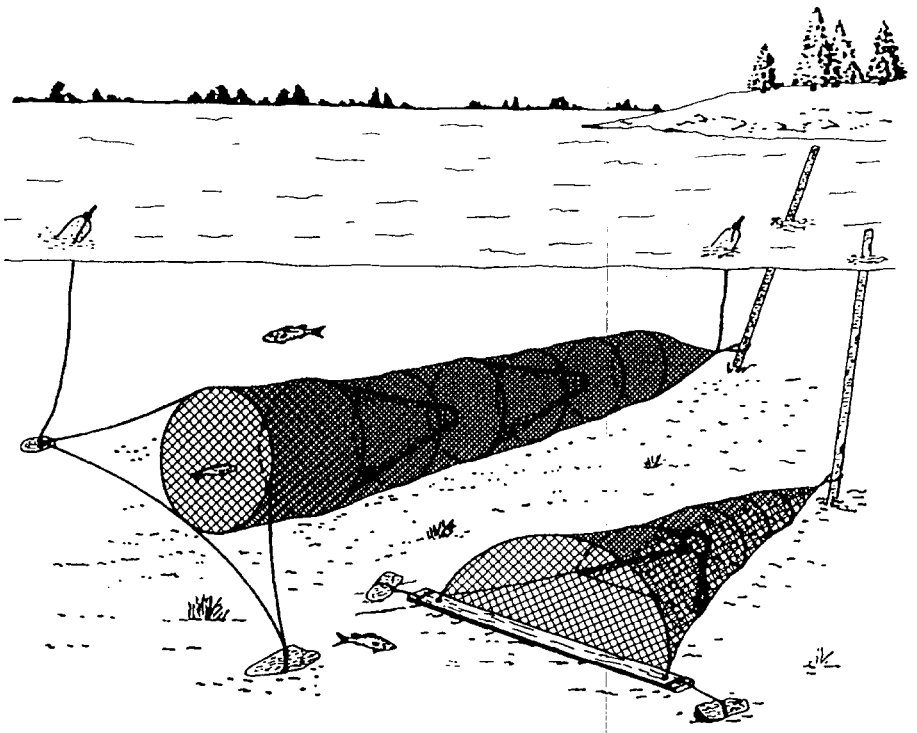

Figure 54.—Hoop net (modified from Dumont and Sundstrom, 1961).

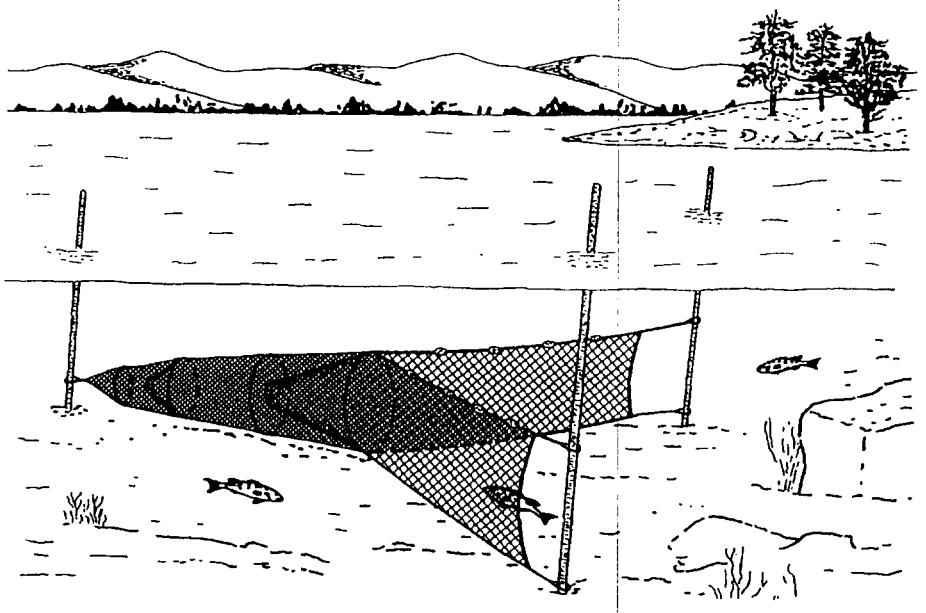

Figure 55.—Fyke net (modified from Dumont and Sundstrom, 1961).

Identify preserved specimens using the best available taxonomic keys or other appropriate means. Proper identification of species involved is necessary to assess the monetary loss due to the destruction of valuable fish and other animal life.

Preparation and storage

Package the fish in labeled polyethylene bags and freeze (Note 1). Samples may be packed in insulated cartons or chests and refrigerated using about 5 kg of dry ice per 5 to 8 kg of fish.

Note 1: Samples collected for polychlorinated biphenyl (PCB) or other organic-compound analysis should be stored in glass containers or wrapped in aluminum foil. If freezing facilities are not available, preserve the fish in ethyl alcohol (Cope, 1960; Wood, 1960).

Before placing in the preservative, slit each fish from the anus to the gills. Use at least five volumes of preservative for each volume of fish. To avoid contamination, package the fish collected dead separately from those that were collected alive. Labels placed in the same bag with wet fish may become illegible. Tie labels to the outside of the bag.

Estimate the intensity or degree of kill by counting the number of distressed or dead fish per unit length of shoreline, water-surface area, or number of fish passing a point per unit time. Record any factors at the site of the kill that will be useful in identifying the source of the kill. At a minimum, record the name and location of water, time, date, general characteristics of water (color, odor, and other characteristics), and present and previous weather conditions. Also, record name and telephone number of agency or individual reporting the kill, suspected causative agent(s), and suspected source(s).

Whenever possible, measure dissolved oxygen, temperature, pH, and specific conductance upstream and downstream from suspected source(s) of pollutant(s). Also, collect an adequate number of water samples (at least 1 L) upstream from and at the source(s) of suspected pollutant(s). The samples should be chilled to 4 °C.

References cited

American Public Health Association, American Water Works Association, and Water Pollution Control Federation, 1985, Standard methods for the examination of water and wastewater (16th ed.): Washington, D.C., American Public Health Association, 1,268 p.

Beamish, R.J., 1973, Design of the trap net with interchangeable parts for the capture of large and small fishes from varying depths: Fisheries Research Board of Canada Bulletin 30, p. 587-590.

Berst, A.H., 1961, Selectivity and efficiency of experimental gill nets in South Bay and Georganian Bay of Lake Huron: Transactions of the American Fisheries Society, v. 90, p. 412-418.

Boccardy, J.A., and Cooper, E.L., 1963, The use of rotenone in surveying small streams: Transactions of the American Fisheries Society, v. 92, p. 307-310.

Bone, J.N., 1970, A method for dispensing rotenone emulsions: British Columbia Fish and Wildlife Branch, Fish Management Report 62, p. 1-3.

Cope, O.B., 1960, Collection and preservation of fish and other materials exposed to pesticides: Progressive Fish Culturist, v. 22, p. 103-108.

Cross, D.G., and Stott, B., 1975, The effects of electric fishing on the subsequent capture of fish: Journal of Fisheries Biology, v. 7, no. 3, p. 349-357.

Czajka, A.F., and Nickerson, M.A., 1977, State regulations for collecting reptiles and amphibians in the fifty United States: Milwaukee Public Museum Special Publication in Biology and Geology 1, p. 1-79.

Dumont, W.H., and Sundstrom, G.T., 1961, Commercial fishing gear of the United States: Washington, D.C., U.S. Government Printing Office, Fish and Wildlife Circular 109, 61 p.

Eschmeyer, R.W., 1939, Analyses of the complete fish population from Howe Lake, Crawford County, Michigan: Papers of the Michigan Academy of Sciences, Arts, and Letters, v. 24, no. 2, p. 117-137.

Everhart, W.H., Eipper, A.W., and Youngs, W.D., 1975, Principles of fisheries science: Ithaca, N.Y., Cornell University Press, 288 p.

Frankenberger, L., 1960, Applications of a boat-rigged direct-current shocker on lakes and streams in west-central Wisconsin: Progressive Fish Culturist, v. 22, p. 124-128.

Friedman, R., 1974, Electrofishing for population sampling—A selected bibliography: U.S.Department of the Interior, Office of Library Services, Bibliographic Serial 31, 13 p.

Hocutt, C.H., 1978, Fish, *in* Mason, W.T., Jr., ed., Methods for assessment and prediction of mineral mining impacts on aquatic communities—A review and analysis: U.S. Department of the Interior, Fish and Wildlife Service Report FWS/OBS-78/30, p. 80-103.

Hocutt, C.H., Hambrick, P.S., and Masnik, M.T., 1973, Rotenone methods in a large river system: Archives of Hydrobiology, v. 72, no. 2, p. 245-252.

Jester, D.B., 1977, Effects of color, mesh size, fishing in seasonal concentrations, and baiting on catch rates of fishes in gill nets: Transactions of the American Fisheries Society, v. 106, p. 43-56.

Lackey, R.T., 1968, Vertical gill nets for studying depth distribution of small fish: Transactions of the American Fisheries Society, v. 97, p. 296-299.

Lagler, K.R., 1956, Freshwater fishery biology (2d ed.): Dubuque, Iowa, William C. Brown Co., 421 p.

Lambou, V.W., 1959, Blockoff net for taking fish population samples: Progressive Fish Culturist, v. 21, p. 143-144.

Lennon, R.E., Hunn, J.B., Schnick, R.A., and Burress, R.M., 1971, Reclamation of ponds, lakes and streams with fish toxicant—A review: U.S. Fish and Wildlife Service, U.N. Report for Period 100:Fish-Technical Report 100, 9 p.

Lennon, R.E., and Parker, P.S., 1959, Reclamation of Indian and Abrams Creeks in Great Smokey Mountain National Park: U.S. Fish and Wildlife Service Special Scientific Report 306, 22 p.

Massman, W.H., Ladd, E.E., and McCutcheon, H.N., 1952, A surface trawl for sampling young fishes in tidal rivers: Transactions of the North American Wildlife Conference, no. 17, p. 386-392.

Ramsey, J.S., 1968, Freshwater fishes, *in* Parrish, F.K., and others, Water-quality indicative organisms (southeastern U.S.): Federal Water Pollution Control Administration, p. y-1 to y-15.

Rounsefell, G.A., and Everhart, W.H., 1953, Fishery science—Its methods and applications: New York, John Wiley and Sons, 444 p.

Schnick, R.A., 1974, A review of the literature on the use of rotenone in fisheries: La Crosse, Wis., Fish Control Laboratory, 130 p. [Available from U.S. Department of Commerce, National Technical Information Service, Springfield, VA 22161 as publication FWS-LR-74 15.]

Sharpe, F.P., 1964, An electrofishing boat with a variable-voltage pulsator for lake and reservoir studies: U.S. Bureau of Sport Fisheries and Wildlife Circular 195, 6 p.

Sharpe, F.P., and Burkhard, W.T., 1969, A lightweight backpack high-voltage electrofishing suit: U.S. Bureau of Sport Fisheries and Wildlife Resources Publication 78, 8 p.

Weber, C.I., ed., 1973, Biological field and laboratory methods for measuring the quality of surface waters and effluents: U.S. Environmental Pro-

Monitoring, Assessment and Reporting Guidance

Databases and Mapping

Biological Assessment

Volunteer Monitoring

Meetings/Training/ Events

Related Links

Chapter 7
Tiered Sampling

This chapter provides general guidance for designing a sampling program for lake bioassessment. Four sampling tiers are suggested options, and will need to be modified to meet the sampling objectives, project resources, and local conditions of individual programs.

Options for lake biological sampling include two sampling tiers, each with an "A" and "B" field component (Figure 7-1). There is also a desktop screening process, with no field sampling. Although sampling effort increases from Tier 1A to Tier 2B, quality of information is not necessarily related to sampling effort. Selection of a sampling tier must be based on the objectives of the biocriteria program. Tier 1 includes chlorophyll a and submerged macrophytes, and is consistent with Clean Lakes Program sampling. Tier 1 may be a single sample during a summer index period (Tier 1A) or monthly sampling during the growing season (Tier 1B). Tier 2A consists of assemblages that can be sampled a single time during the index period: submerged macrophytes, benthic macroinvertebrates, fish, or sedimented diatoms. Tier 2B consists of assemblages that are sampled several times during the growing season: phytoplankton, zooplankton, and periphyton. Both Tier 2A and Tier 2B require Tier 1 sampling. Although Tier 2A and 2B were developed as an "either or" choice, it is possible to perform both surveys as the assemblages sampled in each do not over-lap. It should also be understood that although Tier 2B requires more effort and yields a greater quantity of data, due to multiple site visits, it does not necessarily produce better data than Tier 2A. A supplemental habitat assessment that includes diagnostic elements (as detailed in Chapter 5) can be added to any of the tiers.

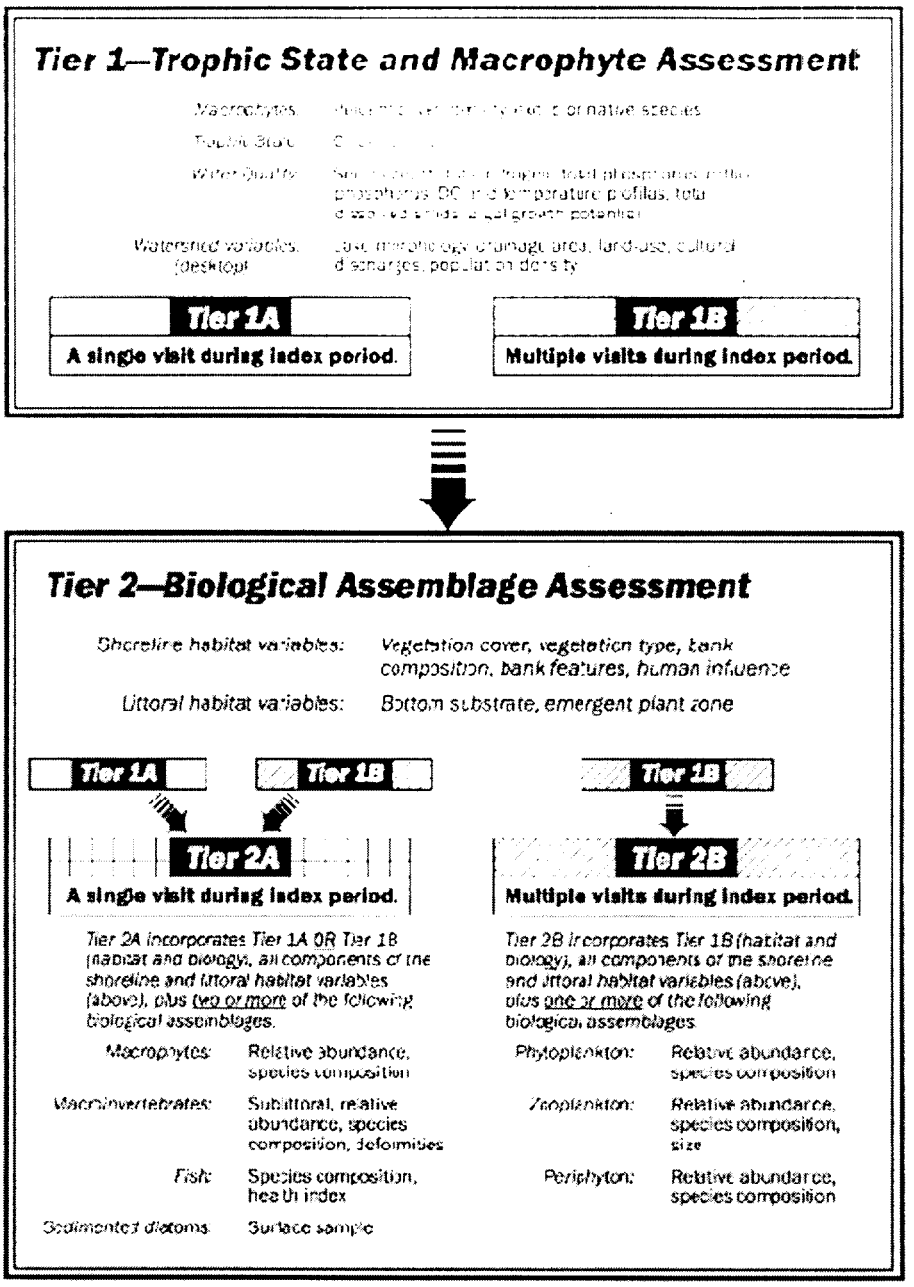

Figure 7-1. Tiered sampling structure.

7.1 Desktop Screening

The desktop screening assessment involves documentation of existing data without any observations in the field (Table 7-1). No assessment can be better than the data that go into it; therefore, desktop screening alone might be unreliable. Its use should be limited to planning for more detailed monitoring and assessment. It incorporates cost and time efficiencies, allowing evaluation of a large number of sites, and identifying potentially affected areas for further investigation using higher tiers. Information is obtained from land use data and from a questionnaire to identify known problems in a lake (Table 7-1).

Table 7-1. Desktop screening assessment.

	Component	Data Collection	Responds to or indicator of
Watershed Components	1. Watershed land use, NPDES.	Maps, existing database, questionnaire. GIS databases, e.g. EPA Reach File; EPA BASINS Census Bureau TIGER, USGS Land Use, Land Cover.	Identification of potential point and nonpoint source eutrophication or toxicity problems.
Biological Components	1. Algal production Bloom history	Questionnaire	Identification of perceived problems (eutrophication).
	2. Plant assemblage - Macrophyte cover - Extent (% available habitat) - Density (% cover) - Known weed problems	Questionnaire	Identification of perceived problems (weeds, exotic plants, loss of native plants).
	3. Fish assemblage - Fishery problems	Questionnaire	Identification of perceived problems (species imbalance, exotic species, overfishing, overstocking, diseased).

The questionnaire identifies existing known problems in lakes, but does not address new problems. An example questionnaire (Figure 7-2) is modeled after one for stream bioassessment (USEPA 1989b). Potential recipients of the questionnaire include regional biologists from natural resource agencies, the Cooperative Extension Service (CES), and academic biologists. Land use, NPDES, and population density data will identify lakes likely to have problems requiring further attention (primarily from eutrophication), but will not estimate biological impairment in the lakes. Components of desktop screening include the following:

Figure 7-2. Example of desktop screening questionnaire.

LAKE BIOASSESSMENT QUESTIONNAIRE

This questionnaire is part of an effort to assess the biological health or integrity of lakes of this region. Our principal focus is on the biotic health of the designated waterbody as indicated by its biological assemblages and watershed use. You were selected to participate in the study because of your expertise in one or more of these areas and your knowledge of the waterbody identified in this questionnaire.

Please complete all statements. If you feel that you cannot complete the questionnaire but are aware of someone who is familiar with the waterbody, please give this person's name, address, and telephone number in the space provided below.

_____

_____

_____

Waterbody name: _____

Waterbody location (see map):
State _____ County _____ Long/Lat _____ Ecoregion _____

Lake size _____ acres or (circle one): <10 acres, 10-100 acres, 100-1000 acres, 1000-10,000 acres, >10,000 acres

SECTION A - OVERALL ASSESSMENT

(Instructions: Answer questions 1 - 4 using the following scale. Answer by circling only **one** score for each question).

Score	Description
5	Species composition, age classes, and trophic structure comparable to non (or minimally) impacted sites of similar waterbody size in that ecoregion.
4	Species richness somewhat reduced by loss of some intolerant species; young of the year of top carnivores rare; less than optimal abundances, age distributions, and trophic structure for waterbody size and ecoregion.
3	Intolerant species absent, considerably fewer species and individuals than expected for that waterbody size and ecoregion, older age classes of top carnivores rare, trophic structure skewed toward omnivory.
2	Dominated by highly tolerant species, omnivores, and habitat generalists; top carnivores rare or absent; older age classes of all but tolerant species rare; diseased fish and anomalies relatively common for that waterbody size and ecoregion.
1	Few individuals and species present, mostly tolerant species and small individuals, diseased fish and anomalies abundant compared to other similar sized waterbodies in ecoregion.
0	No fish.

1. Circle the score that best describes your impression of the current condition of the waterbody.

   5 4 3 2 1 0

2. Classify the condition of the lake 10 years ago.

   5 4 3 2 1 0

3. Given present trends, what score will be representative of lake conditions 10 years from now?

   5 4 3 2 1 0

4. If the major human-caused limiting factors were eliminated, how would the lake be rated 10 years from now?

   5 4 3 2 1 0

Subsection A.1 - WATER QUALITY

(Instructions: Complete subsections A.1 - A.4 by **circling** the single most appropriate limiting factor and probable cause. If there is more than one limiting factor and cause, please **rank** them accordingly (by assigning a "1" for the primary factor and cause, "2" for the secondary factor and cause, etc.)

Limiting Factor	Rank	Probable Cause	Rank
Temperature too high		Quality of tributaries	
Temperature too low		In-lake processes	
Turbidity		Point source discharge	
Salinity		Industrial	
Dissolved oxygen		Municipal	
Gas supersaturation		Combined sewer	
pH too acidic		Mining	
pH too basic		Upstream dam release	
Nutrient deficiency		Nonpoint source discharge	
Nutrient surplus		Individual sewage	
Toxic substances		Urban runoff	
Excessive water level fluctuation		Landfill leachate	
		Construction	
Other (specify below)		Agriculture	
		Feedlot	
Not limiting		Grazing	
		Silviculture	
		Mining	
		Dam surface release	
		Shorezone disturbance	
		Natural	
		Unknown	
		Other (specify below)	

Subsection A.2 - HABITAT STRUCTURE

Limiting Factor	Rank	Probable Cause	Rank
Excessive siltation		Agriculture	
Insufficient structure	_____	Silviculture	_____
Insufficient shallows		Mining	
Insufficient macrophytes		Grazing	
Excessive macrophytes	_____	Dam	_____
Insufficient concealment	_____	Diversion	_____
Insufficient reproductive habitat		Channelization	
		Snagging	
Other (specify below)	_____	Natural	_____
_____		Aquatic weed management	
Not limiting		Unknown	
		Other (specify below)	_____
		_____	

Subsection A.3 - FISH COMMUNITY

Limiting Factor	Rank	Probable Cause	Rank
Overharvest		Aquarists	
Underharvest		Point source	
Fish stocking	_____	Nonpoint source	_____
Non-native species	_____	Natural	_____
Migration barrier		Unknown	
Tainting		Management	
Food limited	_____	State agency	_____
Habitat	_____	Federal agency	_____
Fish kills		Weed Control	
Other (specify below)		Other (specify below)	
_____		_____	
Not limiting	_____		

Subsection A.4 - MAJOR LIMITING FACTOR

Limiting Factor	Rank
Water quality	
Water quantity	
Habitat structure	_____
Fish community	_____
Other (specify below)	_____
_____	

Subsection A.5 - ALGAE

(Instructions: Please provide short answers to questions 1-7, as appropriate).

1. Is the oral presence and history of nuisance algae blooms?
2. Have algae blooms resulted in fish kills or other adverse changes to the fish community?
3. Has algae caused odor problems or taste problems in drinking water?
4. Have algae blooms deterred swimmers or affected other forms of contact recreation?
5. Are there other problems caused by algae blooms; and if so, what are they?
6. What is the source of your information? _____
7. Are there other sources of information that the agency should be aware of such as fishery records and grey literature studies? _____

SECTION B - AQUATIC MACROPHYTE COMMUNITY

(Instructions: Answer questions 1 - 3 using the following scale. Circle only one score for each question).

Score	Description
3	Extent and cover are comparable to non (or minimally) impacted sites of similar waterbody size in that ecoregion.
2	Macrophyte beds appear weedy. The extent and/or cover are greater than non (or minimally) impacted sites. The dominant species are those found in highly eutrophic waters.
1	Few macrophytes found compared to non (or minimally) impacted sites. Macrophytes that are found are usually exotics and are tolerant of a wide range of water quality conditions and/or fluctuations
0	No macrophytes.

1. Circle the score that best describes your impression of the current macrophyte conditions of the lake.

   3 2 1 0

2. Classify the macrophyte conditions of this lake 10 years ago.

   3 2 1 0

3. Given the present trends, what score will be representative of lake conditions 10 years from now?

   3 2 1 0

Subsection B.1 - FACTORS EFFECTING MACROPHYTES

(Instructions: Complete subsection by circling the single most appropriate limiting factor and probable cause. If there is more than one limiting factor and cause, please rank them accordingly by assigning a "1" for the primary factor and cause, "2" for the secondary factor and cause, etc.)

Limiting Factor	Rank	Probable Cause	Rank
Grass carp introduction	____	Air pollution	____
Exotic species		Point source	
Excessive siltation		Nonpoint source	
Drawdowns	____	Natural	____
Weed control		Unknown	
Shoreline clearing		Management	
Excessive epiphytes	____	state agency	____
Excessive turbidity	____	Federal agency	____
Insufficient shallows		Fisherman	
Elevation or latitude		Other (specify below)	
Macrophyte beds are expanding			
Other (specify below)			
Not limiting	____		

Subsection B.2 - MACROPHYTE EXTENT AND SPECIES

(Instructions: Please provide short answers to questions 1 - 4, as appropriate.)

1. What is the extent of macrophyte coverage in the photic zone? _____

2. What are the dominant species? _____

3. What is the source of your information on macrophytes? _____

4. Are there other sources of information on the macrophyte community in this waterbody that the agency should be aware of such as management reports or grey literature studies? _____

SECTION C - WATERSHED CHARACTERISTICS AND LAND USE

(Instructions: Please provide short answers to questions 1 - 11, as appropriate.)

1. Watershed size _____ acres
2. Elevation difference _____ ft (watershed divide to lake surface)
3. Forest or natural vegetation _____
4. Agricultural _____ %
5. Urban _____ %
6. Suburban/residential _____ %
7. Human population density in lake watershed _____
8. Number of dischargers within the watershed (e.g., NPDES permits)
9. What is the source of your information on the watershed? _____
10. Are there other sources of information on the watershed and surrounding land use that the agency should be aware of such as grey literature or land use planning documents? _____

Land Use - Land use information indicates the relative level of anthropogenic stresses in a lake watershed, especially nonpoint sources of pollutants. Many states estimate land use from satellite images.

Discharges - USEPA maintains a data base of NPDES discharges and their receiving waters.

Algae - Questions on the history of nuisance algal blooms and perceived problems with high turbidity due to algae are included in the questionnaire (Figure 7-2).

Macrophyte Survey - Local professionals knowledgeable of the macrophytes in the lake(s) are canvassed for existing data and information (Figure 7-2). The questionnaire can provide the following information:

- Extent of coverage.
- Dominant species.
- Past and present characteristics of the macrophyte assemblage.
- Factors believed to be limiting or expanding the spread of macrophytes.
- Past or present management practices used for control of macrophytes.

Fish Assemblage - Local professionals knowledgeable about fish assemblages can provide the following information:

- Expected condition of the fish assemblage.
- Likelihood of improvement and degradation.
- Major limiting factors.
- Water quality
- Habitat availability
- Management, harvest, or mortality

Desktop Integration

Based on responses to the questionnaire, perceived levels of impairment can be judged from the three biological assemblages: algae, macrophytes, and fish. The three evaluations are kept separate. Perception of a problem, or a substantial departure from expected conditions, earns a rating of "impaired" for the respective assemblage. The land use information is used to identify potential stressors on a lake.

7.2 Tier 1: Trophic State and Macrophytes

Tier 1 requires sampling of primary producers to assess trophic state and aquatic macrophytes. It can be done with a single visit during an index period when the objective is a synoptic survey and screening of many lakes (Tier 1A). Tier 1A is only appropriate for regional assessments—it cannot be used to assess single lakes. More precise estimates for single lakes can be made with Tier 1B, comprising several sampling visits to determine growing season averages. Tier 1 consists of the Desktop Screening land use survey, lake physical habitat, water chemistry (dissolved oxygen, nutrient concentrations, conductivity, alkalinity, pH), Secchi depth, chlorophyll a concentration, and a submerged macrophyte survey (Table 7-2). The survey enables:

- Identification of trophic state based on chlorophyll a concentration, nutrient concentration, and Secchi depth.
- Detection of weed problems or loss of aquatic macrophytes.
- Detection of midsummer oxygen stress.

Table 7-2. Tier 1: Trophic state and macrophyte sampling.

	Component	Data Collection: Tier 1A	Data Collection: Tier 1B	Responds to or Indicator of
Habitat Components	1. Watershed land use, population, NPDES.	Maps, existing database, questionnaire GIS databases, e.g., EPA Reach File; EPA BASINS; Census Bureau TIGER, USGS Land Use, Land Cover. Desktop screening habitat		Potential causes
Habitat Components	2. In-lake physical habitat maximum depth area inflow	Maps or survey (single visit).		Potential causes.
Habitat Components	3. Water Quality - DO, temperature profile - pH, alkalinity, conductivity - Secchi depth - Total dissolved solids - Nutrient concentration - Algal growth potential	Single index period. Surface or integrated.	Multiple visits. Water column sample.	DO problems, eutrophication, stratification, acidification, turbidity.
Biological Components	4. Algal chlorophyll *a* concentration.	Single visit chlorophyll sample from 0.5m. Surface integrated water sample.	Multiple visits.	Eutrophication
Biological Components	5a. Submerged macrophytes - % of available habitat with macrophytes - dominant species	Single visit, aerial photos if possible; otherwise, estimate from shorezone survey. Identify dominant species.	Multiple visits.	Eutrophication, herbicides, exotics

7.2.1 Sampling Frequency for TSI Variables (Tier 1A vs. Tier 1B)

Tier 1A consists of sampling during an index period, typically mid to late summer for trophic state variables (e.g., chlorophyll a, Secchi depth, nutrients). Tier 1A is adequate for characterization of lakes in a region, when many lakes must be sampled to develop the characterization and assessment. Tier 1A will yield a good characterization of a region or a population of lakes, but precise characterization of individual lakes, for site-specific management, will require Tier 1B, with more frequent sampling. Tier 1B takes into account the changes in chlorophyll and nutrients that can occur in a short time and is used to estimate seasonal averages of the variables by sampling several times during the growing season. Trophic State Indices (TSI) are calculated from the seasonal average estimates of chlorophyll, Secchi depth, and nutrients. The number of sampling visits required depends on the temporal variation in the lake and the desired precision of the estimated seasonal average. Monthly sampling appears to be adequate for most purposes (Knowlton and Jones 1989).

7.2.2 Sample Locations for Trophic State Measurements

Design of a sampling program inevitably requires compromises to answer the intended questions in a reasonable time and at a reasonable cost. In lake biosurveys, the unit of interest (sampling unit) may be the whole lake, a lake basin, a tributary arm, or an embayment. In some situations, the unit of interest may be an area of the lake receiving discharges or runoff. The object of sampling is to

characterize the sampling units with sufficient precision and accuracy to meet the needs of the program.

Sample sites are selected to be representative of the lake. Single sites have traditionally been located in the middle of the lake, usually over the deepest area For unbiased characterization, multiple sites should be selected randomly. Sampling may be stratified by zones, e.g., littoral, pelagic, and inflows; or riverine, transitional, and lacustrine (Figure 7-3). Estimation of mean values for the whole lake should be weighted by the relative area or volume of each zone. Figure 7-4 shows an example of sampling locations for all tiers in a relatively simple lake (natural or impoundment).

Figure 7-3. Sampling zones in large or complex lakes (large reservoirs, multi-basin lakes).

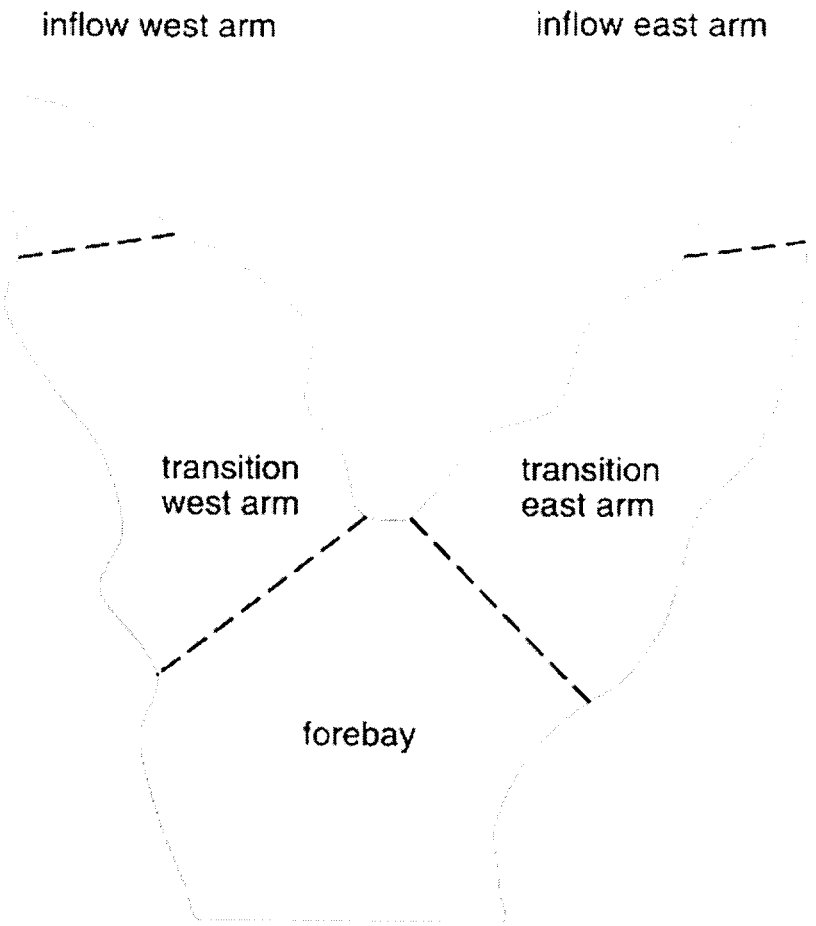

Figure 7-4. Integrated sampling, Tiers 1 and 2.

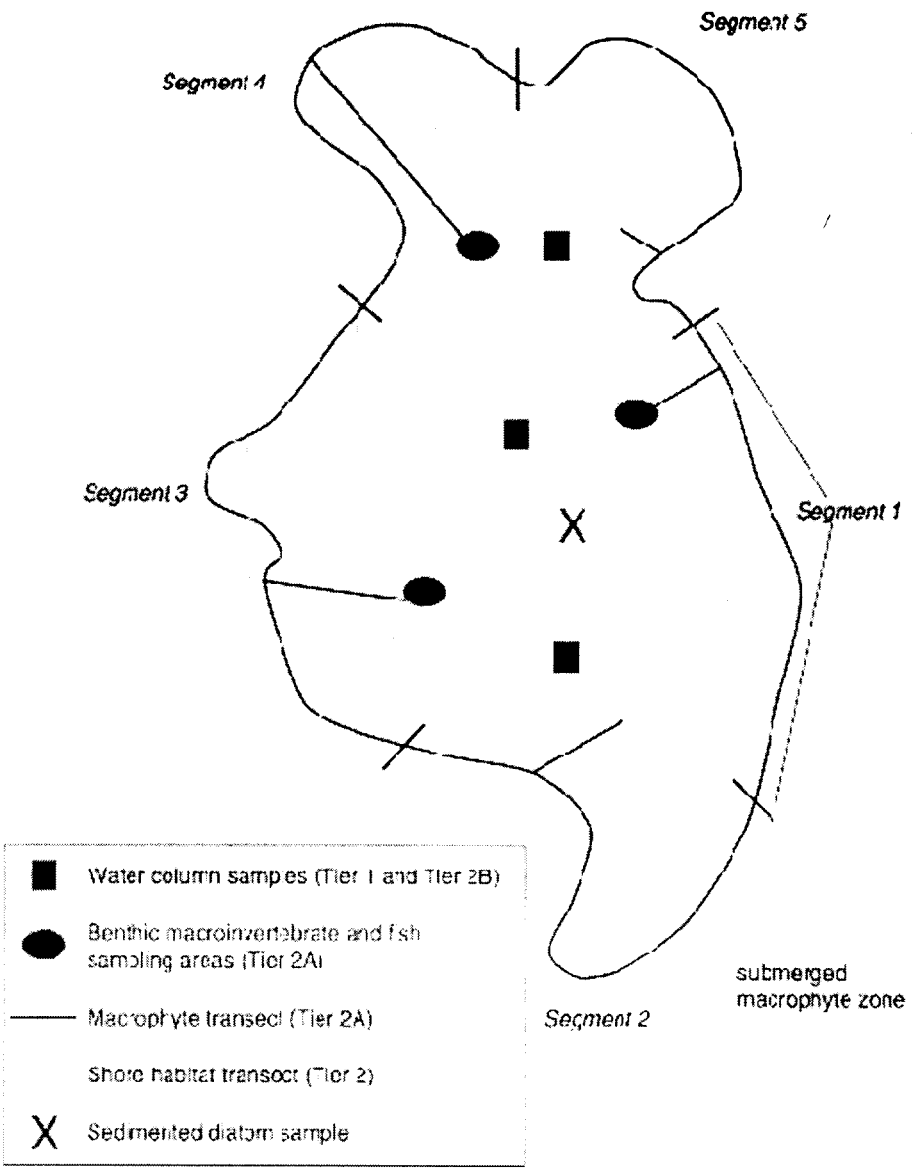

Lakes may be characterized by single or multiple sample sites in each lake, depending on the objectives of the survey.

Single sample site

If the objective is to characterize a large population of lakes, as in a statewide survey, then a single sample per lake is most cost-effective. A single site is typically chosen as the midpoint of the central basin of the lake, and is usually sufficient to prioritize lakes within a region.

RESERVOIR Large riverine reservoirs have known gradients of nutrients and productivity from the river inflow to the dam (Kennedy and Walker 1990), and a single site is not appropriate. Large reservoirs would require a minimum of three sites, corresponding to the riverine, transitional, and lacustrine zones, respectively (Figure 7-3

Multiple sites

If turbidity, nutrients, and algae are known to be variable across the surface of a lake, then multiple sample sites are required (Figure 7-4).

If gradients are known to occur, as in many large reservoirs, then sampling should be stratified by zones. For example, in a reservoir one could define the three reservoir zones (riverine, transitional, lacustrine) as sampling strata, and take two or more samples from each zone.

The exact number of sampling sites in a lake or lake zone is determined by the spatial variability of nutrients, turbidity, and chlorophyll; and the desired precision. In general, within a basin or reservoir zone, variation in time is larger than variation in space (Knowlton and Jones 1989). Thus, chlorophyll sampled 2 weeks apart may differ by several fold, but samples on the same day 500m apart are likely to differ much less.

If precise characterization of individual lakes is an objective of the biological survey then it is more cost-effective to sample repeatedly during the growing season (Tier 1B) than to sample multiple sites at a single time (Tier 1A).

Composite samples

Composite samples are taken from several sites in a lake or lake zone, and combined into a single sample for laboratory analysis. For example, water samples may be taken from four sites in a lake, and poured into a single clean bucket. The composite sample is subsampled for chlorophyll a and nutrients. Secchi depth temperature, and DO are measured at each of the four sites. Care must be taken that the methods and volume sampled are the same at each site. Composite samples characterize the lake better than a single sample and they save laboratory analysis costs. The principal disadvantage of composite samples is that they do not allow estimation of spatial variability within a lake.

Table 7-3. Sampling summary for chlorophyll, water quality, and phytoplankton.

Habitat	Open water, 1 to 5 sites per lake or lake stratum.
Sampling Gear	Hand-held bottle or flexible hose.
Index Period	Single mid-season sample (Tier 1A) or monthly samples during growing season (Tier 1B, Tier 2B).
Sampling	Bottle: invert bottle at arm's length depth (0.5 m); turn. Uphose: lower open weighted hose through water column to predetermined depth, stopper, and haul up.
Analysis	Chlorophyll and water quality: standard methods. Phytoplankton: filter or settle and identify 300 to 500 cells to genus

7.2.3 Trophic State

The Tier 1 Trophic State Indices (TSI) are estimated from Secchi depth, chlorophyll a, and nutrient concentrations. Field methods for Secchi transparency and chlorophyll a are outlined below and summarized in Table 7-4.

Table 7-4. Tier 2A: Routine biological sampling.

	Component	Data Collection	Responds to or Indicator of
Habitat Components	1. Watershed land use, population, NPDES.	Desktop screening habitat.	
	2. Lake physical.	Tier 1 habitat.	
	3. Shorezone habitat assessment.	3-10 transects: - land use bank stability - riparian vegetation - emergent vegetation	
	4. Water quality DO seasonal or annual mean, % depth-time Mean pH, alkalinity Secchi depth.	Tier 1 water quality (1A or 1B).	Trophic state, turbidity
Biological Components	5. Algal chlorophyll *a*.	Tier 1 chlorophyll (1A or 1B).	Trophic state.
	6, 7. Assemblages (minimum 2):		
	a. Macrophyte species.	2-3 samples from transects; identify plants to species and weigh cumulative sample of each species, or count stems.	Trophic state, exotics, herbicides.
	b. Macrobenthos	Sublittoral surface sediment grab at end of each transect; identify to lowest practical level, 100-200 organisms.	DO, siltation, toxicity, productivity.
	c. Fish assemblages.	Littoral electrofishing sample at the end of each transect; sublittoral netting; identify to species, enumerate, weigh, and record incidence of external anomalies.	DO, toxicity, productivity.
	d. Sediment diatoms.	Surface sediment grab in deepest part of lake; identify to species and variety.	Nutrient enrichment, toxicity.

Secchi Depth (SD)

Secchi depth is a measure of transparency. Turbidity caused by suspended sediments and algae decreases Secchi depth.

Sampling Location - Secchi disk transparency can be measured at one or more representative locations.

Frequency - Tiers 1A and 2A: single determination, midsummer. Tiers 1B and 2B: 6 to 10 samples during the growing season (e.g., March through October).

Sampling Procedure - Readings are obtained with a 20cm plastic or metal Secchi disk that is divided into black and white quadrants on a nonstretchable line, calibrated in centimeters. The disk is lowered into the water until it disappears from view, then is raised slowly to the point where it reappears. Secchi depth is the average of the two depths.

Observations are made from the sunny side of the boat or dock, during midday, without sunglasses, and as close as possible to the water in order to reduce glare.

Data Analysis - Secchi depth can be used in deter-mining trophic state along with chlorophyll a.

Chlorophyll

Chlorophyll a sampling and analysis follow standard protocols (USEPA 1994a,

USEPA 1994b).

Presampling - Samples must be collected in a clean container, without using acid washes or phosphorus detergents. Before sample collection, bottles and collectors should always be double or triple rinsed with the same water to be sampled.

Sample Location - One location or several representative locations for composite sample.

Frequency - The same as Secchi depth.

Depth - Chlorophyll a concentration may be estimated from surface samples taken at 0.5m, from integrated epilimnion samples, or from integrated water column samples. Half-meter surface samples require the least equipment and can be taken by hand; epilimnion and integrated water column samples are taken with a flexible hose.

Sampling Procedure - Surface sample, 0.5m. A rinsed, l-liter sample bottle is inverted and held at depth (arm's length) by hand, turned up to fill, and brought to the surface.

Hose sample - A flexible hose is an easy method to obtain an integrated sample over the whole water column or over a defined portion, such as the epilimnion. The weighted end of a plastic hose is lowered to a given depth. The upper end is stoppered or clamped at the surface, and the weighted end is hauled to the surface with an attached line. The hose is emptied into a clean sample bucket, and chlorophyll and chemical subsamples can be drawn from the integrated sample. The hose may be lowered to 1m above the bottom for a water column sample, to the metalimnion, to twice Secchi depth as an estimate of the photic zone, or to a fixed depth (e.g., 5m). Each standard depth method has its own advantages and disadvantages (Carlson and Simpson 1996). Consistency of sampling method is more important than selecting the "best" standard depth.

Water samples are filtered for chlorophyll a extraction. A "rule of thumb" for the quantity to filter is 100ml for every foot of Secchi depth (330ml for every meter; D. Canfield, personal communication). Samples are vacuum-filtered on glass-fiber paper, and the filter papers are stored frozen in the dark. Detailed instructions for filtering and analysis are in APHA (1992) and USEPA (1994a, 1994b).

Water Chemistry

Samples of water for chemical analysis are collected in the same manner as chlorophyll samples. Sampler bottles should be cleaned in a phosphate-free detergent prior to use and rinsed two to three times in lake water in the field. Samples may need to be preserved or filtered in the field depending upon which chemicals are to be analyzed.

Dissolved Oxygen and Temperature Profiles - A dissolved oxygen/temperature electrode (EPA Method 360.1) is used to measure both dissolved oxygen and temperature. Using the electrode, dissolved oxygen and temperature may be measured at 0.5m intervals to produce dissolved oxygen and temperature profiles. Dissolved oxygen electrodes should be calibrated against standard chemical titration methods before and after field use.

pH, Alkalinity and Acid Neutralizing Capacity - A calibrated pH meter may be used to determine pH. Acid neutralizing capacity is important to the ability of a waterbody to resist changes in pH due to addition of acid and is based upon the alkalinity of

the water and dissociated organic compounds present. Carbonates, bicarbonates and hydroxides are the major contributors to alkalinity which is determined using calorimetric titration methods (APHA 1992). For more precise determination of acid neutralizing capacity, the Gran plot method is used (USEPA 1987a).

Total Dissolved Solids (TDS) - Total dissolved solids consist of inorganic solutes such as nitrates, sulfates, and carbonates, and organic substances dissolved in water (APHA 1992). TDS is measured by first filtering a measured volume of sample water through a filter, and weighing the dried residue. See APHA (1992) for specific methods.

Algal Growth Potential Test (AGPT) - Because nutrients are not always present in a form available to algae, direct chemical measurements may not be predictive of the actual potential for algal growth. The Algal Growth Potential Test (also know as a biostimulation study, APHA 1992) was developed to directly measure in a standardized way the potential of waters to support algal growth.

Total Nitrogen - Nitrogen is an important plant nutrient and may serve as a limiting factor in some waters, especially subtropical lakes. Total nitrogen is a combination of nitrate/nitrite nitrogen and total Kjeldahl nitrogen (organic and reduced nitrogen). Total Kjeldahl nitrogen is measured using a digestion technique that converts organic nitrogen to ammonia and includes any other ammonia present in the sample. Nitrate plus nitrite is measured with standard colorimeter methods (APHA 1992).

Total Phosphorus - Phosphorus is a limiting nutrient in many fresh waters. Total phosphorus can be analyzed using the automated procedure outlined in USEPA Method 365.1.

Estimation of Trophic State

Trophic state determinations provide a method for determining whether increased nutrients or sediments (loading) are causing changes in a lake. Carlson's TSI uses Secchi depth, chlorophyll a, and total phosphorus, each producing an independent measure of trophic state (Carlson 1977). Index values range from approximately 0 (ultraoligotrophic) to 100 (hypereutrophic). The index is scaled so that TSI = 0 represents a Secchi transparency of 64 m. Each halving of transparency represents an increase of 10 TSI units. For example, TSI of 50 represents a transparency of 2m, the approximate division between oligotrophic and eutrophic lakes (USEPA 1990b). A TSI is calculated from each of Secchi depth (SD), chlorophyll concentration (Chl), and total phosphorus concentration (TP) (Carlson 1977, Carlson and Simpson 1996).

$$TSI(Chl) = 30.6 + 9.8 \ln(Chl)$$

$$TSI(TP) = 4.15 + 14.42l \ln(TP)$$

$$TSI(SD) = 60-14.4l \ln(SD)$$

Trophic state indices are used to infer trophic state of a lake and whether algal growth is nutrient limited or light limited. If the three indices are approximately equal, then phosphorus limits algal growth. If the three are not equal, then other interpretations exist (Carlson and Simpson 1996). A trophic state index has also been developed for total nitrogen (TN) (Kratzer and Brezonik 1981, Carlson 1992):

$$TSI(TN) = 54.45 + 14.43 \ln(TN)$$

For a more complete discussion of trophic state indices and their interpretation, see Carlson (1992) and Carlson and Simpson (1996).

7.2.4 Aquatic Macrophytes

The Tier 1 macrophyte survey is a visual estimate of percent cover of submerged and floating macrophytes in shallow water, and identification of the most dominant species and weedy or exotic species. The survey can be done with aerial photographs (if available); a visual whole-lake survey in small lakes, or examination of transects in large lakes. Three to ten transects should be sufficient for most lakes or embayments too large to survey in their entirety. Large lakes with known differences within the lake should be sampled by lake zone; for example, the shallow riverine zones of a reservoir may have greater macrophyte cover than the lacustrine zone.

To avoid bias, transects should be selected randomly within each lake zone. A method of selecting transects is to divide the shore into equal segments (corresponding to the number of transects). A point is selected randomly in each segment as the starting point for transects. Transects are perpendicular to shore to deeper water.

Total vegetative cover is estimated visually. The presence of algae mats and epiphytes should be noted. Cover might be difficult to estimate in turbid waters. Vegetation samples may be collected with a rake and total abundance estimated from the material raked in (ordinal scale: sparse, moderate, abundant). The most dominant species, and any weedy or exotic species, are identified.

7.3 Tier 2A: Biological Assemblage Assessment

Tier 2A sampling requires two or more lake biotic assemblages: macrophytes, sedimented diatoms, fish, or macrobenthos (Table 7-4). Tier 1 variables, including DO, chlorophyll a, and Secchi depth, are also critic components of the Tier 2A survey. Tier 2A may be built on either Tier 1A or 1B. Macrophytes are the easiest of these assemblages to identify and count in the field (using wet weight instead of relative abundance). Sedimented diatoms are also relatively easy to sample, although identification and enumeration must be done in the laboratory. The choice of which plant assemblage to sample clearly depends on the importance of the assemblage in lakes of the region - diatoms would be the choice in regions where macrophytes are minor components of the lake system.

The habitat components of the Tier 2A survey build on the desktop screening and Tier 1 habitat assessment and also include a semi-quantitative shore zone habitat evaluation (Table 5-3). Tier 2A requires estimates of shorezone land use, riparian vegetation, emergent macrophyte extent and cover, and floating macrophyte extent and cover at several transects from the shore.

The Tier 2A faunal component consists of the benthic macroinvertebrates. Macroinvertebrates are sampled from the sublittoral zone, below the floating macrophyte zone, yet above the thermocline to avoid sampling predominantly anoxic areas. Tier 2A sampling typically consists of a single visit during an index period. Benthic macroinvertebrates may optionally be sampled more frequently to obtain growing season averages. Macrophytes are best sampled mid- to late in the growing season when plant biomass is near its annual maximum. Sedimented diatoms, which represent sedimentation of at least a year or more, may be sampled at any time.

Tier 2A allows more precise detection and identification of problems and potential

causes than Tier 1, as well as detection of biological effects on the biotic assemblages selected for assessment.

7.3.1 Tier 2A: Transect Sampling

Establish Transects

Tier 2A sampling of macrophytes and benthic macroinvertebrates, and the shorezone habitat are surveyed along 3 to 10 transects perpendicular to the shoreline (Figure 7-4). Transects are the same as the Tier 1 macrophyte transects: the lake (or lake zone) shoreline is divided into equal length segments corresponding to the number of transects, and a transect start point is randomly selected in each segment.

7.3.2 Shorezone Measurements

Each transect is extended visually on the lake shorezone, and the condition of the shorezone is determined. Shorezone measurements include riparian vegetation cover estimates, lake bank substrate and erosion, and human modifications. Figure 7-5 is an example scoring sheet for habitat measurements showing how the variables are scored.

Lakeshore Habitat Measurements and Metrics			
Lake Name:	Date of Visit:	Visit #	
Lake ID:	Transect ID:		
Riparian Vegetation Measurements	Transect ID:		
Areal Coverage Categories : 0 = Absent, 1 = Sparse (< 10%), 2 = Moderate(10-40%), 3 = Heavy (40 to 75%), 4 = Very Heavy (>75%)			
Canopy (%) cover			
Understory (%) cover			
Ground Cover (%) cover			
Barren (%) cover			
Bank Measurement			
Rocky (%)			
Soil (%)			
Vegetated (%)			
Other (%)			
Bank Erosion Score (0-4): 0 = None, 4 = Severe			
Human Influence Measurements 0 = Absent, 1 = Present within Transect, 0.5 = Observed Adjacent to or Behind Transect			
Buildings			
In-Lake Structure			
Roads, Railroads			
Agriculture			
Lawn			
Dump or Landfill			

Figure 7-5. Example scoring sheet for shorezone habitat.

7.3.3 Aquatic Macrophytes

Tier 2A macrophyte sampling is more systematic and detailed than Tier 1. The objective is to obtain relative abundances of macrophyte taxa to develop assemblage measurements. Relative abundance can be estimated by stem counts (number of stems of each species) or biomass. Biomass is preferred because a stem does not correspond to an individual plant, and biomass is a good indicator of species dominance in the habitat. An alternative to relative abundance is scoring presence and absence of species in quadrat.

One to four macrophyte sampling locations are established on each transect within depth zones between shorezone emergent and the unvegetated, sublittoral bottom. For example, location may be identified in 0-1m depth, 1-2m, 2-3m, and 3-4m depth (Weber et al. 1995).

Stem counts - May be done with the transect method, by counting stems touching a line held on the transect. Stems may also be counted in quadrants, where all stems within a 1/4 m2 quadrat are counted and identified. Stem counts may require diving in water deeper than 1 m. One or more sampling stations (for quadrat sampling)

are selected on each transect between the emergent macrophyte zone and the deepest extent of submerged macrophytes.

Biomass Sampling - The easiest method to estimate macrophyte biomass is with an aquatic weed rake (Table 7-5). At each station on the transect, an aquatic weed rake or thatching rake is dragged a set distance (e.g., 1m) to sample vegetation (Trebitz et al. 1993). Plants from all stations on the lake are identified and sorted by species, and the total of each species collected is weighed (wet weight) to obtain estimates of biomass and proportion of biomass of each species. Algae mats and epiphytic growth on leaves and stems are described. Voucher specimens of each species should be kept for complete identification and for permanent record. Depth is sounded at the lakeward edge of submerged vegetation.

Table 7-5. Sampling summary for submerged macrophytes.

Habitat	Littoral zone.
Sampling Gear.	Tier 1: none Tier 2A double-headed rake on chain (Trebitz et al. 1993), or 1m^2 quadrats and diving gear.
Index Period.	Late summer. (Macrophytes are sampled once regardless of tiers.)
Sampling	Tier 1: Estimate of area covered by macrophytes. Tier 2A: 2-3 semiquantitative rake samples to determine relative biomass of species; on randomly placed transects perpendicular to shore. Alternative: 1-3 randomly tossed quadrats on each transect, then stem count and identification of each species in quadrat.
Analysis	Tier 1: Dominant species identifed, % estimated. Tier 2A: All species identified, relative abundance of each estimated from wet weight or stem count (Trebitz et al. 1993).

Aquatic weed rakes are biased against macrophytes that can slip through the tines of the rake. Therefore, a more accurate estimate of biomass would be to clip all plants in the quadrat for wet weight determination. Clip plots would require diving or snorkeling in water more than 1m deep. Biomass can be estimated more accurately by drying the sorted plant material for dry weight determination, at the cost of additional processing.

The weed rake and wet weight determination is likely to be the most cost-effective methodology for most purposes. Although it undersamples certain species, it is likely to be consistent enough to use for biological surveys, as long as the same sampling methodology is used in all lakes.

Presence-Absence - Instead of estimating biomass, species can be scored for presence or absence within quadrants (Weber et al. 1995). Each sampling location along a transect is divided into four quadrants. Each quadrat is sampled with the rake, and each species receives one point for every quadrat in which it occurs.

7.3.4 Macroinvertebrates

The macroinvertebrate assemblage beyond the macrophyte zone is sampled with gear appropriate to the bottom type and depth (e.g., Ponar, Ekman grab sampler, dome sampler); and the assemblage is identified and characterized (Table 7-6).

Table 7-6. Sampling summary for benthic macroinvertebrates.

Habitat	Preferred: sublittoral Alternative: profundal (if hypoxia is rare).
Sampling Gear	Regionally most appropriate for substrate (Table 7-8); 595mm mesh (No. 30 sieve).
Index Period	Regionally most appropriate. Preferred: Late summer (most stressful; most regions) Alternative: Early spring; winter (subtropical lakes).
Sampling	Lakewide composite samples of 2-3 grabs at each of 3-5 sublittoral sites (7 to 15 grabs total) or keep sites as replicates if an in-lake variance estimate will be used in assessment.
Analysis	Preferred: lowest practical taxonomic level, 100-organism subsample. Alternatives: more than 100 organisms

Sampling Period - Two sampling periods have been identified either the most stressful period (usually late summer) or a period after recruitment (usually early spring) but before major emergence of adult insects.

Sampling Location - Along transects, the sublittoral habitat is recommended as the most appropriate habitat for sampling due to its relatively stable nature.

Sampling Gear - The type of gear will depend on the substrate being sampled (Table 7-7). A standard mesh size of 595 mm (No. 30 mesh) is required.

Table 7-7. Benthic macroinvertebrate sampling gear appropriate for major substrate types.

Substrate	Gear Types
Submerged aquatic vegetation.	Dip net.
Rocks, gravel.	Diver operated dome sampler.
Sand	Peterson, Van Veen grabs.
Mud	Ponar, Ekman grabs.
Clay	Peterson, Van Veen grabs

Sample Replication - To characterize the macroinvertebrate assemblage, multiple grabs are taken from several sites. Each transect ends in a macroinvertebrate sample site, and two to three grabs are taken at each site. Grabs may be composited into a single composite sample.

Sample Processing - To process the sample, organisms are removed from sticks, rocks, and similar size objects. The remainder of the sample is placed in a tub and mixed into a fine, uniform slurry. After mixing, the slurry is sieved using a U.S. No. 30 sieve (595 um) to remove organic and mineral material. The benthic organisms are retained by the sieve, which can be emptied into a light-color, gridded sorting tray. Grid cells are selected at random and sorted until at least a 100-organism subsample has been counted and identified to the appropriate taxonomic level. The last grid cell is sorted completely until all organisms from the grid are identified to the lowest practical level. Further description of sorting is presented in EPA/440/4-89-001 (USEPA 1989b).

7.3.5 Fish Assemblage

Fish assemblages can be sampled by electrofishing in and/or beyond the macrophyte zone. Sampling effort for fish should be kept constant between transects. Electrofishing is generally the single most cost-effective sampling method for fish (Scott et al. 1992) but it is not effective in deep water. If deep water fish are an endpoint of concern, then gill nets, fish traps, or trawls can be used. A combination of nets and electrofishing often provide a more representative sample

of the fish assemblage; however, multiple methods translate to a substantial cost for field effort. A variety of nets may be used to sample littoral and sublittoral areas. Fish sampling methodologies are further outlined in EPA 600/R-92/111 (USEPA 1992b) and Table 7-8.

Table 7-8. Sampling summary for fish assemblage

Habitat	Littoral and sublittoral zones.
Sampling Gear	Boat electrofisher (for available microhabitats within shallow littoral areas). Experimental gill nets (extended for littoral to sublittoral zones).
Index Period	Regionally most appropriate. Preferred: Late summer - early fall. Alternative: Early spring; winter (subtropical lakes).
Sampling	Littoral electrofishing sample reach of shoreline at the end of each transect. All microhabitats sampled within each measured littoral reach. Experimental gill nets (five panel nets) set perpendicular to shore at the end of each transect, extending from littoral to sublittoral zones.
Analysis	Preferred: All specimens identified to species, enumerated, measured, weighed, and examined for incidence of external anomalies. Alternative: Abundant species (e.g., greater than 50 individuals per sample) may be subsampled, measured, weighed, and data extrapolated for the species total.

Case Study: Florida sampling methods

In 1995, FDEP adopted a new sampling protocol to obtain more representative samples of each lake, in part based on results from the earlier samples. Lakes greater than 1000 acres are divided into two or more basins, usually by separating at constriction points or between bathymetrically identifiable basins (Fig. 7-6). The 2-4m sublittoral zone of each lake basin is divided into 12 equal segments, and a grab is taken in each segment with a Petite Ponar or Ekman sampler (0.02m2) (Fig. 7-6). Positions of segments and sampling sites are estimated by eye in the field. The 12 grabs are combined into a single composite sample, which is randomly subsampled to a count of 100 organisms, identified to the lowest practical taxonomic level. Basins (in lakes greater than 1000 acres) are retained as separate sample units. Lakes smaller than 1000 acres are represented by a single 100-organism sample. A second grab sample is taken at each of the 12 stations for sediments, which are likewise combined into a single representative sample.

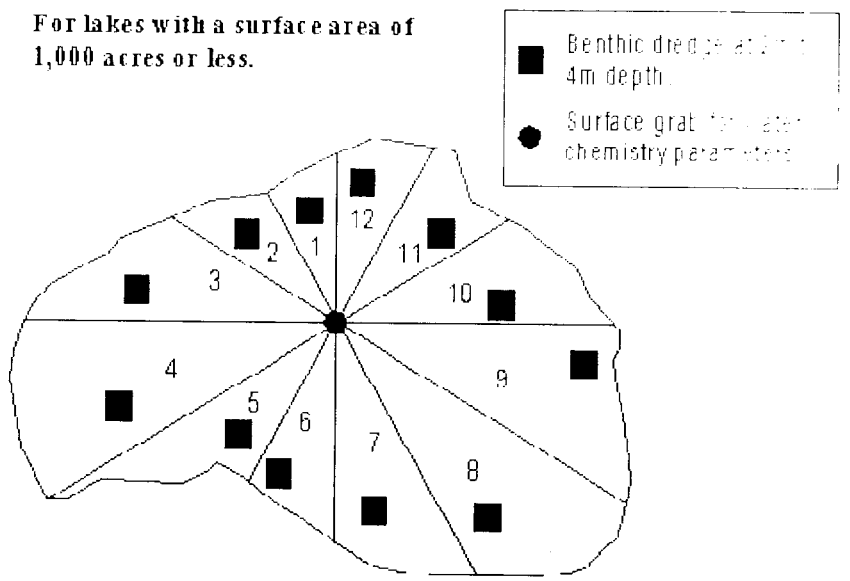

Figure 7-6. Florida lakes sampling scheme. (The lake is divided into 12 approximately equal segments. A Ponar grab is taken from each segment, at a random location in the 2 to 4 meter depth zone. Water chemistry, chlorophyll, and Secchi depth are measured from the center of the lake.)

In fixed organism subsampling, a targeted number of organisms (typically 100 to 500) is identified. If fixed organism subsampling for benthos is conducted in an unbiased manner using a random selection method, the resulting information on richness and relative abundance is comparable among samples. For benthic samples, the targeted number is reached by randomly choosing several fractions or "grids" from a pan; all organisms enclosed within the grids are sorted to avoid bias toward large and easily seen individuals. Ideally, several (four or more) grids are sorted to ensure proper representation.

Surface and bottom water chemistry samples, and phytoplankton samples, are taken near the center of each lake. Observations included field measurements and laboratory analyses, and identification of phytoplankton to genus.

Case Study: TVA Benthic Macroinvertebrates Collection Methods

Benthic macroinvertebrate assemblage samples were collected in the spring (March and April) at 69 locations on 30 TVA reservoirs. Sample locations were selected in each of the forebay, mid-reservoir, and inflow areas, corresponding to lacustrine, transitional, and marine conditions, respectively (Figure 7-3). At each sample location, a line-of-sight transect was established across the width of the reservoir, and one Ponar grab sample collected at 10 equally spaced locations along this transect. When rocky substrates were encountered, a Peterson dredge was used. Care was taken to collect samples only from the permanently wetted bottom portion of the reservoir (i.e., below the elevation of the minimum winter pool level). Samples were washed in the field, transferred to a labeled collection jar, and fixed

with 10 percent buffered formalin solution. Samples were sorted and identified in the field, to the lowest practical taxon, typically genus, and reported as number per square meter.

To assess the reproducibility of benthic macroin-vertebrate sampling results, replicate samples were collected at 13 of the 69 sampling locations in 1994, with all types of reservoir locations (i.e., forebay, transition zone, embayment and inflow) included. At each of the replicate sampling locations, the sampling protocol involved collection of a first set of 10 samples, leaving the sampling location, and then returning as near as possible to the original transect site (on the same day) and repeating the collection of a second (replicate) set of 10 samples. Results from sets of replicate samples were evaluated for reproducibility.

Sampling Procedures

Electrofishing - Multiple habitats are selected in littoral areas for electrofishing. Habitat distinctions are based on substrate (e.g., rocks, sand, clay) and on available cover (e.g., vegetation, woody debris).

Nets - A variety of nets are used to sample littoral and sublittoral areas. It is recommended that trapping nets (gill nets, trammel nets, fyke nets, trapnets) be set for 2 to 5 days with collection once or twice a day.

- Gill nets or trammel nets are set in littoral areas, perpendicular to shore, and usually extend into sublittoral areas. To reduce size selectivity, an experimental gill net consisting of panels of five different mesh sizes is commonly used. Smaller mesh size (0.5in) is used in shallow areas and up to 2-2.5in mesh farther out.
- Fyke nets, trap nets, and fish traps can be used in shallow areas.
- Trawl and sonar can be used to sample pelagic areas.

Sample Processing - Fish samples are processed as recommended in the RBP manual EPA 440/4-89-001 (USEPA 1989b). Sampling duration and area or distance sampled are recorded in order to determine level of effort. Specimens are identified to species, then total numbers and weights, and the incidence of external anomalies is recorded for each. Voucher specimens of each species from each site are preserved in a 10 percent formalin solution, in a labeled jar. The voucher collections are placed with the state ichthyological museum to confirm identifications and to constitute a biological record. This is especially important for uncommon species, for species requiring verification of identification, and for documentation of new distribution records. If kept in a live well, most fish can be identified and counted in the field by trained personnel and returned to the lake alive. Additional information on field methods is presented in Karr et al. (1986) and EPA 600/R-92/111 (1992b).

Case Study TVA Fish Collection Methods

Shoreline electrofishing samples were collected during daylight hours from inflow, transition, and five forebay zones of most reservoirs from September to mid-November (Figure 7-3). Only one or two zones were sampled on reservoirs where zones were indistinguishable. No inflow zones were sampled in tributary reservoirs. A total of 15 electrofishing transects, each covering 300m of shoreline, was collected from each of the sampled zones.

	Component	Data Collection	Responds to or Indicator of
Habitat Components	1. Watershed land use, population, NPDES	Tier 0 habitat	
	2. Lake physical	Tier 1 habitat	
	3. Shoreline habitat assessment	3-10 transects: - land use - bank stability - riparian vegetation - emergent vegetation	
	4. Water quality DO seasonal or annual mean, % depth-time Mean pH, alkalinity Secchi depth	Tier 1B water quality (seasonal average).	Trophic state, turbidity.
Biological Components	5. Algal chlorophyll *a*	Tier 1B chlorophyll (seasonal average).	Trophic state.
	6, 7. Assemblages (minimum 2):		
	a. Phytoplankton	Surface samples (0.5 m) or integrated samples (hose) identify to genus; count 100-500 cells.	Trophic state acidity, metals, water column toxicity.
	b. Zooplankton	Vertical tows; identify to genus; count 100-200 organisms, measure cladocerans.	Trophic state, contamination, trophic imbalance.
	c. Periphyton		

7.4.1 Phytoplankton

Phytoplankton are subsampled from the same water sample collected for chlorophyll and nutrients in the Tier 1 sampling protocol. The water sample may be a surface sample or an epilimnion or photic zone hose sample. The large sample is mixed thoroughly before subsamples are taken from it.

A sample of 150 to 500ml is sufficient for phytoplankton. The phytoplankton sample is preserved in the field with Lugol's solution (APHA 1992). Cells are identified and counted using the Utermohl method on an inverted microscope, or by filtration onto a membrane filter (APHA 1992). The Utermohl method requires settling chambers and an inverted microscope, and the filter method requires a compound microscope and filtering apparatus.

7.4.2 Zooplankton

Sampling Procedure - Zooplankton are sampled with a vertical tow at the same sites as phytoplankton, trophic state, and water quality (Table 7-11). Nets of 118mm mesh and 30 cm diameter will sample most crustacean zooplankton. The net should be equipped with a cone to prevent spill and escape of active organisms. Zooplankton are anesthetized with carbonated water, and preserved in 4 percent formaldehyde. After fixing, long-term storage should be in 70 percent ethanol.

Table 7-11. Sampling summary for crustacean zooplankton.

Habitat	Open water, 1 to 5 sites in lake
Sampling Gear	Plankton net, 300mm (12in) mouth, 118mm mesh
Index Period	Mid-summer index.
Sampling	Single vertical tow through water column from 0.5m above bottom to surface
Analysis	Tier 1: identify to species, measure *Daphnia*, 100 to 200 organisms

Analysis - The sample is split until 100 to 200 organisms remain in the subsample. Zooplankton are identified to genus; equipment includes dissecting microscope and keys. Lengths of Daphnia are recorded.

7.4.3 Periphyton

Periphyton should be sampled several times during the growing season: certain species might be dominant depending on the time of year. Field methods are outlined below and summarized in Table 7-12 (after Bahls 1993).

Table 7-12. Sampling summary for periphytic diatoms.

Habitat	Rock, wood, silt, macrophyte substrates, 0.5 to 1 m depth (wading depth).
Sampling Gear	Spatula, toothbrush for scraping cells from substrates, eyedropper or spoon for lifting (Bahls 1993). Samples preserved in Lugol's solution.
Index Period	Preferred: mid-summer Alternative: growing season, average of 7 to 10 samples
Sampling	3-5 substrates (rock, wood, sand, mud, macrophytes) are sampled in the proportion of their occurrence at 3-5 sites around the lake. Single composite sample from all substrates and sites.
Analysis	300-500 diatom frustules are identified to species and enumerated.

Sampling Location - A minimum of two random sampling points along each transect is suggested; a determination of greater sampling effort should be based on lake size and professional judgment.

Sample Collection - Collection can be from natural or artificial substrates depending on the preference of the investigation team or agencies. Natural substrates include rocks, logs, macrophytes, and mud. A composite sample of three to five substrates (e.g., fist-sized rocks) is obtained from each sample site. The area scraped from each substrate should be approximately equal. Use a pocket-knife or similar tool for scraping solid substrates. A spoon or large-bore eyedropper can be used for lifting microalgae from mud or silt substrates. Macroalgae can be picked by hand. Epiphytic algae can be dislodged from macroalgae, moss, and aquatic macrophytes by placing a portion of the higher plant in the sample container and shaking vigorously. The moss or macrophyte is then removed and discarded (Bahls 1993).

Sample Preservation - Preserve samples in watertight, unbreakable jars. Water is added from the sample site to cover the sample; then enough Lugol's solution is added to impart a reddish-brown tint. Artificial substrates can be preserved intact in a suitable container or scraped in the field.

Sample Preparation - Extracellular organic matter is decomposed by oxidation, leaving only the diatom shells (frustules) as described in APHA (1992). Using the cleaned diatoms (frustules), a permanent mount is prepared and a proportional count is made of 300 to 500 cells (APHA 1992). Counts for each species are divided by the total count and multiplied by 100 to obtain percent relative abundance (PRA).

7.5 Diagnostic Habitat Survey

More detailed habitat procedures allow monitoring agencies to focus on specific water and sediment quality problems in a lake, and specific land use practices in the watershed, for identification of probable cause of impairment (Table 7-13). Supplemental habitat components may include: a detailed watershed assessment (soils and geology, detailed land use, agricultural practices); a stream assessment for migratory fish habitat; additional water quality analysis (nutrients, contaminants); and sediment quality (sediment grain size, sediment organic carbon, contaminants, toxicity).

Table 7-13. Supplemental components.

Component	Data Collection	Responds to or Indicator of
1. Watershed - Soil and bedrock characteristics - Hydrology - Agricultural practices - Detailed land use categories (roads, mines, impervious surface, cropland, pasture, etc.)	Maps; survey of state and county agencies.	Physical classification. Probable cause.
2. Shore - Migrating fish spawning habitat	Tributary stream habitat survey.	Disturbance, habitat destruction.
3. Sediment quality - Toxicity, contaminants, total organic carbon, particle size	Annual grab in depositional environment (deepest point)	Exposure to toxics, contaminants

Tiers 2A and 2B will allow detection of effects of toxic substances on the respective biological assemblages, but will not provide positive identification of toxicity as a probable cause of impairment. Positive identification of contamination and toxicity as a probable cause will require the supplemental survey, particularly habitat contaminant analysis and toxicity assays. The detailed land use measurements in the habitat assessment allow identification of more specific nonpoint source probable causes of impairment. The tiers allow detection of biological effects on at least two assemblages, and hence detection of effects at multiple levels (including cascades of effects).

7.5.1 Watershed and Shorezone Components

The diagnostic habitat survey is similar to the Tier 1 and Tier 2 habitat survey but evaluates more detailed components. In searching for probable causes of impairment, land use is broken down into more detailed land use categories, including high- and low-density residential, industrial and commercial transportation, cropland, pasture, orchard, mines, etc. If agriculture is thought to contribute to impairment, then the dominant agricultural practices should be documented, as well as their distribution in the watershed. If the fish assemblage shows impairment (particularly migratory fish), then fish spawning habitat in inflowing streams can be evaluated.

7.5.2 Sediment Analyses

The Sediment Classification Methods Compendium (USEPA 1992f) discusses various aspects of sediment analyses including sample collection and handling, quality assurance/quality control issues, and toxicity testing. In addition, this guide furnishes references for specific methods.

Sampling

There are three main types of devices used to collect sediment samples. The choice of sampler to be used for a particular study depends upon the nature of the sample needed. Grab samplers and core samplers can be used in toxicity testing and in evaluating chemical and physical properties of the sediment. Additionally, cores can be used in evaluating historical sediment records.

Equipment should be thoroughly cleaned between samples to prevent cross contamination. In some cases, preservation methods such as pH control or addition of chemical preservatives will need to be done. Standard methods for sample handling can be found in ASTM (1990).

Sediment Particle Size

Sediment particle size is measured using stacks of different sized sieves. The sediment to be analyzed is first heated to dryness. Samples may need to be stored cold, frozen, or preserved. Then a known weight of dried sediment is poured into a stack of sieves of different sizes to separate the particles. Each size fraction is then weighed and expressed as a percentage of the total dry sample weight.

Sediment Contamination

Chemical analyses that can be measured include metals, polyaromatic hydrocarbons (PAHs), polychlorinated biphenyls (PCBs), pesticides, and volatile and semivolatile organic pollutants. Metals are typically measured using atomic absorption spectrophotometry. Other constituents should be analyzed using USEPA approved methods (USEPA l991f, ASTM 1990). Although it is not a contaminant, total organic content (TOC) should also be analyzed since it is an important indicator of the bioavailability of nonionic hydrophobic organic pollutants. Likewise, acid volatile sulfides (AVS) are important in determining the bioavailability of metals.

Sediment Toxicity Evaluation

Several approaches are recognized by USEPA for evaluating sediment toxicity. These approaches may be used separately or in combination to provide evidence of toxicity and to generate sediment quality criteria. (USEPA 1994).

Whole (bulk) sediment toxicity testing is a method of evaluating the level of toxicity of a sediment sample. Typically, test organisms are exposed to sediment for 10 to 14 days. Endpoints used are growth and survival. The most often used organisms in freshwater sediment toxicity tests are the amphipod Hyalella azteca and larvae of the midge Chironomus tentans. Other organisms that have been tested include other benthic infauna such as the mayfly Hexagenia spp; and the worms Tubifex tubifex and Lumbriculus variegatus; and two cladocerans, Daphnia magna and Ceriodaphnia dubia. Results of exposure to contaminated sediments is compared with control (uncontaminated) sediments (USEPA 1994j, ASTM 1998, PSEP 1995, Environment Canada 1994).

Home ~ Preface ~ Chapter 1 ~ Chapter 2
Chapter 3 ~ Chapter 4 ~ Chapter 5 ~ Chapter 6
Chapter 7 ~ Chapter 8 ~ Chapter 9 ~ Chapter 10
Appendix A ~ Appendix B ~ Appendix C ~ Appendix D
Appendix E ~ Appendix F ~ Appendix G

Top of Page

EPA Home | Privacy and Security Notice | Contact Us

Last updated on Tuesday, September 9th, 2003
URL: http://www.epa.gov/owowwtr1/monitoring/tech/chap07.html