FINAL REPORT
ON
THE STUDY OF FABRICATION, INSTALLATION AND COST ESTIMATION
FOR
THE NEW LOCK GATES OF THE PANAMA CANAL

JANUARY, 2004

THE STUDY TEAM

for

Japan Bank for International Cooperation (JBIC)

Table of Contents

Table of Contents

	Page
1. Introduction	1-1
1.1Socio-Econemic Aspect	1-1
1.2 Scope of the Study	1-6
2. Premises of the Study	2-1
2.1 Conceptual Design of New Lock Gate Project	2-1
2.2 Study Procedure	2-15
2.3 Precondition of the Study	2-21
3. Research of Panamanian Vender's Capabilities	3-1
3.1 Panamanian Vender's Capabilities	3-2
4. Construction Method of the New Lock Gates	4-1
4.1 Miter Gate	4-1
4.2 Rolling Gate	4-7
5. Fabrication Method	5-1
5.1 Miter Gate	5-6
5.2 Rolling Gate	5-20
5.3 Evaluation of Fabrication Methods	5-35
6. Transportation Method	6-1
6.1 Miter Gate	6-5
6.2 Rolling Gate	6-10
6.3 Evaluation of Transportation Methods	6-
7. Installation method	7-1
7.1 Miter Gate	7-3
7.2 Rolling Gate	7-27
7.3 Manpower and Major Equipment	7-50
7.4 Assembling Method of Gate Leaf in Dry Dock in Panama	7-53
7.5 Evaluation Summary of Study of Installation Methods	7-60

8. Technical Evaluation of Miter Gate and Rolling Gate 8-1
8.1 Technical Evaluation Summary of Study case 8-1
8.2 Technical Evaluation of Construction Schedule 8-3
8.3 Formation of Construction 8-22

9. Cost Estimates for New Lock Gates 9-1
9.1 Initial Cost Estimates of Miter Gate 9-1
9.2 Initial Cost Estimates of Rolling Gate 9-5
9.3 Life Cycle Cost Comparative of New Lock Gate 9-10

10. Comprehensive Comparison 10-1

11. Maintenance Procedure 11-1
11.1 Miter Gate 11-1
11.2 Rolling Gate 11-4

12. Social and Environmental Consideration 12-1
12.1 Introduction 12-1
12.2 Circumstances for the Project and Expected Range of Impact on Social Aspect 12-1
12.3 Environmental Law 12-2
12.4 Environmental Researches and Countermeasures conducted by ACP 12-4

13. Indicative Terms and Conditions for the JBIC Buyer Credit Facility 13-1

Appendix

FINAL REPORT OF
FABRICATION, INSTALLATION, AND COST ESTIMATES FOR THE NEW LOCK GATES OF THE PANAMA CANAL

Index of the Tables

Chapter 2

Table 2.1-1 Concept Design Data of the New Locks
Table 2.1-2 Total Weight List of Miter Gate, 2-Lift
Table 2.1-3 Total Weight List of Miter Gate, 3-Llift
Table 2.1-4 Total Weight List of Rolling Gate, 2-Lift
Table 2.1-5 Total Weight List of Rolling Gate, 3-Lift
Table 2.3.5-1 Tolerance of Gate Leaf for Miter Gate
Table 2.3.5-2 Tolerance of Gate Leaf for Rolling Gate
Table 2.3.4-1 40 feet Dry Container Normal Size (8'-6")
Table 2.3.4-2 40 feet Dry Container High Cube Size (9'-6")

Chapter 3

Table 3.1.-1 Research of Panamanian Vender's abilities

Chapter 4

Table 4.1.1 Study Cases for Miter Gate
Table 4.2.1 Study Cases of Rolling Gate

Chapter 5

Table 5-1 Study Cases of Miter Gate
Table 5-2 Study Cases of Rolling Gate

Chapter 6

Table 6-1 Study Cases of Miter Gate
Table 6-2 Study Cases of Rolling Gate
Table 6-3 Miter Gate Transportation Conditions
Table 6-4 Rolling Gate Transportation Conditions
Table 6.1.1-1 Details of shipping Method
Table 6.1.2-1 Miter Gate Packing List for Block Unit Transport
Table 6.1.2-2 Packing List for Block Transportation, Miter Gate, 2-Lift
Table 6.2.1-1 Draft of Rolling Gates
Table 6.2.1-2 Details of shipping Method for Rolling Gate

Table 6.2.2-1 Rolling Gate Packing List for Block Unit Transport
Table 6.2.2-2 Packing List for Block Transportation, Rolling Gate, 2-Lift

Chapter 7

Table 7-1 Study Cases of Miter Gates
Table 7-2 Study Cases of Rolling Gates
Table 7.1.1-1 Precondition for Installing Miter Gate, Study Case(Ⅰ)
Table 7.1.1-2 Installation Procedure, Miter Gate, Study Case(Ⅰ)
Table 7.1.1-3 Major Equipment List, Miter Gate, Study Case(Ⅰ)
Table 7.1.1-4 Construction Schedule of Miter Gate, 2-Lift Study Case (Ⅰ)
Table 7.1.1-5 Construction Schedule of Miter Gate, 3-Lift Study Case (Ⅰ)
Table 7.1.2-1 Precondition for Installing Miter Gate, Study Case(Ⅱ)
Table 7.1.2-2 Installation Procedure, Miter Gate, Study Case(Ⅱ)
Table 7.1.2-3 Major Equipment List, Miter Gate, Study Case(Ⅱ)
Table 7.1.2-4 Construction Schedule of Miter Gate, 2-Lift Study Case (Ⅱ)
Table 7.1.2-5 Construction Schedule of Miter Gate, 3-Lift Study Case (Ⅱ)
Table 7.1.3-1 Precondition for Installing Miter Gate, Study Case(Ⅲ)
Table 7.1.3-2 Installation Procedure, Miter Gate, Study Case(Ⅲ)
Table 7.1.3-3 Major Equipment List, Miter Gate, Study Case(Ⅲ)
Table 7.1.3-4 Construction Schedule of Miter Gate, 2-Lift Study Case (Ⅲ)
Table 7.1.3-5 Construction Schedule of Miter Gate, 3-Lift Study Case (Ⅲ)
Table 7.2.1-1 Precondition for Installing Rolling Gate, Study Case(Ⅰ)
Table 7.2.1-2 Installation Procedure, Rolling Gate, Study Case(Ⅰ)
Table 7.2.1-3 Major Equipment List, Rolling Gate, Study Case(Ⅰ)
Table 7.2.1-4 Construction Schedule of Rolling Gate, 2-Lift Study Case (Ⅰ)
Table 7.2.1-5 Construction Schedule of Rolling Gate, 3-Lift Study Case (Ⅰ)
Table 7.2.2-1 Precondition for Installing Rolling Gate, Study Case(Ⅱ)
Table 7.2.2-2 Installation Procedure, Rolling Gate, Study Case(Ⅱ)
Table 7.2.2-3 Major Equipment List, Rolling Gate, Study Case(Ⅱ)
Table 7.2.2-4 Construction Schedule of Rolling Gate, 2-Lift Study Case (Ⅱ)
Table 7.2.2-5 Construction Schedule of Rolling Gate, 3-Lift Study Case (Ⅱ)
Table 7.2.3-1 Precondition for Installing Rolling Gate, Study Case(Ⅲ)
Table 7.2.3-2 Installation Procedure, Rolling Gate, Study Case(Ⅲ)
Table 7.2.3-3 Major Equipment List, Rolling Gate, Study Case(Ⅲ)
Table 7.2.3-4 Construction Schedule of Rolling Gate, 2-Lift Study Case (Ⅲ)
Table 7.2.3-5 Construction Schedule of Rolling Gate, 3-Lift Study Case (Ⅲ)
Table 7.3.1 Summary of Manpower in Cases of 2-Lift Gate Leaves
Table 7.3.2 Summary of Manpower in Cases of 3-Lift Gate Leaves
Table 7.3.3 Summary of Major Equipment in Cases of 2-Lift Gate Leaves

Table 7.3.4 Summary of Major Equipment in Cases of 3-Lift Gate Leaves
Table 7.4.1 Concept Design of Height of Gates in the Post-Panamax Locks
Table 7.4.2 Profile of the Dry Dock being Possessed on the Atlantic Ocean Side by ACP Industrial Shipyard
Table 7.4.3 Presumable Necessary Draft for Rolling Gate
Table 7.4.4 Profile of the Dry Dock being Possessed on the Pacific Ocean Side by Braswell Shipyard
Table 7.5.1 Evaluation of Installation Methods

Chapter 8

Table 8.1-1 Technical Evaluation of Study Cases for Miter Gate
Table 8.1-2 Technical Evaluation of Study Cases for Rolling Gate
Table 8.2.1-1 Construction Schedule Miter Gate, 2-Lift of Study Case (I)
Table 8.2.1-2 Construction Schedule Miter Gate, 2-Lift of Study Case (II)
Table 8.2.1-3 Construction Schedule Miter Gate, 2-Lift of Study Case (III)
Table 8.2.1-4 Construction Schedule Miter Gate, 3-Lift of Study Case (I)
Table 8.2.1-5 Construction Schedule Miter Gate, 3-Lift of Study Case (II)
Table 8.2.1-6 Construction Schedule Miter Gate, 3-Lift of Study Case (III)
Table 8.2.2-1 Construction Schedule Rolling Gate, 2-Lift of Study Case (I)
Table 8.2.2-2 Construction Schedule Rolling Gate, 2-Lift of Study Case (II)
Table 8.2.2-3 Construction Schedule Rolling Gate, 2-Lift of Study Case (III)
Table 8.2.2-4 Construction Schedule Rolling Gate, 3-Lift of Study Case (I)
Table 8.2.2-5 Construction Schedule Rolling Gate, 3-Lift of Study Case (II)
Table 8.2.2-6 Construction Schedule Rolling Gate, 3-Lift of Study Case (III)
Table 8.2.3-1 Construction period Evaluation of Study Cases
Table 8.3.1-1 Scheme of New Lock Construction Project
Table 8.3.2-2 Research of Latin American Vender's Abilities
Table 8.3.2-3 Scheme of New Lock Construction Project

Chapter 9

Table 9.1-1 Comparison Table of Cost Estimate for Miter Gate
Table 9.2-1 Comparison Table of Cost Estimate for Rolling Gate

Chapter 10

Table 10.1-1 Evaluation of Study Cases for the Miter Gate
Table 10.1-2 Evaluation of Study Cases for Rolling Gate

Chapter 11

Table 11.1.1-1 Standard Renewal Frequencies of Miter Gate Units

Table 11.2.1-1 Standard Renewal Frequencies of Rolling Gate Units

Appendix B

Fig.B.1 Latin American Vender's Fabrication Cost Estimate

Index of Lists and Figures

Index of Figures

Chapter 2

Fig.2.1-1 Panama Canal: Probable Alignment on the Atlantic
Fig.2.1-2 Panama Canal: Probable Alignment on Pacific Side
Fig.2.1-3 Panama Canal: Gate Image (Miter Gate)
Fig.2.1-4 Bird View of Miter Gate (3-Lift)
Fig.2.1-5 General Plan of Miter Gate (M-D3d)
Fig.2.1-6 Panama Canal: Gate Image (Rolling Gate)
Fig.2.1-7 Bird View of Miter Gate (3-Lift)
Fig.2.1-8 General Plan of Rolling Gate (R-D3d)
Fig 2.1-9 Aggregate Weight List of All Gates for the New Locks
Fig.2.2-1 Flow Chart of General Work Plan
Fig2.2-2 Flow Chart of the Selection of Installation Methods
Fig2.2-3-1 Flow Chart of Detailed Work Plan
Fig2.2-3-2 Flow Chart of Detailed Work Plan
Fig2.2-3-3 Flow Chart of Detailed Work Plan
Fig2.2-3-4 Flow Chart of Detailed Work Plan

Chapter 4

Fig.4.1.1 Construction Flow for Miter Gate
Fig.4.1.2 General Flow Chart for Study Case (I)
Fig.4.1.3 General Flow Chart of Study Case (II)
Fig.4.1.4 General Flow Chart for Study Case (III)
Fig.4.2.1 Construction Flow for Rolling Gate
Fig.4.2.2 General Flow Chart for Study Case (I)
Fig.4.2.3 General Flow Chart for Study Case (II)
Fig.4.2.4 General Flow Chart for Study Case (III)

Chapter 5

Fig.5.1.1-1 Block Division Plan for Miter Gate, One-unit Fabrication
Fig.5.1.1-2 Miter Gate, One-unit Fabrication, Flow Chart No.1
Fig.5.1.1-3 Miter Gate, One-unit Fabrication, Flow Chart No.2
Fig.5.1.1-4 Miter Gate, One-unit Fabrication, Flow Chart No.3
Fig.5.1.1-5 Miter Gate, Block Fabrication Schedule (Miter Gate, One-unit Fabrication, Study Case (I))
Fig.5.1.3-1 Block Division Plan for Miter Gate, Block Fabrication
Fig.5.1.3-2 Miter Gate, Block Flow Chart No.1
Fig.5.1.3-3 Miter Gate, Block Fabrication, Flow Chart No.2

Fig.5.1.3-4 Miter Gate, Block Fabrication, Flow Chart No.3
Fig.5.1.3-5 Miter Gate, Block Fabrication Schedule (Miter Gate, Block Fabrication, Study Case (II) & (III))
Fig.5.2.1-1 Block Division Plan for Rolling Gate, One-unit Fabrication
Fig.5.2.1-2 Rolling Gate, One-unit Fabrication, Flow Chart No.1
Fig.5.2.1-3 Rolling Gate, One-unit Fabrication, Flow Chart No.2
Fig.5.2.1-4 Rolling Gate, One-unit Fabrication, Flow Chart No.3
Fig.5.2.1-5 Rolling Gate, One-unit Fabrication, Flow Chart No.4
Fig.5.2.1-6 Rolling Gate, One-unit Fabrication, Flow Chart No.5
Fig.5.2.1-7 Rolling Gate, One-unit Fabrication, Flow Chart No.6
Fig.5.2.1-8 Rolling Gate, Block Fabrication Schedule (Rolling Gate, One-unit Fabrication, Study Case (I))
Fig.5.2.3-1 Block Division Plan for Rolling Gate, Block Fabrication
Fig.5.2.3-2 Rolling Gate, Block Fabrication, Flow Chart No.1
Fig.5.2.3-3 Rolling Gate, Block Fabrication Schedule (Rolling Gate, Block Fabrication, Study Case (II) & (III))

Chapter 6

Fig.6.1.1-1 The Transportation Flow of Miter Gate in One-unit Transport
Fig.6.1.1-2 Floating Crane SURUGA(駿河) (2,200 Tons Class)
Fig.6.1.1-3 Semi-Submersible Vessel (1), SWAN
Fig.6.1.1-4 Semi-Submersible Vessel (2), Mighty Servant 3
Fig.6.1.1-5 Stowage Proposal of 3-Lift Miter Gate for One-unit Transportation, 1st Ship
Fig.6.1.1-6 Stowage Proposal of 3-Lift Miter Gate for One-unit Transportation, 2nd Ship
Fig.6.1.1-7 Stowage Proposal of 3-Lift Miter Gate for One-unit Transportation, 3rd Ship
Fig.6.1.1-8 Stowage Proposal of 3-Lift Miter Gate for One-unit Transportation, 4th Ship
Fig.6.1.1-9 Stowage Proposal of 2-Lift Miter Gate for One-unit Transportation, 1st Ship
Fig.6.1.1-10 Stowage Proposal of 2-Lift Miter Gate for One-unit Transportation, 2nd Ship
Fig.6.1.1-11 Stowage Proposal of 2-Lift Miter Gate for One-unit Transportation, 3rd Ship
Fig.6.1.1-12 Miter Gate Transportation Schedule (One-unit Fabrication, Miter Gate, Study Case (I))
Fig.6.1.2-1 The Transportation Flow of Miter Gate in Block Transport

Fig.6.1.2-2 A vessel with Deck Cranes for Block Transportation
Fig.6.1.2-3 Miter Gate, Transportation Schedule (Block Fabrication, Miter Gate, Study Case (II) & (III))
Fig.6.2.1-1 The Transportation Flow of Rolling Gate in One-unit Transport
Fig.6.2.1-2 Floating Crane MUSASHI(武蔵) (3,600 Tons Class)
Fig.6.2.1-3 Drafts of Rolling Gates
Fig.6.2.1-4 Stowage Proposal of 3-Lift Rolling Gate for One-unit Transportation, 1st Ship
Fig.6.2.1-5 Stowage Proposal of 3-Lift Rolling Gate for One-unit Transportation, 2nd Ship
Fig.6.2.1-6 Stowage Proposal of 3-Lift Rolling Gate for One-unit Transportation, 3rd Ship
Fig.6.2.1-7 Stowage Proposal of 3-Lift Rolling Gate for One-unit Transportation, 4th Ship
Fig.6.2.1-8 Stowage Proposal of 2-Lift Rolling Gate for One-unit Transportation, 1st Ship
Fig.6.2.1-9 Stowage Proposal of 2-Lift Rolling Gate for One-unit Transportation, 2nd Ship
Fig.6.2.1-10 Stowage Proposal of 2-Lift Rolling Gate for One-unit Transportation, 3rd Ship
Fig.6.2.1-11 Rolling Gate Transportation Schedule (One-unit Fabrication, Rolling Gate, Study Case (I))
Fig.6.2.2-1 The Transportation Flow of Rolling Gate in Block Transport
Fig.6.2.2-2 Rolling Gate Transportation Schedule (Block Fabrication, Rolling Gate, Study Case (II) & (III))

Chapter 7

Fig.7.1.1-1 Installation Flow Chart, Miter Gate, Study Case(Ⅰ)
Fig.7.1.1-2 Installation Step Diagram, Miter Gate, Study Case (Ⅰ)
Fig.7.1.2-1 Installation Flow Chart, Miter Gate, Study Case(Ⅱ)
Fig.7.1.2-2 Installation Step Diagram, Miter Gate, Study Case (Ⅱ)
Fig.7.1.3-1 Installation Flow Chart, Miter Gate, Study Case(Ⅲ)
Fig.7.1.3-2 Installation Step Diagram, Miter Gate, Study Case (Ⅲ)
Fig.7.2.1-1 Installation Flow Chart, Rolling Gate, Study Case(Ⅰ)
Fig.7.2.1-2 Installation Step Diagram, Rolling Gate, Study Case (Ⅰ)
Fig.7.2.2-1 Installation Flow Chart, Rolling Gate, Study Case(Ⅱ)
Fig.7.2.2-2 Installation Step Diagram, Rolling Gate, Study Case (Ⅱ)
Fig.7.2.3-1 Installation Flow Chart, Rolling Gate, Study Case(Ⅲ)
Fig.7.2.3-2 Installation Step Diagram, Rolling Gate, Study Case (Ⅲ)

Fig.7.4.1 Assembled Condition of Miter Gate
Fig.7.4.2 Miter Gate: Fabrication of Gate Leaf in Dock Yard
Fig.7.4.3 Assembled Condition of Rolling Gate
Fig.7.4.4 Rolling Gate: Fabrication of Gate Leaf in Dock Yard

Chapter 8

Fig.8.2.1-1 Construction Schedule of Miter Gate (1Set)
Fig.8.2.1-2 Total Construction Schedule of Miter Gate
Fig.8.2.2-1 Construction Schedule of Rolling Gate (1Set)
Fig.8.2.2-2 Total Construction Schedule of Rolling Gate

Chapter 9

Fig. 9.1-1 Comparison Table of Cost Estimate for 2-Lift Type Miter Gate
Fig.9.1-2 Comparison Table of Cost Estimate for 3-Lift Type Miter Gate
Fig.9.1-3 Comparison Table of Cost Estimate for 2,3-Lift Type Miter Gate
Fig.9.2-1 Comparison Table of Cost Estimate for 2-Lift Type Rolling Gate
Fig.9.2-2 Comparison Table of Cost Estimate for 3-Lift Type Rolling Gate
Fig.9.2-3 Comparison Table of Cost Estimate for 2,3-Lift Type Rolling Gate
Fig.9.3-1 Life Cycle Cost Estimate of 2-Lift type Miter Gates
Fig.9.3-2 Life Cycle Cost Estimate of 3-Lift type Miter Gates
Fig.9.3-3 Life Cycle Cost Estimate of 2-Lift type Rolling Gates
Fig.9.3-4 Life Cycle Cost Estimate of 3-Lift type Rolling Gates
Fig.9.3.5 Life Cycle Cost Estimate of The New Lock Gates (2-lift)
Fig.9.3.6 Life Cycle Cost Estimate of the New Lock Gates (3-lift)
Fig.9.3.6 Life Cycle Cost Estimate of the New Lock Gates (3-lift)
Fig.9.3.7 Comparison Graph for Life Cycle Cost Estimate of the New Lock Gates

Chapter 11

Fig.11.1.1-1 Carry-out Procedure of the Gate Leaf
Fig.11.2.1-1 Hoisting Procedure of the Bulkhead Gate (Stop Log)
Fig.11.2.1-2 Carry-out Procedure of the Gate Leaf.

Appendix A

Fig.A.3-1 Miter Gate System Configuration
Fig.A.3-2 Rolling Gate System Configuration

1. Introduction

Chapter 1. Introduction

1.1 Socio-Economic Aspects

1.1.1 Outline History

Panama has long been taking unique roles in the world history since the 16th century for her geographic position. Since the exploration alongside the coast of the Isthmus of Panama by a Spanish explorer, Christopher Columbus, Panama had been the forward base of the Spanish Empire for the colonial operation in the South American continent until the middle of the 17th century.

In the 19th century, the European Great Powers had started promoting the projects of interoceanic canals in the Isthmus of Panama. In the middle of 19th century, the Panama Railroad was built in order to satisfy the increased transportation demands of peoples and the commodities to the West of the United States inspired by the 'Gold Rush' in California.

In 1890, Ferdinand de Lesseps, a French designer and the builder of the Suez Canal, started the construction of the Panama Canal. The project was ultimately abandoned after almost 8 years of construction. Because of the faulty design (sea level canal method), and the lack of countermeasures to prevent the workers from being suffered from the tropical diseases resulted huge human victims. Most of the workers were immigrants from European and Caribbean countries while the population of Panama was less than 300,000.

The Isthmus of Panama entered a historical turning point when the United States started the construction of the Canal. Panama declared the separation and independence from Nueva Granada and concluded the 'Canal Treaties' with the United States in 1903. The Canal was completed in 1914 when the World War Ⅰ broke out. The Panama Canal has been an important maritime transportation route connecting the east and the west coast of the United States as well as taken a great role in the global maritime transportation.

The Panama Canal has been fully reverted to Panama at noon of December 31, 1999 as stipulated in the 'New Canal Treaties' concluded with the United States in 1977. The President of the Republic of Panama, Mireya Moscoso declared in the ceremony that, "This is the third independence of Panama following to the independence from Spain in 1821 and the separation and independence from Columbia in 1903".

The Panama Canal has given big impacts to socio-economic developments of the Republic. Today, Panama is trying to open a new page of her history by making a big decision-making to execute the Canal Expansion Project responding to the increasing traffic demands in the Canal, incorporating this gigantic project and

other development projects promoted in the reverted areas into the national development strategy.

1.1.2 Essential Data of Panama

The Republic of Panama is bordering with Columbia in the east and Costa Rica in the west. The central mountain range runs toward the border of Costa Rica while gradual mountains spread toward the center of the country. The Panama Canal locates in the plain area of the Isthmus of Panama where its width is in the narrowest of 80km and the Canal looks like as if it digs and splits the center of the country.

While Panama belongs to the tropical rain forest, there are good locations for the coffee plantations because of the relatively cool temperature in the high mountainous areas. With much of rain fall and hot weather, Banana farming is popular in the coastal areas. The water resources, which are indispensable for operating the Canal, are secured by the plenty of the rain falls (annual rainfall reaches 5,000mm in the Western side of the country and 3,000 mm in the Canal area) during the rain season (about 8 months from May to December).

The total land area is 75,000 square kilo meters which is a little smaller than that of Hokkaido, Japan. There are 9 provinces and 3 autonomous districts for the natives. The population has showed drastic changes in the Panamanian history; it was about 430,000 during the construction of the Canal in 1911 and 850,000 in 1950. It reached to 1,500,000 in 1970 and 2,300,000 in 1990. According to the latest figures, it has drastically increased to 2,800,000 in 2000 (population growth rate is 1.5 percent). About the half of total populations are concentrated in the Province of Panama. The population of the native peoples living in rural areas is about 150,000. They are economically in a poverty level while they have their own culture and the autonomy.

The total GDP of the Republic is about US$ 10 billion. The 70 percent of its amount belongs to the Province of Panama as the center of the economic activities in the Republic. It is one of the backgrounds of the social problems in Panama that there are serious economic gaps between the Province of Panama and the others where fewer industries exist other than agriculture.

While Spanish is the official language and the literacy rate is 91 percent, there are big differences in these figures in different areas. Christianity is the major religion (85% for Catholic and 15% for Protestant).

1.1.3 Characteristics of Political Structure

The 'Panama Canal Treaty', concluded in 1903 with the United States at the moment of turmoil of the separation and the independence from Columbia, was utterly unequal one for Panama. Since then, the revision of the treaty positioned the important issue of foreign affairs in Panama. Finally in 1977, the New Canal Treaty ("Torrijos-Carter Treaties") was signed. A few years after the conclusion of the New Treaties, Colonel Noriega, who took the power shortly after the death of the General Torrijos in a plain crash, strengthened the military control in the domestic policies, and took antagonistic postures against the United States, resulted the military invasion of the United States in December 1989. The military dictatorship ended and the representative democracy revived after an interval of 20 years. Arnulfista Party, who was the leading force of criticizing the military dictatorship made a win in the general election held in 1989. However, because of their long absence in the administration, their political power ended in just 5 years. The Democratic Revolution Party, who was a supporting party to the military regime, returned to the political power in the next election. President Balladares adopted positive strategies oriented to the market economy; privatization of national companies such as telecommunications, electric powers, ports and others, reducing import duties and promoting civil works such as road constructions.

In the next election, Mireya Moscoso from the Arnulfista Party was elected as the first female President of the Republic in May 1999. One of the important policies that Moscoso regime lifted was to alleviate the economic gaps between the Province of Panama and the other regions. Such policies are also carried by the same regime as "Decentralization programs", "Rural Development Plans" and "Tax Reforms" under the strong pressures of reducing the enormous external debts in the public sectors.

In order to satisfy the "Third Independence", the regime is required to establish a nation wide development strategy by incorporating the Panama Canal Expansion Projects and other projects promoted in the reverted areas into national economy in harmony with regional economic developments.

1.1.4 Characteristics of the Economic Structure

Panama has adopted the U.S. Dollars as their own currency since the Canal construction era, and has neither a central bank nor exchange controls. Also there is a structural characteristic that the service industries, including the Panama Canal, Colon Free Zone, wholesales and retails, law firms, port operation and tourism, have their shares at 70 percent of the total GDP.

Let us see the development of the major service industries. Using the Canal, geographic location and the U.S. Dollars as weapons, Colon Free Zone which was established in the Atlantic side of the Canal in the Colon city, has expanded its scale following to Hong Kong since 1940's. The Banking Law newly promulgated in 1970 has created the basis of the development of banking center in Panama. About 100 overseas banks have been established, and many financial and insurance services have also been activated.

Panama is famous for the flagship registry, today holding the 1st position in the world followed by Liberia, which has activated the law firms. It is the transshipment businesses that have considerably been developed in these days; through the MIT, U.S.-Panama joint venture in the reverted area in the Atlantic side, and the development of the container yard by Evergreen, Taiwan. Panama has become the No. 1 in handling containers in Latin American. As the progress of development of the container port in the Pacific side by the Hong Kong capital, Hutchison, Panama shall take the role of the hub ports both in the Pacific and Atlantic side for Latin American countries.

The "National Maritime Strategy", including Panama Canal Expansion Project, container ports businesses and other maritime related sectors, has been discussed and studied as a kind of national development strategy never planed in the Republic.

1.1.5 Panama Canal Expansion Project

1.1.5.1 Increase of the Traffic and Enlarging Vessel Size

In parallel with the increase of the world trade, the traffic of the Panama Canal has also steadily been boosted, and it is a remarkable tendency that the size of the vessel has been enlarged. When we see the change of the number of vessels which navigate the Canal by the size, the ratio of the large vessels classified in the "20,000 tons to 40,000 tons" has been increased year by year; 32.4 percent in '91, 41.8 percent in '96 and 50 percent in '02. It should also be emphasized that the Panamax size of the vessels classified in more than 40,000 tons has reached to 16 percent (1,857 vessels) out of the total number of the vessel.

We need to put the remark that the traffic of the container vessels has showed considerable increases. In 2000, 17 percents of the total traffic were container commodities which represented the 2nd position next to cereals (20 percent). The background of this trend is in the increase of container cargos to the east coast of the United States from the Asian countries including China. This trend is also accelerating the enlargement of the size of the container vessels. Thus, it becomes clear and urgent issue that counter measures should be taken to

respond to the expanding demand of the Post Panamax Vessel.

The United States is the largest customer of the Panama Canal, and 60 percent of the total cargos which pass the Canal are to/from the United States. Japan is the 2nd customer of the Canal with its share of the cargo about 16 percent.

1.1.5.2 Modernization of the Canal and Expansion Project

The study for the expansion of the existing Panama Canal has already started before the World War II. The Isthmian Canal Commission started the construction of the third locks, but suspended in 1942.

In 1993, after more than 8 years alternative study carried by the 3 Governments (Panama, the U.S.A. and Japan) through the "Panama Canal Alternative Study Commission", the third set of lock canal was advised as the best alternative to the present canal.

Before the transfer of the Canal, The Panama Canal Commission started the modernization of the Canal in the late '90s as the countermeasures for the deterioration of the current Canal facilities which have passed more than 80 years since the construction. ACP has taken over those projects, such like widening of the Culebra Cut, replacement of the locomotives and its rails, replacement to the hydraulic type of the operational machines of the gates. The total amount is about US$ 850 million for these projects most of which have been completed in the year 2002.

ACP has started a series of feasibility studies since 1998 for the construction of the new Canal for the Post Panamax vessels. Typical studies are 1) Security of Water Resources for the vessel transit, 2) Hydro Power Plants, 3) New Lock Gates, 4) Excavation of Navigation Route, Widening of Canal, Disposal and Utilization of Excavated Materials, 5) Environmental Impact Assessment, 6) Living Environment Issue of Inhabitants in the Canal Watershed Areas, 7) Economic and Financial Analysis, 8) Plan for International Financial Scheme, 9) Demand Forecast and others.

In October 2001, a Belgian-French consortium has been awarded for the concept design of the new locks in the Pacific side. The U.S. Corps of Engineer has already started the concept design of the locks in the Atlantic side. The final reports of the both studies shall be submitted in December 2003.

An International bidding was carried in February 2002 for a consultant who should manage the whole projects, the ACP has concluded 10 years contract with the successful bidder.

ACP had carried a project to deepen the Gatun Lake in order to increase the water preservation from the year 2002 to 2003. ACP also have changed the tolling system and revised the toll fee of the Canal (total 13 percent after the 2 times increases in 2002 and 2003) in order to prepare the funds needed for the project by their own. It is said that series of the feasibility studies shall be completed in May 2004. The General Election is scheduled in May 2004, and the new government shall start in September 2004. Accordingly, the final decision making over the Canal Expansion Project shall be made thereafter.

1.2 Scope of the Study

1.2.1 Objectives of the Study

In order to determine the feasibility of building new locks, integral information of fabrication and installation methods as well as cost estimates for all lock gates of a two-and three-lift lock configuration, and for both miter and rolling types of lock gates are under consideration. This Study shall provide engineering services to recommend fabrication and installation methods as well as cost estimates for lock gates, including special facilities and equipment requirements for such purposes taking into consideration of the adequacy of using presently available local facilities and equipment in Panama.

1.2.2 Scope of Work

To achieve the objectives mentioned above, the Study will cover the following work items:

A. Preparatory Work:

a. Collection and review of the existing engineering studies, surveys and investigations relevant to Post-Panamax lock gates such as prepared by the US Army Corps of Engineers (USACE) and a Consortio Post-Panamax (CPP).

b. Identification, collection and analysis of the engineering data necessary for preparing an integral study of fabrication and installation methods as well as cost estimates for all lock gates of a two-and three-lift lock configuration, and for both miter and rolling types of lock gates.

c. Field visits to new lock sites and presently available local facilities such as ports and equipments in Panama, and those that may need to be constructed for fabrication, transportation and installation of the new lock

gates.

B. Recommendations and Provisions of an Integral Study for the New Locks:

a. Provision of an integral study of fabrication and installation methods as well as cost estimates for all lock gates of a two- and three-lift lock configuration, and for both miter and rolling types of lock gates.

b. The engineering services shall cover the following tasks:

a) Recommend the best option of fabrication and installation methods for lock gates after the analysis and evaluation of alternative methods for assembling of lock gates under each concept design alternatives, including special facilities and equipment requirements for such purposes, taking into consideration of the adequacy of using presently available local facilities and equipment in Panama, and also of that may need to be constructed for fabrication, transportation and installation of the new lock gates.

b) Provide a detailed and summarized description of the estimated costs for the fabrication and installation of lock gates, including gate structural requirements for support, installation, operating machinery, maintenance facilities, and controls, after evaluation for the main lock gate infrastructure, taking into consideration of the availability of local construction personnel, facilities, and equipment as well as the possibility of importing some of these items or gate components.

The size of the new lock gates is shown in the Table 2.1-1 “Concept Design Data of New Locks”（P.2-2）.

C. Work Plan

For the preparation of an integral study for the New Locks, following works shall be executed；

a) Confirmation of basic elements for designing new lock gates such as construction criteria, material quantities and standards of material to be used,

b) Confirmation of overall work schedule for the construction of new locks,

c) Confirmation of working conditions at the moment of installing lock gates, whether the construction site is in dry or in wet conditions,

d) Study on the fabricators in surrounding countries,
e) Analysis on the place to be assembled and the unit of fabrication,
f) Study on the heavy equipments such as cranes, transportation installations available in Panama,
g) Study on the availability of local construction personnel (especially welders), facilities, and equipment as well as the possibility of importing some of these items or gate components,
h) Analysis on the unit of components to be installed, taking into consideration of the conditions of installation site,
i) Study on the transportation, local facilities at ports, terrestrial facilities near to the construction sites,
j) Analysis on the overall work schedule,
k) Analysis on the costs of materials for lock gates and operational machinery,
l) Analysis on the costs of fabrication of new lock gates by each size described in the concept design,
m) Analysis on the costs of installation for new lock gates in accordance with each installation methods,
n) Analysis on the costs of transportation methods,
o) Analysis on the costs of technical advisers to be dispatched for the fabrication of new lock gates in Panama or surrounding countries,
p) Evaluation and comparison on the cost analysis on the above mentioned items for the Rolling Gate and the Miter Gate,
q) Overall evaluation shall be executed taking into consideration of fabrication and installation working period after the evaluation of above item p).

2. Premises of the Study

Chapter 2. Premises of the Study

2.1 Conceptual Design of the New Lock Gate Project

Many efforts have been made to realize the expansion and modernization of the Panama Canal to meet the steadily increasing world freight transportation. Among them are the constructions of the 3rd Lock Canal tried and suspended by the Isthmian Canal Commission (1939-1942), the Alternative Study for the 3rd Set of Locks undertaken by the three Governments of the Republic of Panama, the U.S.A. and Japan (1986-1993). The Autoridad del Canal de Panama (ACP) has undertaken the modernization programs investing US$ 850 million in 10 years. The same ACP also announced in 2000 the Canal Expansion project called "the 3rd Lock Canal for Post-Panamax" (Post-Panamax Project). In the past few years the ACP has contracted more than hundred feasibility studies to meet the Project. The ACP has executed two independent contracts for developing concept designs for Post-Panamax Locks of different configurations with water saving basins in October 2001. For the Atlantic side, the US Army Corps of Engineers (USACE) recommends the use of miter gate and for the Pacific side the Consorcio Post-Panamax (CPP; a Belgian-French consortium) recommends the rolling gate.

Table 2.1-1 shows the concept design Data for the New Locks given in the TOR prepared by the ACP.

Figs. 2.1-1 and 2.1-2 are the probable alignments at the Pacific and Atlantic side prepared by the ACP.

Figs. 2.1-3 and 2.1-4 are the images of the both gates with height prepared by the Study Team.

Table 2.1-2 is the aggregate weight list of all gates for the New Locks, to which the weight data are brought forward from the following tables.

Tables 2.1-3 through 2.1-6 are the total weight lists of miter gates (3-lift, 2-lift) and rolling gates (3-lift, 2-lift) estimated by the Team.

Table 2.1-1 Concept Design Data of the New Locks

	Atlantic		Pacific	
Type of lock gate	Miter gate		Rolling gate	
Configuration of Lift Lock	2-Lift with 2WSB 3-Lift with 2WSB		2-Lift with 2WSB 3-Lift with 3WSB	
Water Elevation	Atlantic Entrance +0.56 to -0.38 m		Pacific Entrance +3.60 to -3.44 m	
Gatun Lake Elevation	26.8 to 23.9 meters			
Chamber size	Length between inner gates: 426.8 m Overall width: 61.0 m Water depth over the gate sills: 18.3 m			
Height of gate	2-Lift	3-Lift	2-Lift	3-Lift
#1 36.50 m			2	
#2 35.49 m			2	
#3 31.70 m				2
#4 30.50 m		6		4
#5 34.50 m	4			
#6 22.70 m			2	2
#7 22.34 m	2	2		

Note: WSB: water saving basins; m: meters (Based on ACP/IPC's TOR dated June 3, 2003)

Fig. 2-1-1 Panama Canal: Probable Alignment on the Atlantic

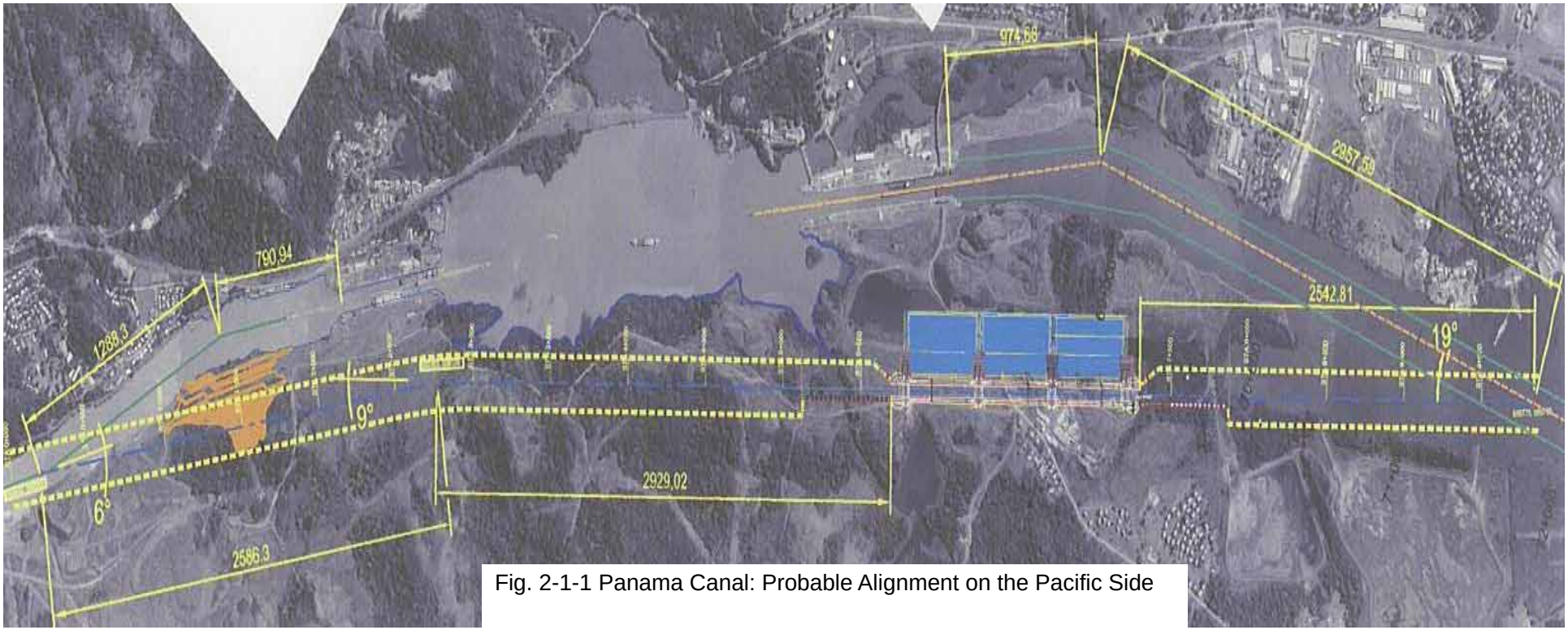

Fig. 2-1-1 Panama Canal: Probable Alignment on the Pacific Side

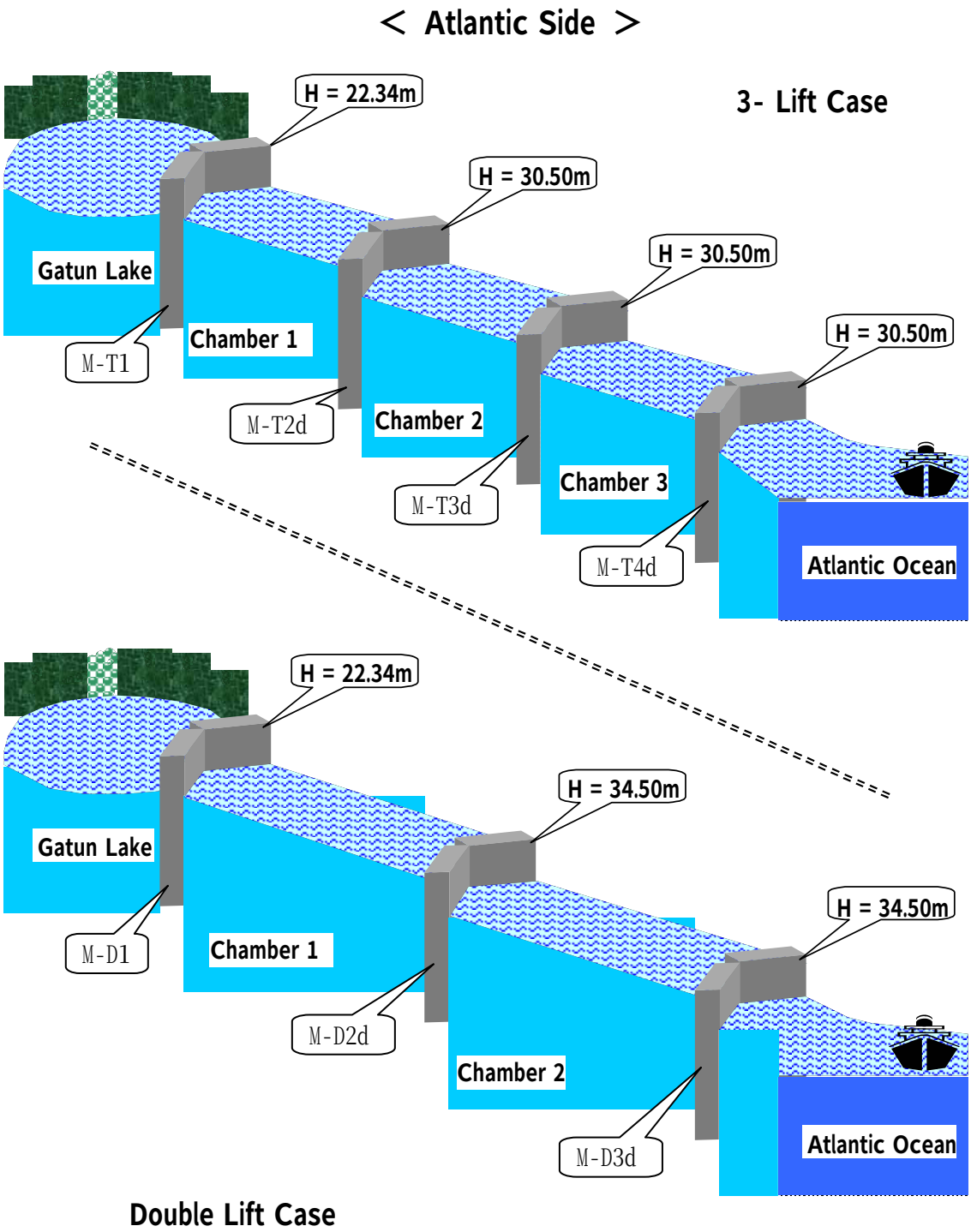

Fig.2.1-3 Panama Canal: Gate Image (Miter Type)

Naming Method

Gate Type		Lift Type		Gate No.		Skin Type		Study Case
○	-	○	+	Num.	+	○	-	(○)
↑		↑				↑		
M: Miter Gate		D:2-Lift				non: Single Skin Type		
R: Rolling Gate		T: 3-Lift				d : Double Skin Type		

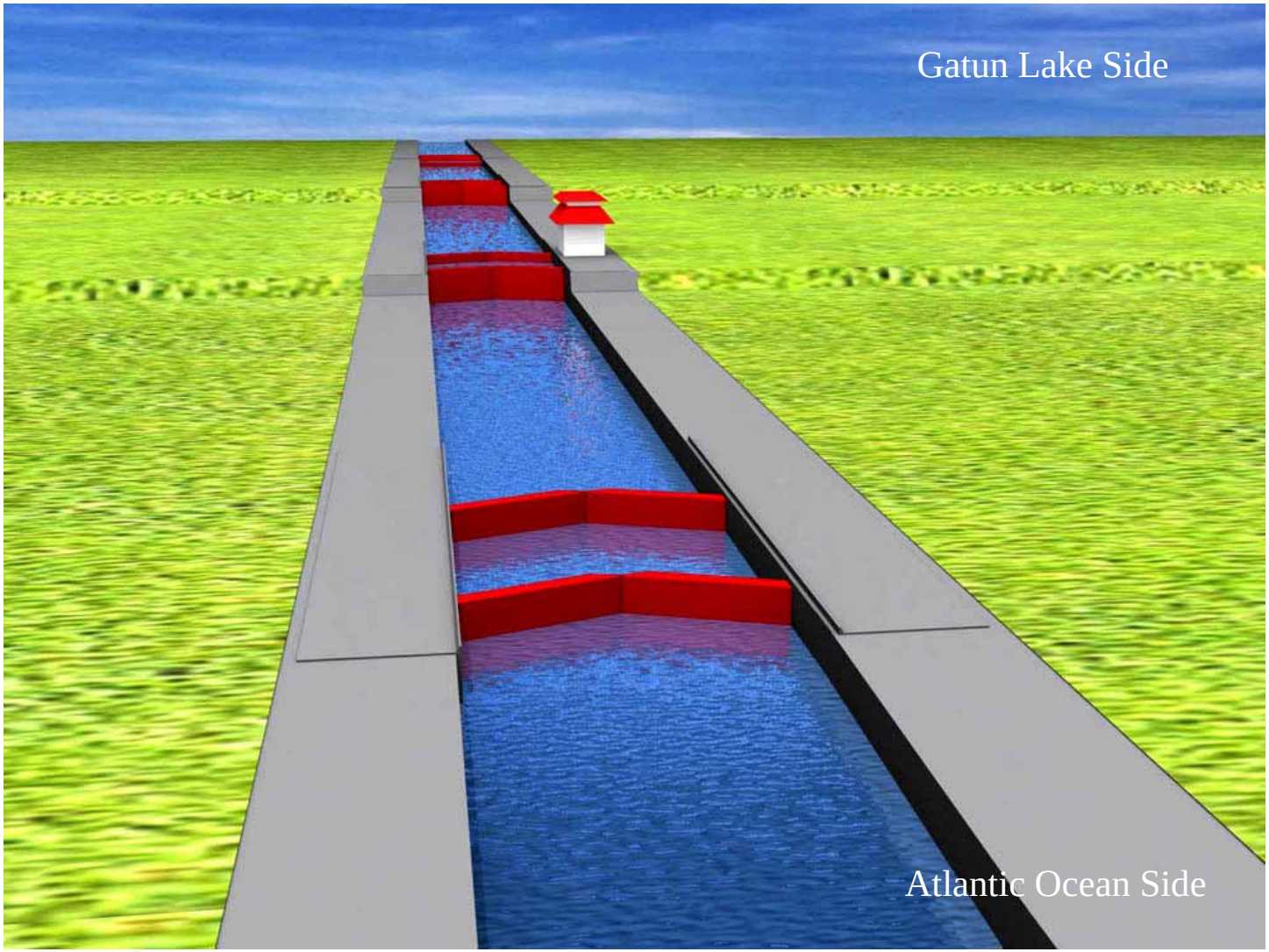

Fig 2.1-4 Bird View of Miter Gate 3-Lift

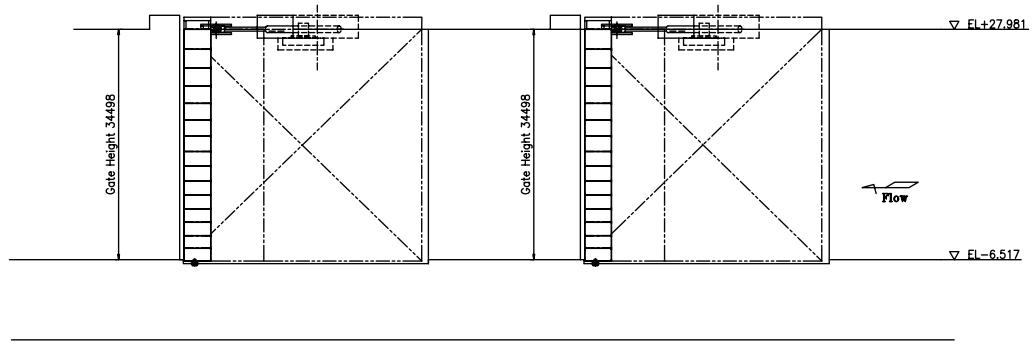

SECTION

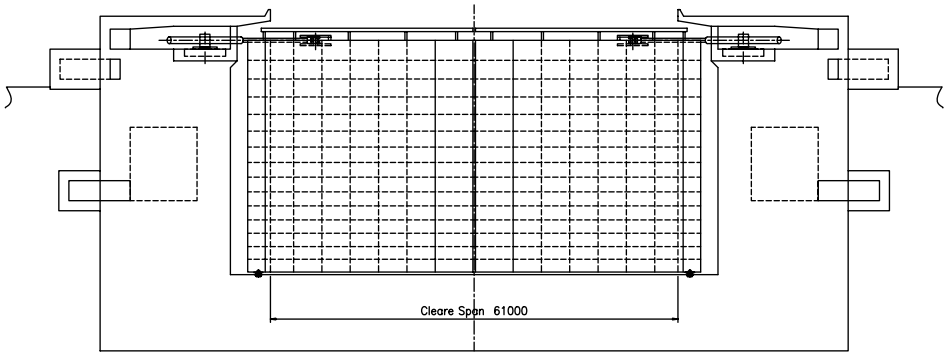

ELEVATION

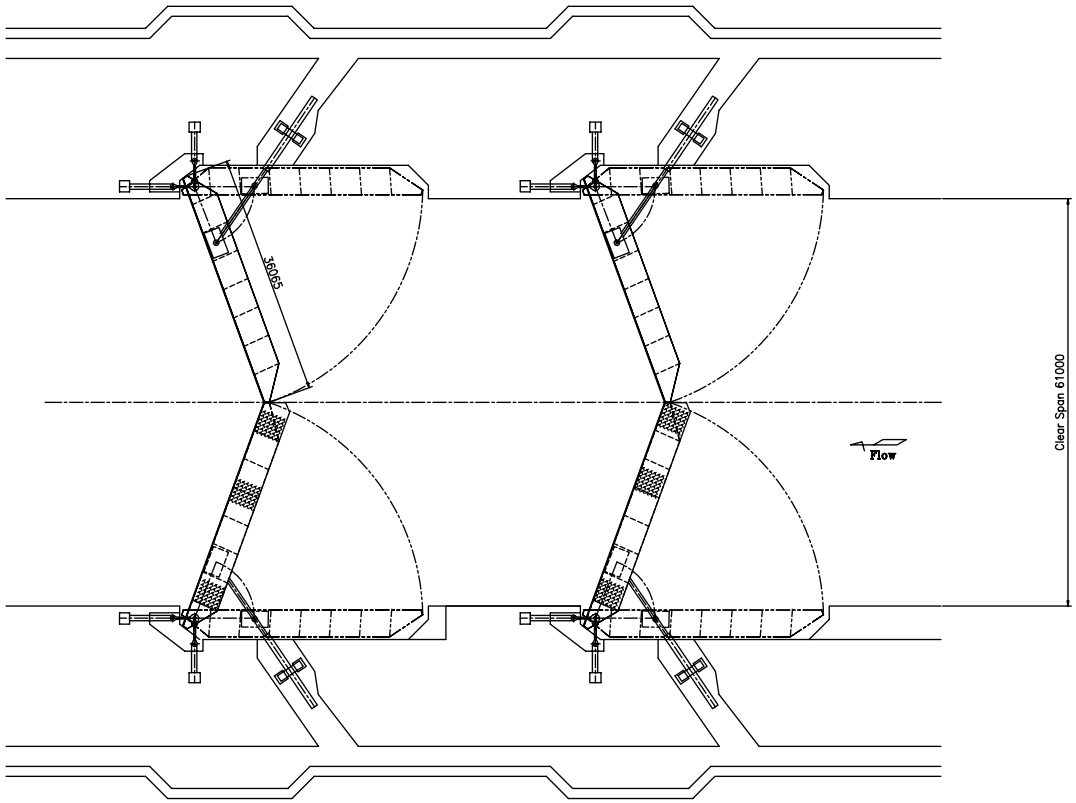

PLAN

GENERAL ARRANGEMENT

Miter Gate M-D3d

Fig. 2.1-5 General Plan Miter Gate (2Lift, D3d)

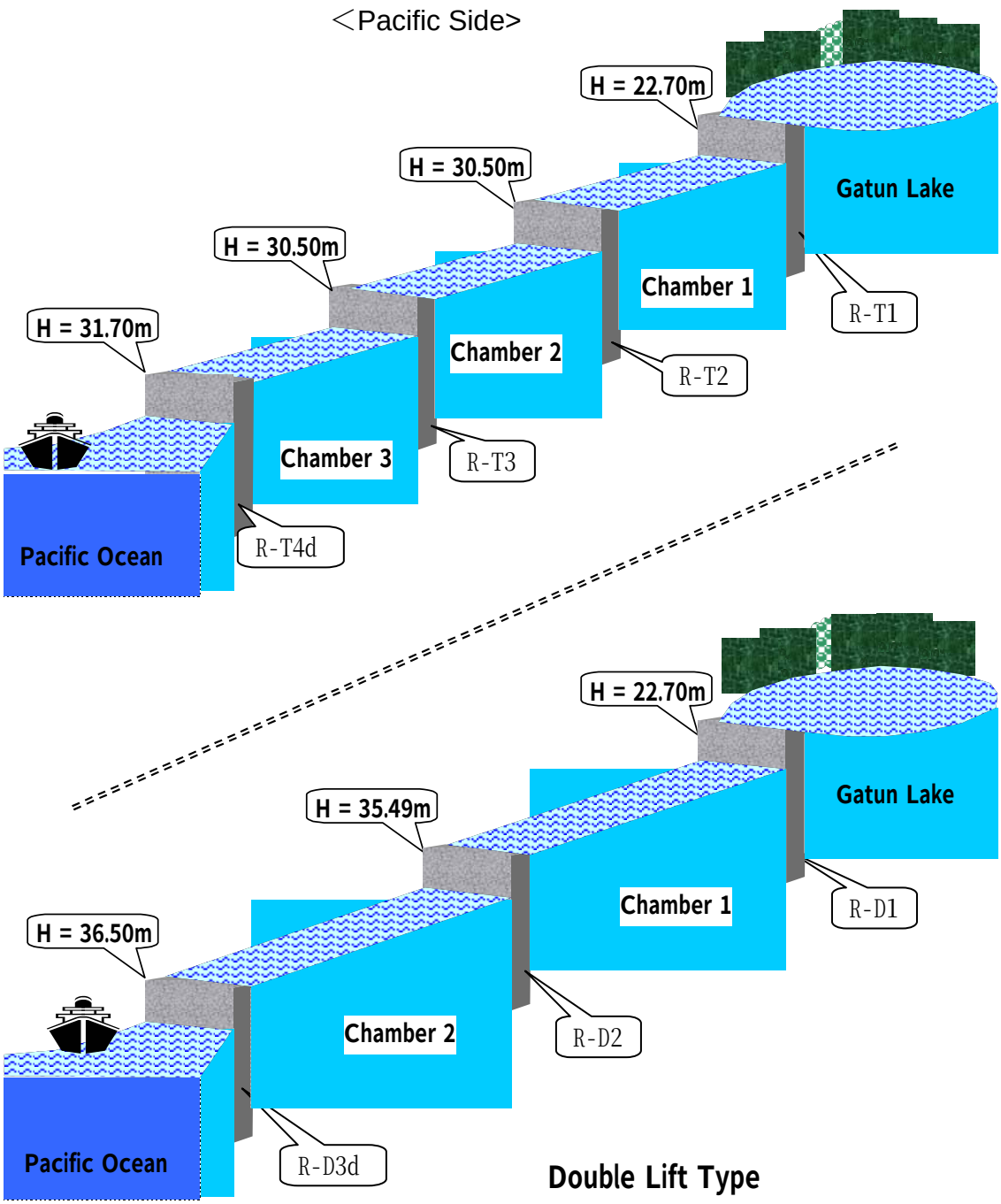

Fig.2.1-6 Panama Canal: Gate Image (Rolling Type)

Naming Method

Gate Type		Lift Type		Gate No.		Skin Type		Study Case
○	-	○	+	Num.	+	○	-	(○)
↑		↑				↑		
M: Miter Gate		D:2-Lift				non: Single Skin Type		
R: Rolling Gate		T: 3-Lift				d : Double Skin Type		

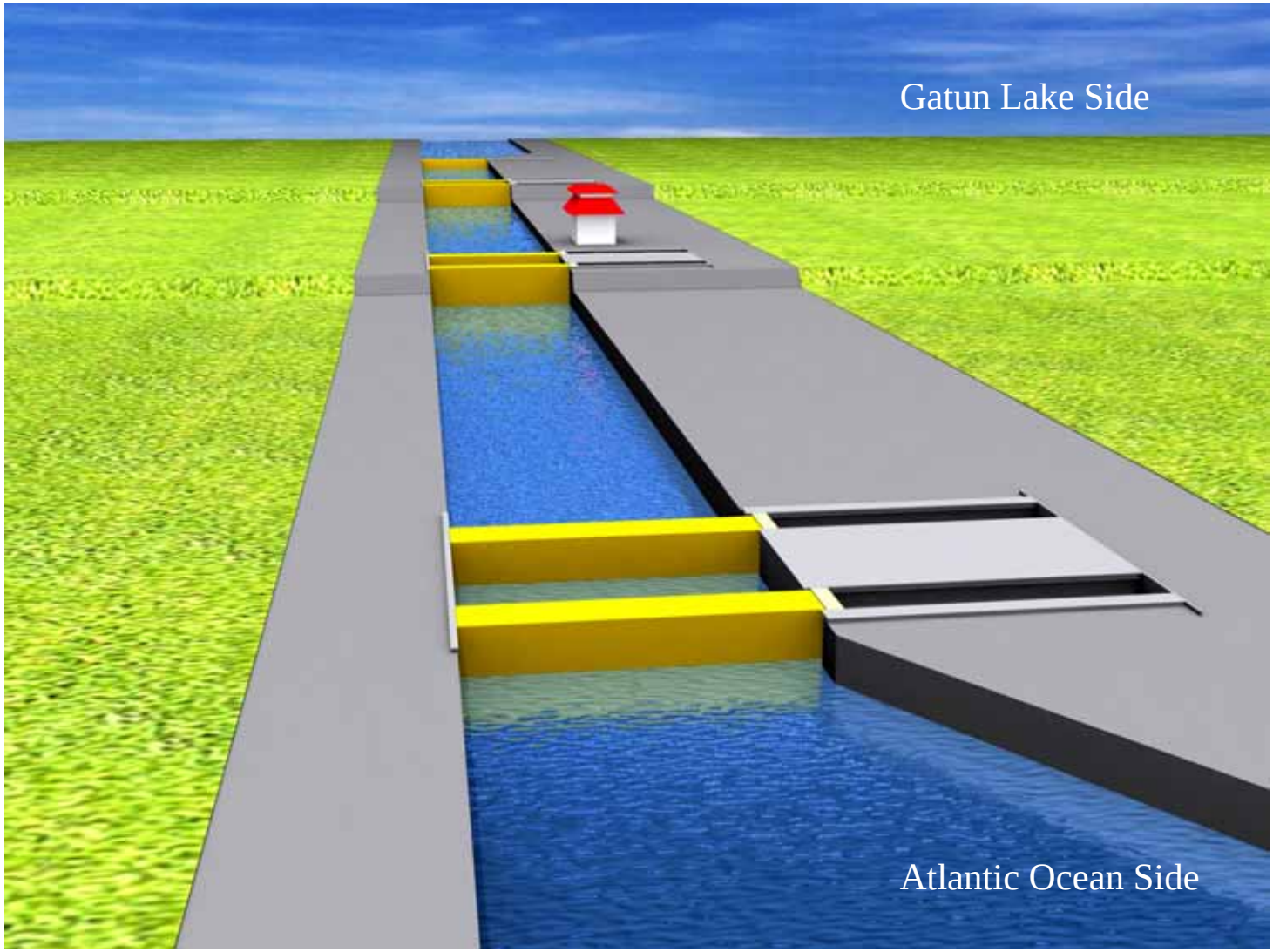

Fig. 2.1-7 Bird View of Miter Gate (3-Lift)

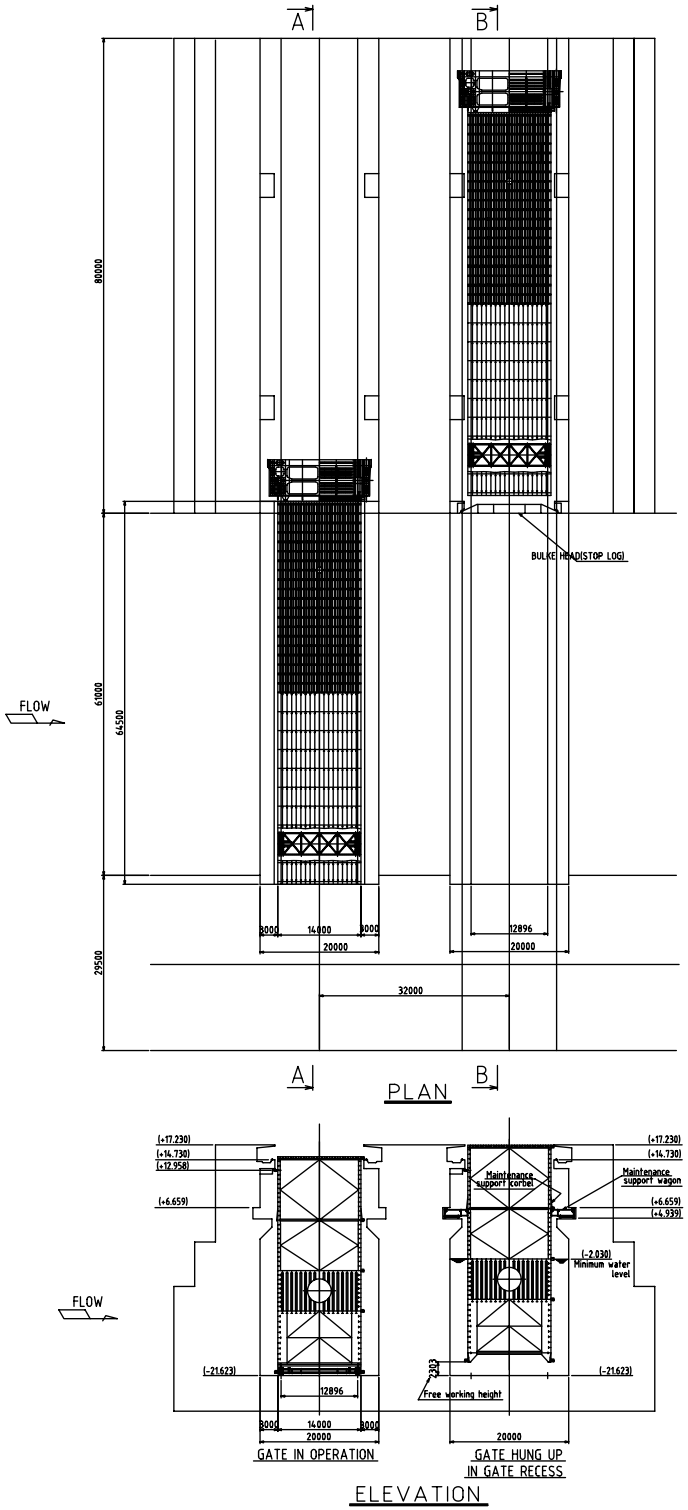

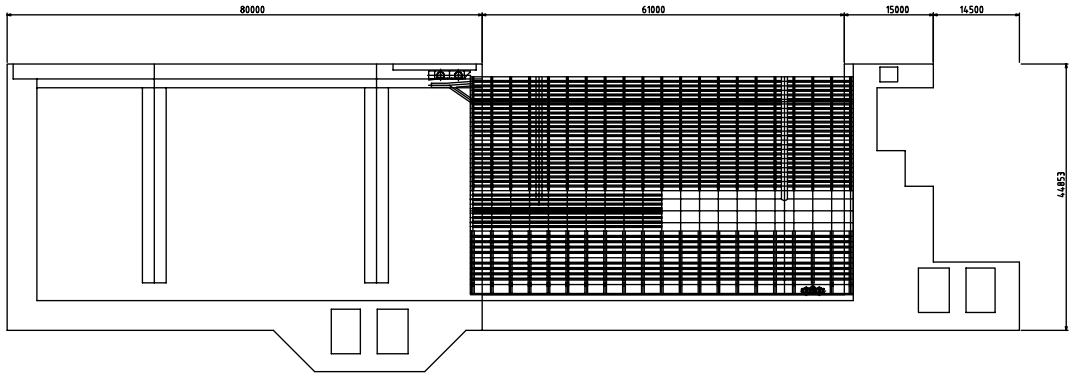

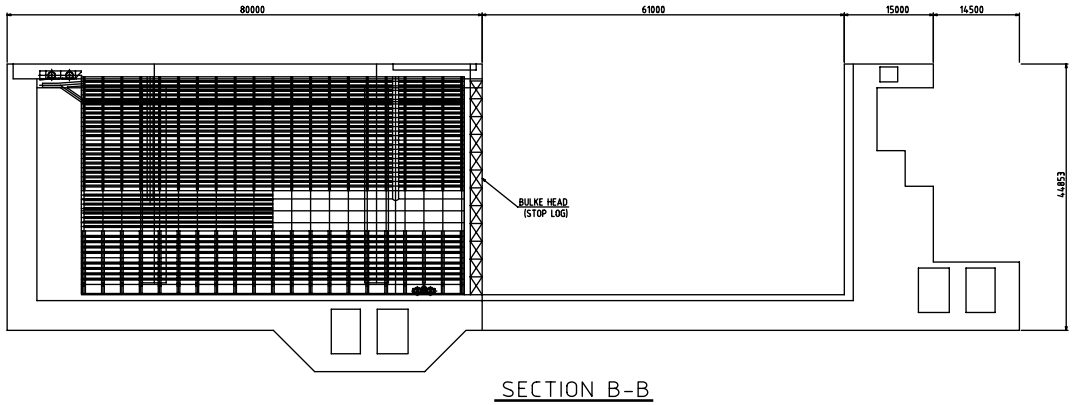

GENERAL ARRANGEMENT
Rolling Gate R-D3d

Fig. 2.1-5 General Plan of Miter Gate (2 Lift, D3d)

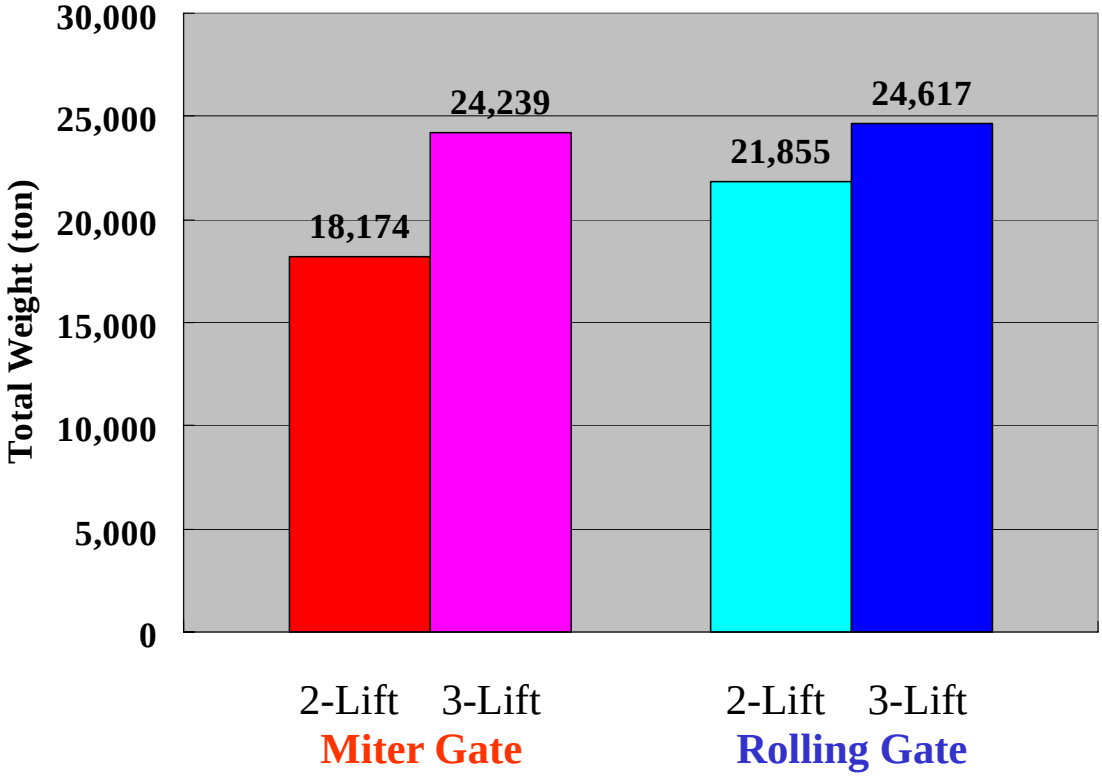

Fig 2.1-9 Aggregate Weight List of All Gates for the New Locks

Remarks

a) This total weight list was estimated based on the concept design data received from ACP. For the itemization, refer to Table 2.1-2~ 5 "Total weight List".

b) In the Panama Canal, the gates are duplicated for the purpose of minimizing the function loss due to the collision with vessels. In other words, the number of installed gate sets is twice the necessary number of gates (sets).
It should be carefully noted that this concept is adopted in new gate facilities [Refer to Fig.2.1-4, 5 (Miter Gate) and Fig.2.1-7, 8 (Rolling Gate)] and the number of installed gates is twice the necessary quantity.

c) On set of the gates is composed of 2 pieces of miter gates.
Accordingly, note that the number of gates becomes twice the number of gate sets.
Since one gate set is composed of one gate in case of the rolling gate, the number of gate sets is equal to the gate quantity.

Table 2.1- 2 Total Weight List of Miter Gate,2-Lift

No.	Item	Item Name	Quantities	UNIT Weight (ton)	Total Weight (ton)	Paint Area (m^2)		
Miter Gate M-D1(2-Lift, South Gate (Single Skin))								
1	Gate Leaf (Major materials:ASTM A572M or equivalent materials)					High build type tar epoxy resin paint /()primer		Acid pickling
		Gate leaf	2	1,210	2,420	14,900		
		Pintel (include anchorage,base)	2	35	140		(594)	
		Hoist Anchorage	2	17	34	144		
	Sub Total (2 pieces)			1,262	2,594	15,044	(594)	
2	Embedded Frame (Major materials:ASTM A36,S30400 or equivalent materials)					High build type tar epoxy resin paint /()primer		Acid pickling
		Sill Guide Frame	1	10	10		(60)	48
		Side Frame	1	7	7		(91)	72
	Sub Total			4	17		(151)	120
1 Set Total					2,611	15,044	(746)	120
2Set Total					5,222	90,266	(4,474)	720
Miter Gate M-D2d~D3d(2-Lift, Center & Nouth Gate (Doble Skin))								
1	Gate Leaf (Major materials:ASTM A572M or equivalent materials)					High build type tar epoxy resin paint /()primer		Acid pickling
		Gate leaf	2	1,494	2,988	23,400.00		
		Pintel (include anchorage,base)	2	45	180		(764)	
		Hoist Anchorage	2	24	48	203.82		
	Sub Total (2 pieces)			1,563	3,216	23,604	(764)	
2	Embedded Frame (Major materials:ASTM A36,S30400 or equivalent materials)					High build type tar epoxy resin paint /()primer		Acid pickling
		Sill Guide Frame	1	15	15		(91)	72
		Side Frame	1	7	7		(91)	72
	Sub Total			4	22		(144)	144
1 Set Total					3,238	23,604	(908)	144
4Set Total					12,952	94,415	(3,633)	576
Grand Total					18,174	184,682	(8,107)	1,296

Table 2.1- 3 Total Weight List of Miter Gate, 3-Lift

No.	Item	Item Name	Quantities	UNIT Weight (ton)	Total Weight (ton)	Paint Area (m^2)		
Miter Gate M-T1(3-Lift, South Gate (Single Skin))								
1	Gate Leaf (Major materials:ASTM A572M or equivalent materials)					High build type tar epoxy resin paint /()primer		Acid pickling
		Gate leaf	2	1,210	2,420	14,900		
		Pintel (include anchorage,base)	2	35	140		(594)	
		Hoist Anchorage	2	17	34	144		
	Sub Total (2 pieces)			1,262	2,594	15,044	(594)	
2	Embedded Frame (Major materials:ASTM A36,S30400 or equivalent materials)					High build type tar epoxy resin paint /()primer		Acid pickling
		Sill Guide Frame	1	10	10		(60)	48
		Side Frame	1	7	7		(91)	72
	Sub Total			4	17		(151)	120
1 Set Total					2,611	15,044	(746)	120
2Set Total					5,222	90,266	(4,474)	720
Miter Gate M-T2d~T4d(3-Lift, Center & Nouth Gate (Doble Skin))								
1	Gate Leaf (Major materials:ASTM A572M or equivalent materials)					High build type tar epoxy resin paint /()primer		Acid pickling
		Gate leaf	2	1,474	2,948	22,000		
		Pintel (include anchorage,base)	2	40	160		(679)	
		Hoist Anchorage	2	20	40	170		
	Sub Total (2 pieces)			1,534	3,148	22,170	(679)	
2	Embedded Frame (Major materials:ASTM A36,S30400 or equivalent materials)					High build type tar epoxy resin paint /()primer		Acid pickling
		Sill Guide Frame	1	14	14		(89)	71
		Side Frame	1	7	7		(91)	72
	Sub Total			4	22		(180)	143
1 Set Total					3,170	22,170	(859)	143
6Set Total					19,017	133,019	(5,154)	855
Grand Total					24,239	223,285	(9,628)	1,575

Table 2.1- 4 Total Weight List of Rolling Gate, 2-Lift

No.	Item	Item Name	Quantities	UNIT Weight (ton)	Total Weight (ton)	Paint Area (m^2)		
Rolling Gate R-D1(2-Lift, Single Skin)								
1	Gate Leaf (Major materials:EN10027-1 or equivalent materials)					High build type tar epoxy resin paint /()primer		Acid pickling
		Gate leaf	1	2,100	2,100	15,270		
		Upper Wagon	1	30	30	244		
		Lower Wagon	1	15	15	137		
	Sub Total (1 piece)			2,145	2,145	15,651		
2	Embedded Frame (Major materials:EN10027-1,EN10088-1 or equivalent materials)					High build type tar epoxy resin paint /()primer		Acid pickling
		Sill Guide Frame	1	13	13		(166)	132
		Sill Seal Plate & Rail (Chamber)	1	59	59		(388)	211
		Lower Wagon Rail (Gate Slot)	1	13	13		(333)	79
		Side Frame	1	10	10		(129)	102
		Upper Wagon Rail	1	48	48		(333)	79
	Sub Total			144	144		(1,348)	604
1Set Total					2,289	15,651	(1,348)	604
2Set Total					4,578	31,301	(2,696)	1,207
Rolling Gate R-D2(2-Lift, Single Skin)								
1	Gate Leaf (Major materials:EN10027-1 or equivalent materials)					High build type tar epoxy resin paint /()primer		Acid pickling
		Gate leaf	1	3,700	3,700	39,589		
		Upper Wagon	1	40	40	359		
		Lower Wagon	1	20	20	231		
	Sub Total (1 piece)			3,760	3,760	40,179		
2	Embedded Frame (Major materials:EN10027-1,EN10088-1 or equivalent materials)					High build type tar epoxy resin paint /()primer		Acid pickling
		Sill Guide Frame	1	13	13		(166)	132
		Sill Seal Plate & Rail (Chamber)	1	59	59		(388)	211
		Lower Wagon Rail (Gate Slot)	1	13	13		(333)	79
		Side Frame	1	15	15		(189)	150
		Upper Wagon Rail	1	48	48		(333)	79
	Sub Total			149	149		(1,409)	652
1Set Total					3,909	40,179	(1,409)	652
2Set Total					7,818	80,358	(2,817)	1,303
Rolling Gate R-D3d(2-Lift, Double Skin)								
1	Gate Leaf (Major materials:EN10027-1 or equivalent materials)					High build type tar epoxy resin paint /()primer		Acid pickling
		Gate leaf	1	4,500	4,500	45,315		
		Upper Wagon	1	50	50	359		
		Lower Wagon	1	30	30	231		
	Sub Total (1 piece)			4,580	4,580	45,905		
2	Embedded Frame (Major materials:EN10027-1,EN10088-1 or equivalent materials)					High build type tar epoxy resin paint /()primer		Acid pickling
		Sill Guide Frame	1	13	13		(166)	132
		Sill Seal Plate & Rail (Chamber)	1	59	59		(388)	211
		Lower Wagon Rail (Gate Slot)	1	13	13		(333)	79
		Side Frame	1	16	16		(197)	156
		Upper Wagon Rail	1	48	48		(333)	79
	Sub Total			150	150		(1,416)	658
1Set Total					4,730	45,905	(1,416)	658
2Set Total					9,459	91,810	(2,832)	1,315
Grand Total					21,855	203,469	(8,346)	3,826

Table 2.1- 5 Total Weight List of Rolling Gate, 3-Lift

	Item	Item Name	Quantities	UNIT Weight (ton)	Total Weight (ton)	Paint Area (m^2)		
Rolling Gate R-T1(3-Lift, Single Skin)								
1	Gate Leaf (Major materials:EN10027-1 or equivalent materials)					High build type tar epoxy resin paint /()primer		Acid pickling
		Gate leaf	1	1,900	1,900	11,751		
		Upper Wagon	1	30	30	218		
		Lower Wagon	1	15	15	116		
	Sub Total (1 piece)			1,945	1,945	12,085		
2	Embedded Frame (Major materials:EN10027-1,EN10088-1 or equivalent materials)					High build type tar epoxy resin paint /()primer		Acid pickling
		Sill Guide Frame	1	13	13		(166)	132
		Sill Seal Plate & Rail (Chamber)	1	59	59		(388)	211
		Lower Wagon Rail (Gate Recess)	1	13	13		(333)	79
		Side Frame	1	10	10		(121)	96
		Upper Wagon Rail	1	48	48		(333)	79
	Sub Total			143	143		(1,341)	598
1 Set Total					2,088	12,085	(1,341)	598
2Set Total					4,177	24,171	2,681	1,195
Rolling Gate R-T2,3(3-Lift, Single Skin)								
1	Gate Leaf (Major materials:EN10027-1 or equivalent materials)					High build type tar epoxy resin paint /()primer		Acid pickling
		Gate leaf	1	2,900	2,900	26,732		
		Upper Wagon	1	40	40	297		
		Lower Wagon	1	20	20	180		
	Sub Total (1 piece)			2,960	2,960	27,209		
2	Embedded Frame (Major materials:EN10027-1,EN10088-1 or equivalent materials)					High build type tar epoxy resin paint /()primer		Acid pickling
		Sill Guide Frame	1	13	13		(166)	132
		Sill Seal Plate & Rail (Chamber)	1	59	59		(388)	211
		Lower Wagon Rail (Gate Slot)	1	13	13		(333)	79
		Side Frame	1	13	13		(159)	126
		Upper Wagon Rail	1	48	48		(333)	79
	Sub Total			146	146		(1,378)	628
1 Set Total					3,106	27,209	(1,378)	628
4Set Total					12,426	108,837	5,514	2,510
Rolling Gate R-T4d(3-Lift, Double Skin)								
1	Gate Leaf (Major materials:EN10027-1 or equivalent materials)					High build type tar epoxy resin paint /()primer		Acid pickling
		Gate leaf	1	3,800	3,800	31,842		
		Upper Wagon	1	40	40	297		
		Lower Wagon	1	20	20	180		
	Sub Total (1 piece)			3,860	3,860	32,319		
2	Embedded Frame (Major materials:EN10027-1,EN10088-1 or equivalent materials)					High build type tar epoxy resin paint /()primer		Acid pickling
		Sill Guide Frame	1	13	13		(166)	132
		Sill Seal Plate & Rail (Chamber)	1	59	59		(388)	211
		Lower Wagon Rail (Gate Slot)	1	13	13		(333)	79
		Side Frame	1	13	13		(166)	132
		Upper Wagon Rail	1	48	48		(333)	79
	Sub Total			147	147		(1,386)	634
1 Set Total					4,007	32,319	(1,386)	634
2Set Total					8,014	64,639	2,772	1,267
Grand Total					24,617	197,646	10,967	4,973

2.2 Study Process

The Study works have been carried out in the following process.

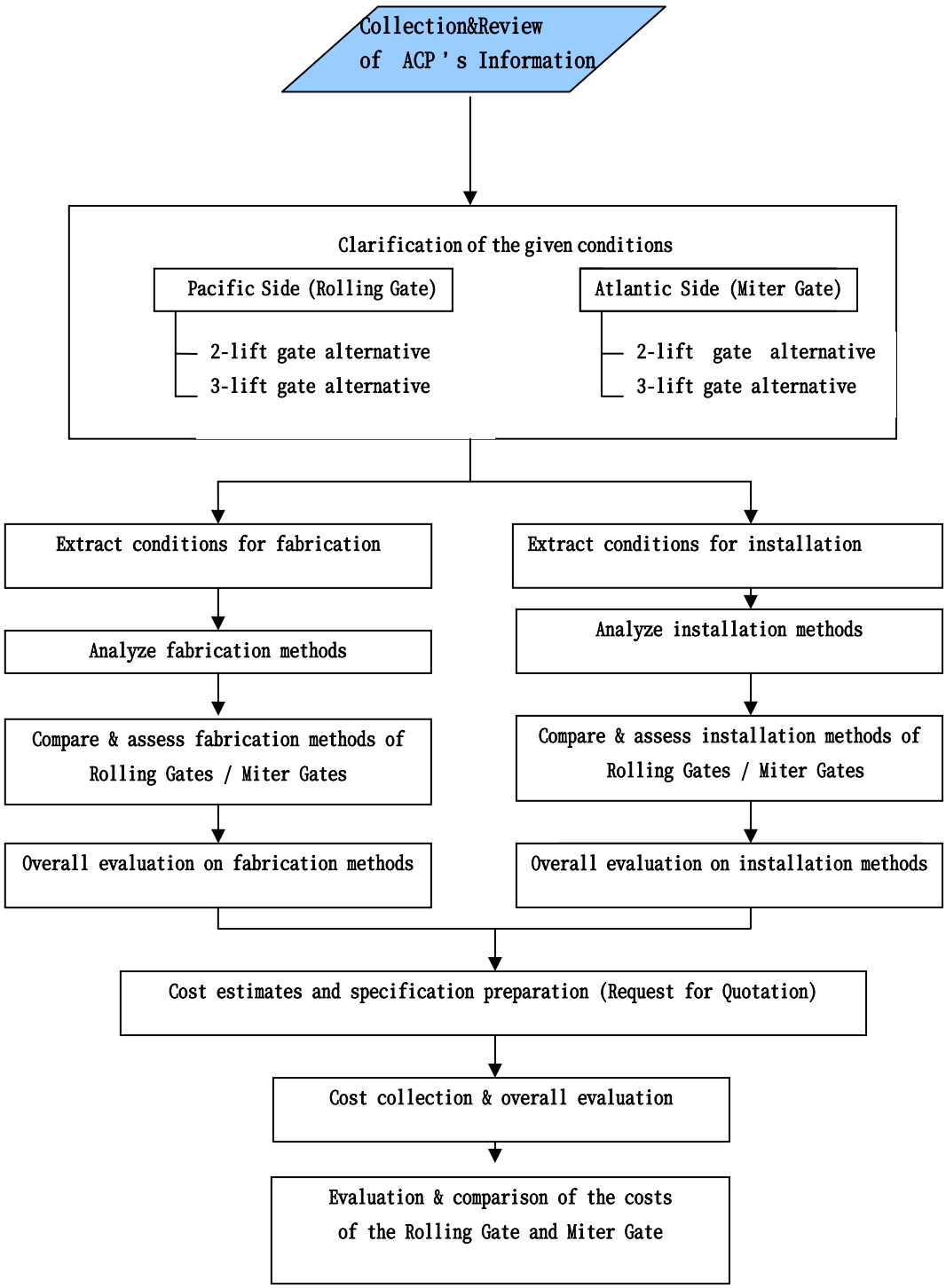

Fig.2.2-1 Flow Chart of General Work Plan

a) <u>One unit installation method</u>: To fabricate a gate leaf in one unit and to install the unit as a whole.

b) <u>Large block installation method</u>: To fabricate a gate leaf separately into some blocks and to assemble them in the construction (installation) site.

c) <u>Small block installation method</u>: To fabricate a gate leaf separately into many blocks and to assemble the parts in the construction (installation) site.

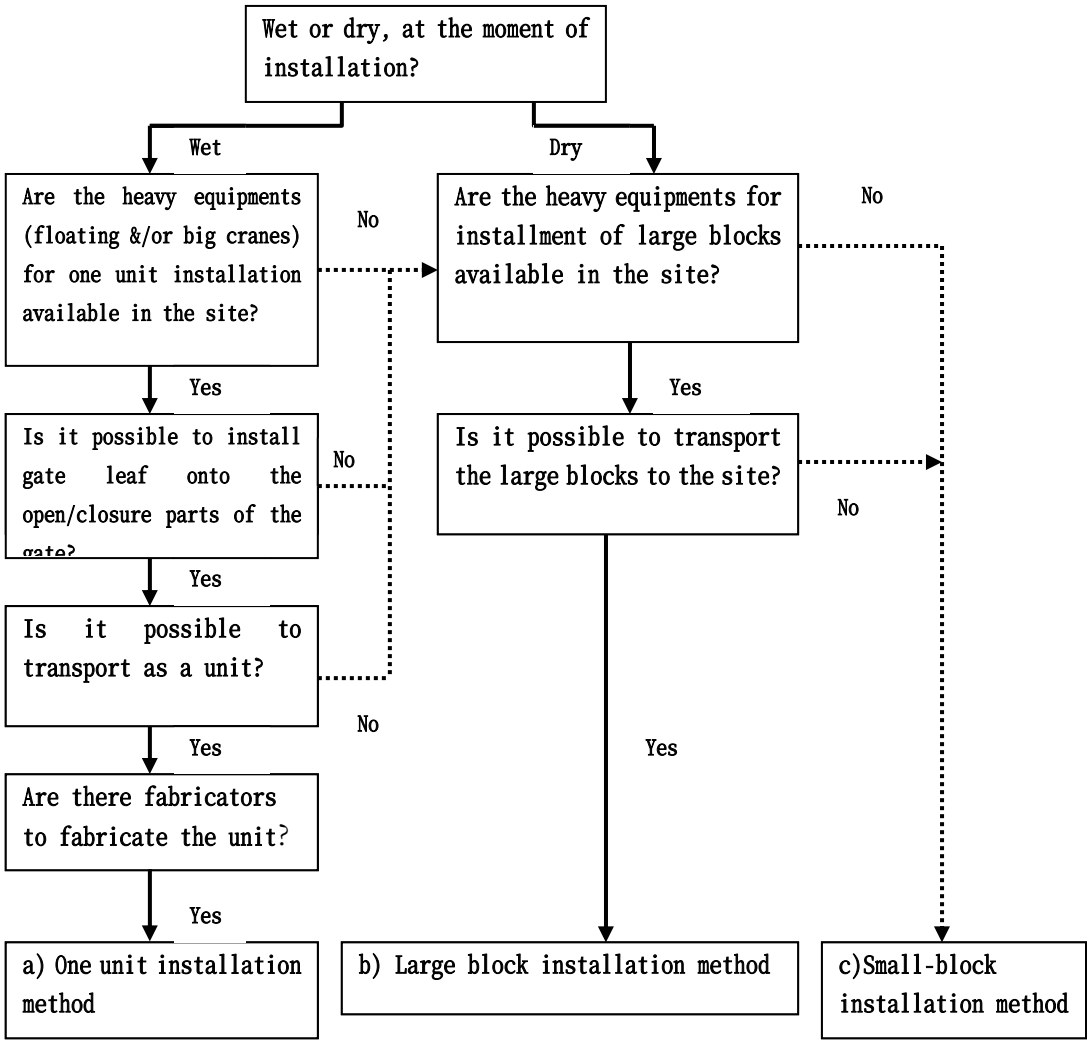

Fig2.2-2 Flow Chart of the Selection of Installation Methods

Step 1. Arrangement & Confirmation of Basic Elements

At the "Kick-off Meeting"

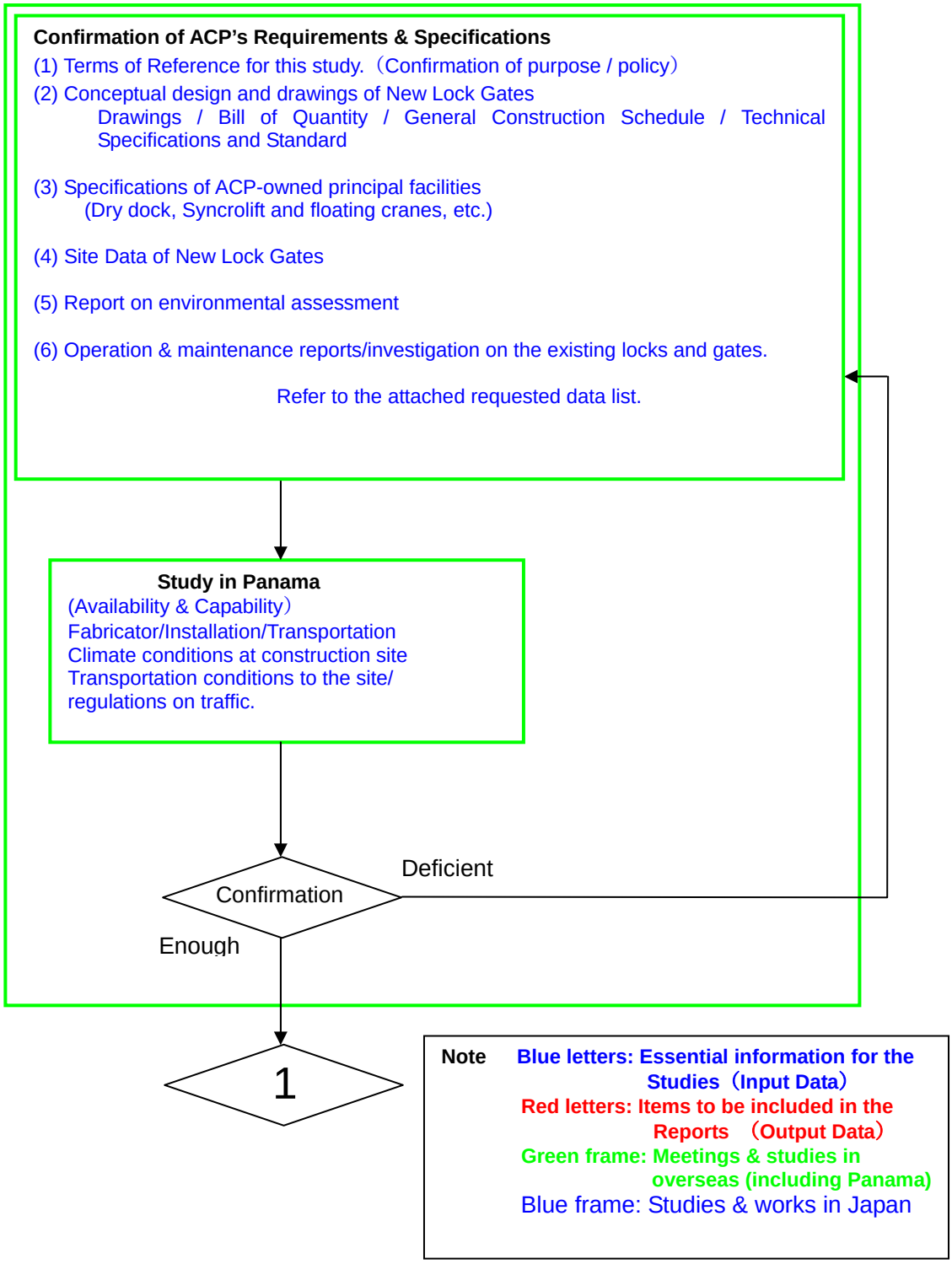

(To be continued to Step-2 Study of Fabrication & Installation of Gates)

Fig 2.2-3-1Flow Chart of Detailed Work Plan

Step 2. Study on Fabrication & Installation of Gates

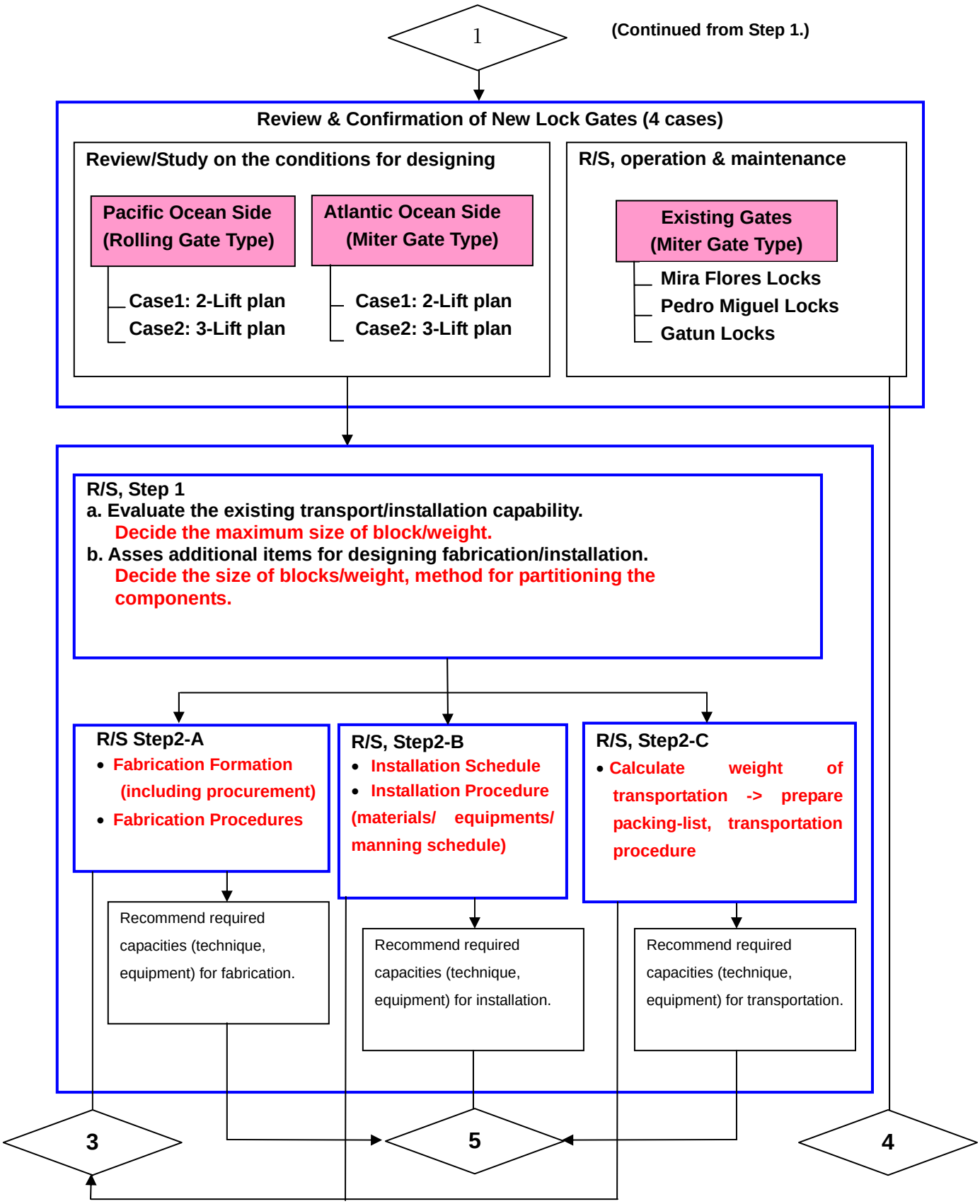

Fig2.2-3 –2 Flow Chart of Detailed Work Plan

Step 3. Preliminary Cost Estimates

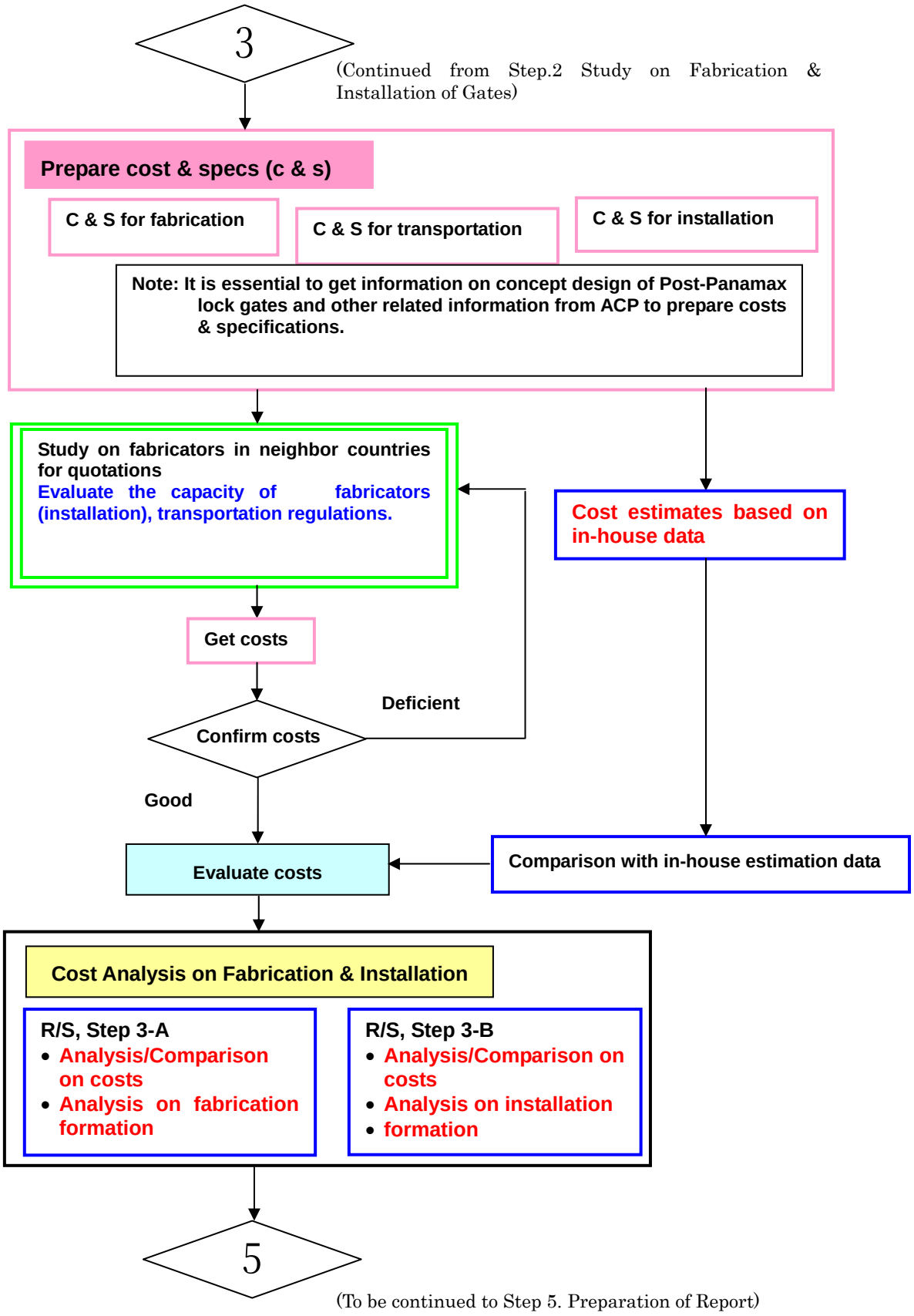

Fig2.2-3 –3 Flow Chart of Detailed Work Plan

Step 4. Study on Maintenance

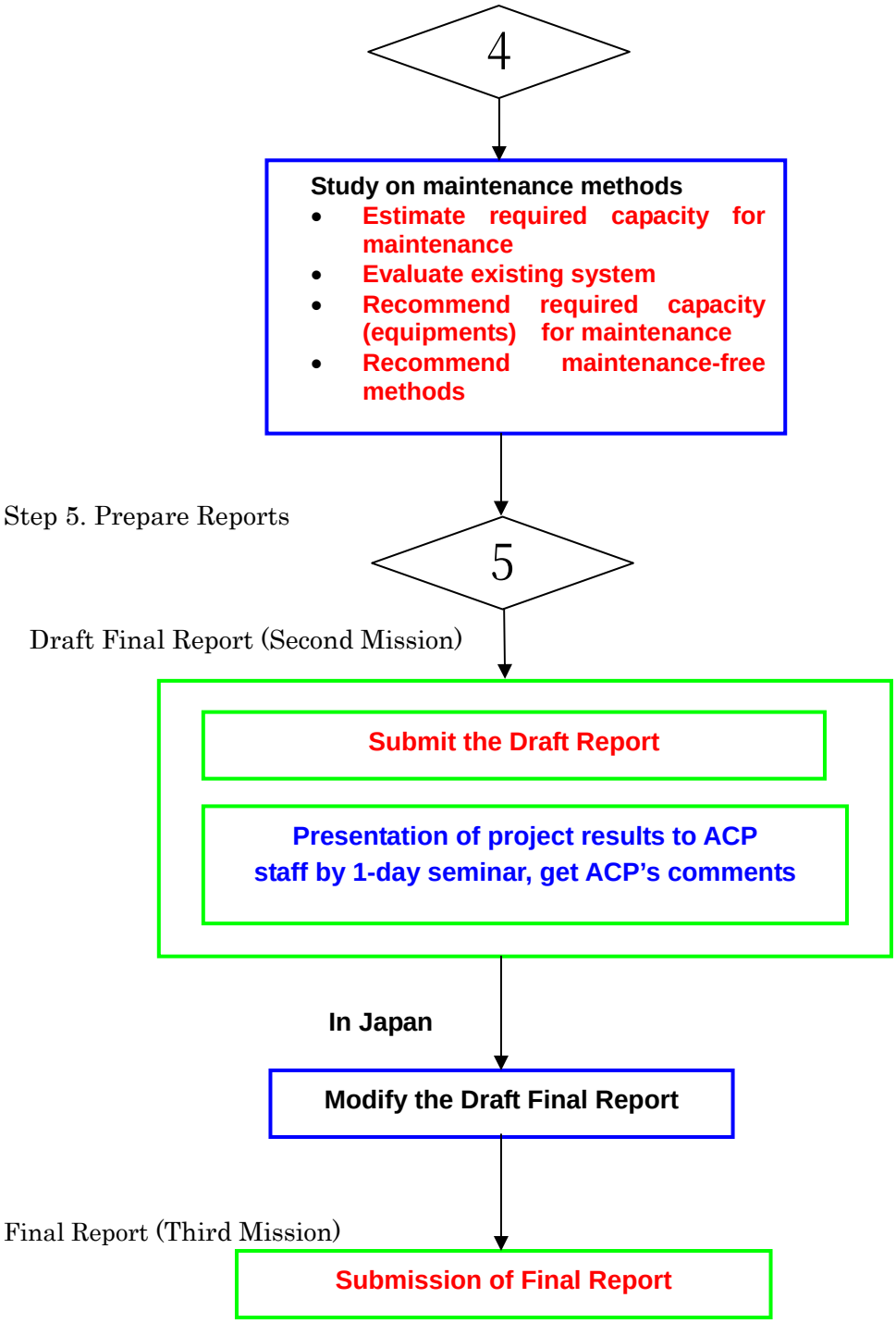

Fig2.2-3 -4 Flow Chart of Detailed Work Plan

2.3 Preconditions of the Study

We have selected a gate from each of the Miter Gate and the Rolling Gate, respectively, for future study works for fabrication, transportation, installation, and for cost estimates. The selected ones are the largest gates as follows:

Miter Gate : M-D3d,North gate, Double skin type

Clear Span:61.0m, Gate Height:34.5m,

Total Weight: 3,238 ton/set

(Gate Leaf Weight: 3,216 ton/set)

Rolling Gate : R-D3d, Double Skin type

Clear Span:61.0m, Gate Height:36.5m,

Total Weight: 4,730 ton/set
(Gate Leaf Weight: 4,580ton/set)

For cost estimates, the gravimetric sliding has been applied.

2.3.1 Design standard

We will execute our study of design, materials, fabrication and inspection based on the following standards:

(1) ASTM	(American Society for Testing and Materials)
(2) JIS	(Japanese Industrial Standard)
(3) DIN	(German Industrial Standard)
(4) EN／BS	(Euro Code /British Standard)
(5) ASME	(American Society of Mechanical Engineers)
(6) AWS	(American Welding Society)
(7) NF	(French Norm)
(8) ISO	(International Standardization Organization)
(9) SSPC	(Steel Structures Painting Council)

2.3.2 Materials Requirements

Major materials to be used for the fabrication of gates are shown below.

(1) Materials applied for Gates

Following materials will be applicable to the gate fabrication:

Designation		ASTM	JIS	EN/BS
(a)	Skin plates, gate arms and main girders	A36 A572M Grade 345	SS400 SM400 SM490 SM490Y	S235 J2G3 S275 J2G3 S355 J2G3
(b)	Guide frames	ASTM A36 A572M Grade 345	SS400 SM400 SM490 SM490Y	S235 J2G3 S275 J2G3 S355 J2G3

(2) General material (Major Materials)

(ASTM)

ASTM	A36	"Structural steel"
ASTM	A572M	"Structural steel"
ASTM	S30400	"Stainless steel"

(JIS)

JIS G3101	SS400	" Rolled steels for general structure "
JIS G3106	SM400, SM490	" Rolled steels for welded structure "
JIS G4304	SUS304	" Hot rolled stainless steel plate and sheets "

(EN)

EN10027-1	S235 J2G3	"Structural steel"
EN10027-1	S275 J2G3	"Structural steel"
EN10027-1	S355 J2G3	"Structural steel"
EN10088-1		"Stainless steel"

2.3.3 Welding

(a) Welding Procedure

All welding shall be done manually by the shielded metal arc process, or automatically by the shielded arc or submerged arc welding method.

All welding shall conform to the requirements of AWS Code.

Welding procedure qualification test shall be done in accordance with AWS or other approved standards.

(b) Welders and Welding Operators

All welders and welding operators assigned to the works shall have passed a qualification test within the preceding twelve (12) months in accordance with AWS or other approved standards. The qualification certificates of the welders and welding operators shall be submitted to the customer.

(c) Preparation for Welding

The surface of plates to be welded shall be free from rust, grease, and other foreign materials along the edges prepared for welding.

2.3.4 Painting

We will study the painting of the new lock gate based on the first field survey results, assuming that the same painting specification and conditions as in the present lock gates are adopted.

(a) Paint System

The painting specification shall be high build type tar epoxy resin paint.

Tar epoxy resin paint system consists of the following process:

Process	Paint	Standard film thickness	coating interval
Primer	Zinc-rich primer (organic)	20 micro meter	
			72 hrs. - 6 mths
1st.coat	Tar epoxy resin system	150 micro meter	
			24 hrs. - 7 days
2nd.coat	Tar epoxy resin system	150 micro meter	

(b) Painting Procedure

All gate equipment shall be painted as specified in the paint manufacturer's recommendations. No painting is required on bronze or stainless steel, on rolling or sliding surfaces, and metal surfaces to be machined except for mechanical equipment. All metal surfaces to be painted shall be cleaned and removed of rust, oil, dust, mortar or other foreign materials.

(c) Paint Application

The paint shall be applied to the field weld joints and the damaged parts of coating of all equipment. Finish painting shall be applied for operating devices, hydraulic cylinders and other equipment.

2.3.5 Inspection

The quality assurance shall be performed in accordance with ISO 9001 or ASME Quality Manual or contractor's quality assurance systems.

(a) Material test

The materials shall be tested in accordance with the following standards.

- ASTM (American Society for Testing and Materials)
- JIS (Japanese Industrial Standard)
- DIN (German Industrial Standard)
- EN／BS (Euro Code /British Standard)

(b) Pre-assembly test (Dimension Criteria)

Trial pre-assembly of the gate leaf shall be carried out and the records shall be submitted to the customer. The measurement inspection shall be made on all critical dimensions in the vertical and horizontal directions. Allowable tolerance of specified measurement items in the following tables shall be given by the equation:

$$\varepsilon = \varepsilon_0/2\ (1 + L/10)$$

whereas;

ε : Allowable tolerance (unit: mm)

ε_0 : Standard tolerance in 10 m shown in table (unit: mm)

ε_1 : Allowable tolerance unconcerned in length

L : Length of member (unit: m)

Table 2.3.5-1 Tolerance of Gate Leaf for Miter Gate

Measurement Items		Tolerance		Measurement Point
		ε0	ε1	
a	Width of gate leaf	8		Upper and lower
b	Height of gate leaf	8		Right and left
c	Difference in diagonal lengths of gate leaf	8		1 diagonal
d	Distances between main girders	6		
e	Distances between guide rails of right and left		8, -0	Upper and lower
f.	Height of guide frame	8		Right and left
g	Distance of between surfaces of sill ends	8		Right and left
h	Distance of between Seal surfaces		+2, -2	each 2m height
I	Flatness of Seal Surface		2.0/m	1m Pitch
j	Perpendicularity of Seal Surface		2.0	

Table 2.3.5-2 Tolerance of Gate Leaf for Rolling Gate

Measurement Items		Tolerance		Number of Measurement Point
		ε0	ε1	
a.	Width of gate leaf	8		Upper and lower
b.	Height of gate leaf	8		Right and left
c.	Difference in diagonal lengths of gate leaf	8		1 diagonal
d.	Distances between main girders	6		
e	Distances between guide rails of right and left		8, -0	Upper and lower
f.	Height of guide frame	8		Right and left
g.	Distance of between surfaces of sill ends	8		Right and left
h	Distance of between Seal surfaces		+8, -8	each 2m height
I	Flatness of Seal Surface		2.0/m	1m Pitch
j	Perpendicularity of Seal Surface		2.0	

In pre-assembly test, visual (including welding seam) and measurement inspection shall be carried out in customer's attendance. All the required function of the equipment shall be satisfied.

(c) Welding Test

Welded parts shall meet the requirements of "Radiographic Inspection of Welded Parts" prescribed in AWS. In the event of difficulty in making a judgment by radiographic inspection, the verdict shall be given by ultrasonic flaw detection tests.

(d) Painting Test

The Painting test shall be as follows:

- External appearance of painted surface
- Pinhole test for usually immersed surface
- Measurement of paint film thickness

The total thickness of the finished paint film shall be measured on more than three optical spots (four points per spot) in $10m^2$. The measurement results shall not be less than the specified thickness of paint.

(e) Water leakage test

The water leakage test is an important inspection item to affect the watering time of the lock gate.

The water leakage quantity is specified according to the necessary capabilities of the facilities, and no definite standards are applicable to the new lock gate.

It is, therefore, necessary to determine an allowable water leakage quantity in advance of executing the water leakage test.

2.3.6 Maximum transportation size

The maximum size transportable by a truck is of the 40ft dry container according to the traffic regulations of the Republic of Panama.

(Note) Exceptional measures such as special permission, etc. are not taken into consideration.

The maximum size of the 40-feet dry container is judged as transportable. The 40-feet dry container has two types with different sizes, i.e., normal size and high cube size

The general specifications of both the normal size and high cube size of 40-feet dry container are as shown below.

Table 2.3.4-1 40 feet Dry Container Normal Size (8'-6")

Container / Size		Aluminum		Steel		Max.
		Min.	Max.	Min.	Max.	
Inner size (mm)	Length	12,058	12,066	12,024	12,033	12,066
	Width	2,344	2,354	2,352	2,352	2,354
	Height	2,258	2,398	2,386	2,395	2,398
Gate opening size (mm)	Width	2,292	2,350	2,340	2,343	2,350
	Height	2,258	2,292	2,270	2,280	2,292
Inner volume (m^3)		63.8	68.1	67.5	67.7	68.1
Net weight (kg)		2,870	3,300	3,710	3,810	—
Maximum load (kg)		27,180	27,610	26,670	26,770	27,610

Table 2.3.4-2 40 feet Dry Container High Cube Size (9'-6")

Container / Size		Aluminum	Steel		Max.
		Min./Max.	Min.	Max.	
Inner size (mm)	Length	12,062	12,024	12,035	12,062
	Width	2,350	2,350	2,352	2,352
	Height	2,690	2,694	2,700	2,700
Gate opening size (mm)	Width	2,350	2,338	2,340	2,350
	Height	2,589	2,581	2,585	2,589
Inner volume (m^3)		76.2	76.2	76.4	76.4
Net weight (kg)		3,050	3,900	4,120	—
Maximum load (kg)		27,430	26,360	26,580	27,430

From the above specifications, we will carry out our study based on the following presumptions hereafter.

Maximum block size: 12,000mm long×2,300mm wide×2,500mm high

Maximum block weight: 26,000kg

3. Research of Panamanian Vender’s Capabilities

Chapter 3 Research on Panamanian Vendors' Capabilities

To survey the capabilities of fabrication and installation of vendors in the Republic of Panama, we will send our engineers to them to check by hearing through questionnaires.

In the questionnaires, the following items are included:

- Company's name
- Country
- Number of Employees
- Main Products
- Names of Major Customers
- Supply List of Hydraulic Gate Equipment
- Certification and/or Qualification (ISO, etc.)
- Qualifications of Welders & Welding Procedures
- NDT Personnel & NDT Procedure Qualification
- Facilities
- Annual Production Volume

  etc.

Some vendors were introduced by the ACP, and others have been filed by the Procurement Division of the Study Team. Any surveys have been executed after obtaining the ACP's prior authorization on disclosure of information.

3.1 Panamanian Vendors' Capabilities

We have surveyed four Panamanian venders' capabilities. Some of the results are described below;

M-1-1: ACP Shipyard

This ACP maintenance yard is engaged in the maintenance of existing gates. It is equipped with a dry dock (114m x 17m x 6m) and a synchrolift having a capacity of 1,200 tons for lifting vessels. The present miter gates are maintained by lifting them by using this synchrolift after surface towing.

The Shipyard has the expansion plans on the assumption of the repair of Post-Panamax Ship in the future, and the present synchrolift will also be reinforced to a capacity of at least 2,800 tons. However, since the water depth of the front water channel is about 10 meters, the entrance channel must be dredged when taking the maintenance of the rolling gate into account. As to the rolling gate maintenance, the usual maintenance shall be executed in the gate recess.

For fabricating the new lock gate, this shipyard will not be applicable because of a small dry dock size. This shipyard could be considered for fabrication of maximum block weight of 26,000 Kg as specified on the bottom of Page 2-27.

M-1-2: Astilleros Braswell, Intl, S. A.

This company located in Panama City is equipped with following three large dry docks to repair vessels as major jobs.

(1) 318m x 39m (2) 130m x 30.5m (3) 70m x 16.8m

These three dry docks can dock a vessel up to about a draft of 4 ~ 8m only due to a shallow draft. A normal high tide is utilized for docking a vessel, and the maximum draft of docking-enabled vessels is about 15m. While this company will be utilizable for fabricating new lock gate, certain restrictions are present as described later. As to welding, 110 Panamanian welders, 90 Colombians, and others from other counters are available. However, electrodes can be used up to φ3.2mm only to cause poor efficiency. It will be necessary to send supervisors for fabrication of gate equipment. A 60-ton ceiling crane is mounted in the fabrication plant. The production capacity of this fabrication plant is not enough to manufacture in this project and it is estimated to be about 20 tons / month only.

M-1-3: Constructora Urbana, S.A. (CUSA)

This is the largest general construction firm in Panama. However, this company has no experience in fabricating hydraulic gates, steel structures, etc., so that these jobs are subcontracted as occasion demands. This company has no experience in installing water gates, so that at least supervisors and other personnel should be furnished through special contract. This company can be utilized through technical guidance and personnel training.

M-1-4: Empresas HOPSA, S.A.

This Panamanian largest steel frame manufacturer has a share of 50% in the Panamanian market. This company has the top welding capabilities in Panama as a company being accredited by AWS. This company has fabrication experiences of small scale bridges and conduit pipes of Chiriqui dam in Panama.

Results of Panamanian vendors' capabilities research are as described in Table 3.1.-1 below.

Table 3.1-1 Panamanian Venders' Capabilities

No.		M-1-1	M-1-2	M-1-3	M-1-4
Company's Name		ACP Shipyard	Astilleros Braswell Intl, S. A.	Constructora Urbana,S.A. (CUSA)	Empresas HOPSA, S. A.
Country		Republic of Panama	Republic of Panama	Republic of Panama	Republic of Panama
Number of Employees		-	200 - 700		434
Number of Employees of Each Section	Design	-	-		9
	Manufacturing	-	-		122
	Construction	-	-		-
	QA/QC	-	-		2
Main Products		Ship Repair	Ship Repair		Steel Structures
Name of Major Customers		ACP	MANY SHIP COMPANIES		ACP, SKANSKA, COPISA
Supply List of Hydraulic Gate Equipment		None	None	None	None
Certifications and/or Qualifications (ISO, etc.)		-	None	None	None
Qualifications of Welders & Welding Procedure		-	-	-	-
NDT Personnel & NDT Procedure Qualification		-	-	-	-
Facilities (m^2)	Manufacturing Area	Dock 114m x 17m x 6m	12,000 No.1 dock 318mx39(33.6)mx7.9m No.2 dock 130mx30.5(25.9)mx6.4m No.3 dock 70mx16.8(16.8)mx4.3m ( ) shows entrance width		13,000
	Office Area		1,000		1,800
	Other Area				29,000
	Total Area		13,000		43,800
Evaluation Advisability of Fabrication or Installation	Present Condition				
	The Future				
Annual Production (ton/Year)					
Remarks					

Please refer to the attached data on venders' catalogs in detail.

4. Construction Method of the New Lock Gates

Chapter 4. Construction Method of the New Lock Gates

We have extracted the construction methodology commonly applicable to the fabrication, transportation and installation of Miter Gate and Rolling Gate in 2-Lift and 3-Lift types of configuration for the New Lock Gates. In this process, we have analyzed the study results of USACE and CPP provided by the ACP, surveyed local ports and private dry dock facilities to access the practicable methods of fabrication, transportation and installation.

Finally, we have categorized them into the three groups named Study Cases (I), (II) and (III) for both of the Miter Gate and the Rolling Gate, respectively, as described below. As each of the Miter Gate and the Rolling Gate has two configurations (2-Lift and 3-Lift), the total number of Study Cases becomes 12.

In this Chapter 4, we introduce outline on each Study Case. More detailed descriptions on fabrication, transportation and installation methods are made in Chapter 5, 6, and 7, respectively.

4.1 Miter Gate

For the Miter Gate, the three Study Cases have been categorized; The Study Case (I) is the “one-unit” construction methodology. The gate leaves are fabricated in “one-unit” gate leaves outside Panama, then transported by semi-submersible vessel to the site, and the “one-unit” gates are installed in wet (the channel of the Canal is watered) condition.

The Study Case (II) is the “block and one-unit” construction methodology. The gate leaves are fabricated outside Panama in blocks taking into consideration of land transportation limitations in Panama, transported by vessels to a port of Panama, forwarded there from by trucks to a dry dock in Panama, where the blocks of divided gate leaves are assembled into one unit. The assembled “one-unit” leaves are towed by tugboats to the site for installation in wet condition.

The Study Case (III) is the “block installation” construction methodology. The gate leaves are fabricated outside Panama in blocks taking into consideration of land transportation limitations in Panama, transported by vessels to a port of Panama, forwarded by trucks to the construction site of the Canal. The blocks of divided gate leaves are assembled and installed on site in dry condition.

Table 4.1.1 Study Cases for Miter Gate

Miter Gate, 2-Lift and 3-Lift			
Study Case	(I)	(II)	(III)
Fabrication Method	***One-unit Fabrication:*** (1) Block fabrication, outside Panama	***Block Fabrication:*** Block fabrication, outside Panama	***Block Fabrication:*** Block fabrication, outside Panama
	(2) Yard assembly of blocks into "one-unit", outside Panama	-	-
Transportation Method	***One-unit Transportation:*** One-Unit transportation by semi-submersible vessel to a port of Panama	***Block Transportation:*** Blocks to be transported by vessel to a port of Panama, and forwarded by truck to a dry dock in Panama	***Block Transportation:*** Blocks to be transported by vessel to a port of Panama, and forwarded by truck to the site in Panama
Installation Method	-	***Dry dock Assembly:*** Blocks to be assembled into "One-unit" at a dry dock in Panama	***Chamber Assembly:*** Blocks to be assembled into "One-unit" at a chamber in Panama
	One-unit Towing: One-unit to be towed by tugboat to the site in Panama	***One-unit Towing:*** One-unit to be towed by tugboat to the site in Panama	-
	One-unit Installation: One-unit installation in wet condition	***One-unit Installation:*** One-unit installation in wet condition	***Block Installation:*** Block installation on site (chamber) in dry condition
Remark	USACE's method		

Construction Flow for Miter Gate (Fig.4.1.1) is shown in the following pages.

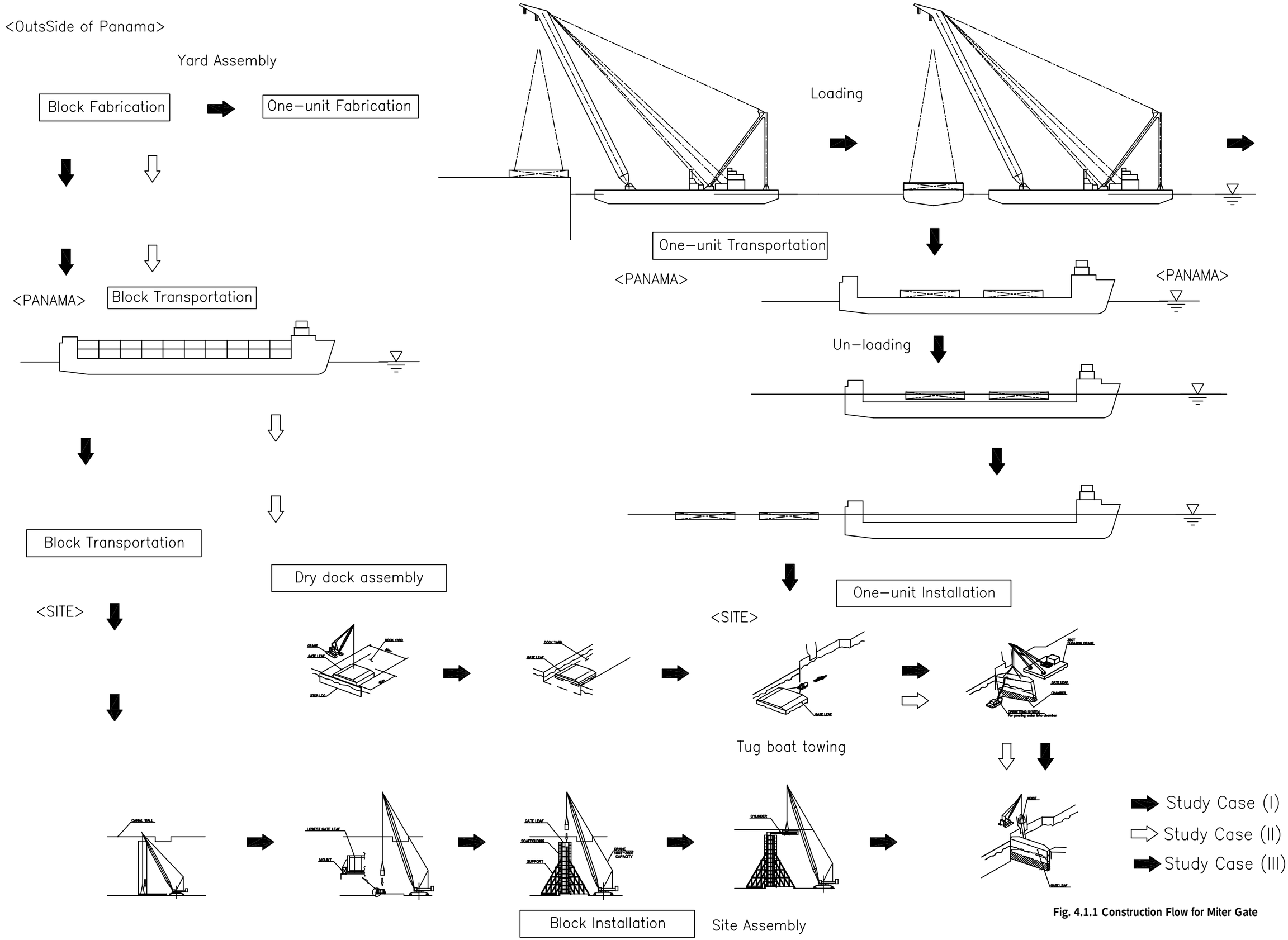

Fig. 4.1.1 Construction Flow for Miter Gate

a. Study Case (I)

This Study Case is the “One-unit” construction methodology.

This construction methodology is described in the concept study of USACE.

The general flow chart and step diagrams are as follows.

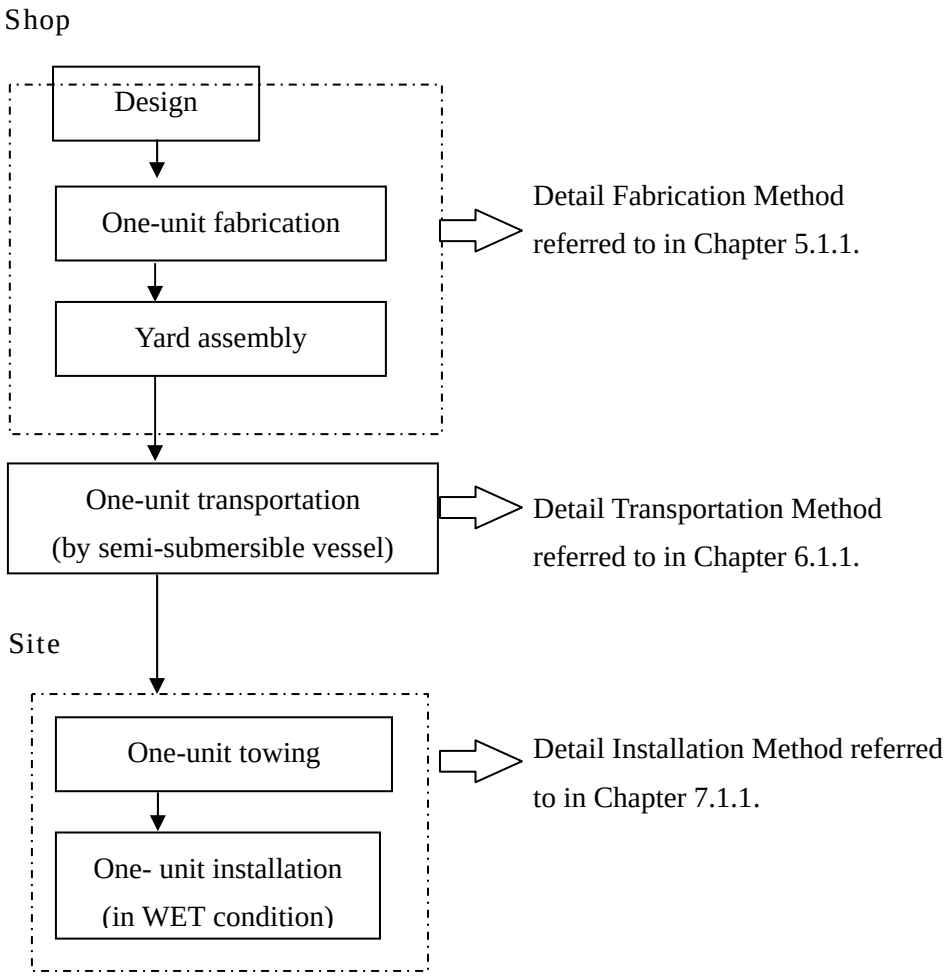

Fig.4.1.2 General flow chart for Study Case (I)

b. Study Case (II)

This Study Case is the “Block & One-unit” construction methodology. The divided blocks are fabricated outside Panama, and the blocks are transported to a port of Panama by vessels. The divided blocks are assembled in a dry dock in Panama into “one-unit.” The “one-unit” gate is towed by tugboats to the site for installation in wet condition.

General flow of the construction and step diagram are as follows:

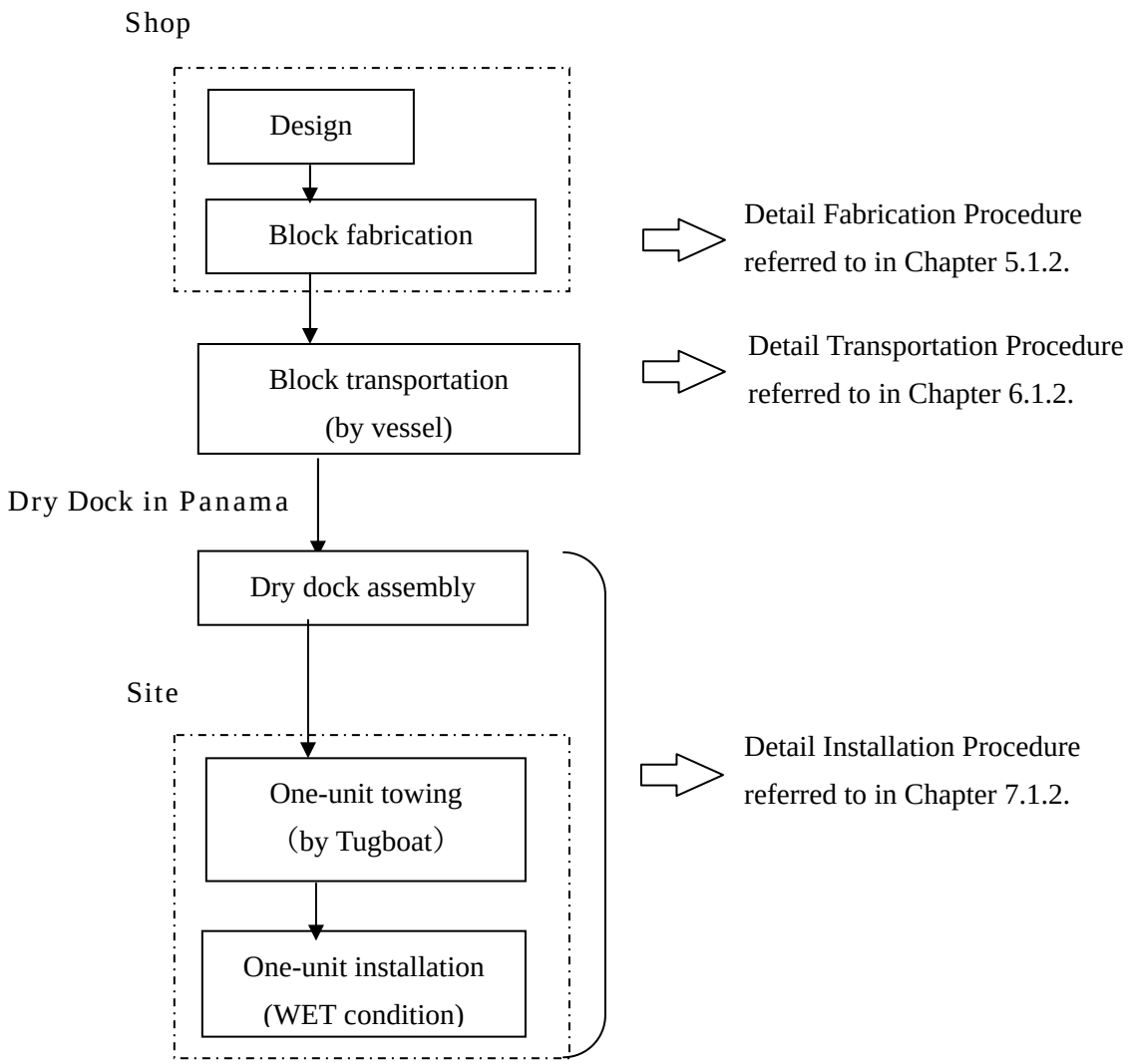

Fig.4.1.3 General flow chart of Study Case (II)

c. Study Case (III)

This Study Case is the "Block & Site Assembly, Installation" construction methodology. The gate leaves are fabricated outside Panama in blocks taking into consideration of land transportation limitations in Panama, transported by vessels to a port of Panama, forwarded by trucks to the construction site of the Canal. The divided gate leaves are assembled and installed on site (chamber) in dry condition.

General flow of the construction and step diagram are as follows:

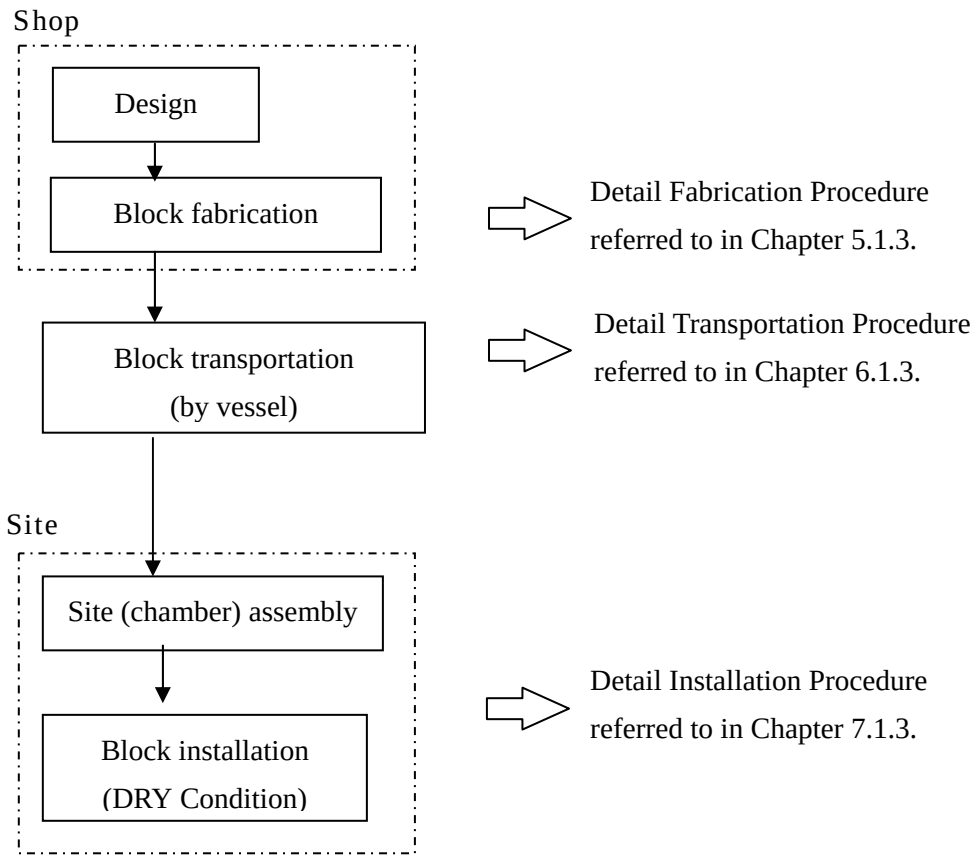

Fig.4.1.4 General flow chart for Study Case (III)

4.2 Rolling Gate

For the Rolling Gate, the three Study Cases have been categorized; The Study Case (I) is the “one-unit” construction methodology. The gate leaves are fabricated in “one-unit” gate leaves outside Panama, then transported by semi-submersible vessel to the site, and the “one-unit” gates are installed in wet (the channel of the Canal is watered) condition.

The Study Case (II) is the “block and one-unit” construction methodology. The gate leaves are fabricated outside Panama in blocks taking into consideration of land transportation limitations in Panama, transported by vessels to a port of Panama, forwarded there from by trucks to a dry dock in Panama, where the blocks of divided gate leaves are assembled into one unit. The assembled “one-unit” leaves are towed by tugboats to the site for installation in wet condition.

The Study Case (III) is the “block installation” construction methodology. The gate leaves are fabricated outside Panama in blocks taking into consideration of land transportation limitations in Panama, transported by vessels to a port of Panama, forwarded by trucks to the construction site of the Canal. The blocks of divided gate leaves are assembled and installed on site in dry condition.

Table 4.2.1 Study Cases of Rolling Gate

Rolling Gate, 2-Lift and 3-Lift			
Study Case	(I)	(II)	(III)
Fabrication Method	***One-unit Fabrication:*** (1) Block fabrication, outside Panama	***Block Fabrication:*** Block fabrication, outside Panama	***Block Fabrication:*** Block fabrication, outside Panama
	(2) Yard assembly of blocks into "one-unit", outside Panama	-	-
Transportation Method	***One-unit Transportation:*** One-unit transportation by semi-submersible vessel to a port of Panama	***Block Transportation:*** Blocks to be transported by vessel to a port of Panama, and forwarded by truck to a dry dock in Panama	***Block Transportation:*** Blocks to be transported by vessel to a port of Panama, and forwarded by truck to the site in Panama
Installation Method	-	***Dry dock Assembly:*** Blocks to be assembled into "One-unit" at dry dock in Panama	***Recess Assembly:*** Blocks to be assembled into "One-unit" at a recesses in Panama
	One-unit Towing: One-unit to be towed by tugboat to the site in Panama	***One-unit Towing:*** One-unit to be towed by tugboat to the site in Panama	-
	One-unit Installation: One-unit installation in wet condition	***One-unit Installation:*** One-unit installation in wet condition	***Block Installation:*** Block installation on site (recesses) in dry condition
Remark		CPP's method	

Construction Flow for Rolling Gate (Fig.4.2.1) is shown in the following pages.

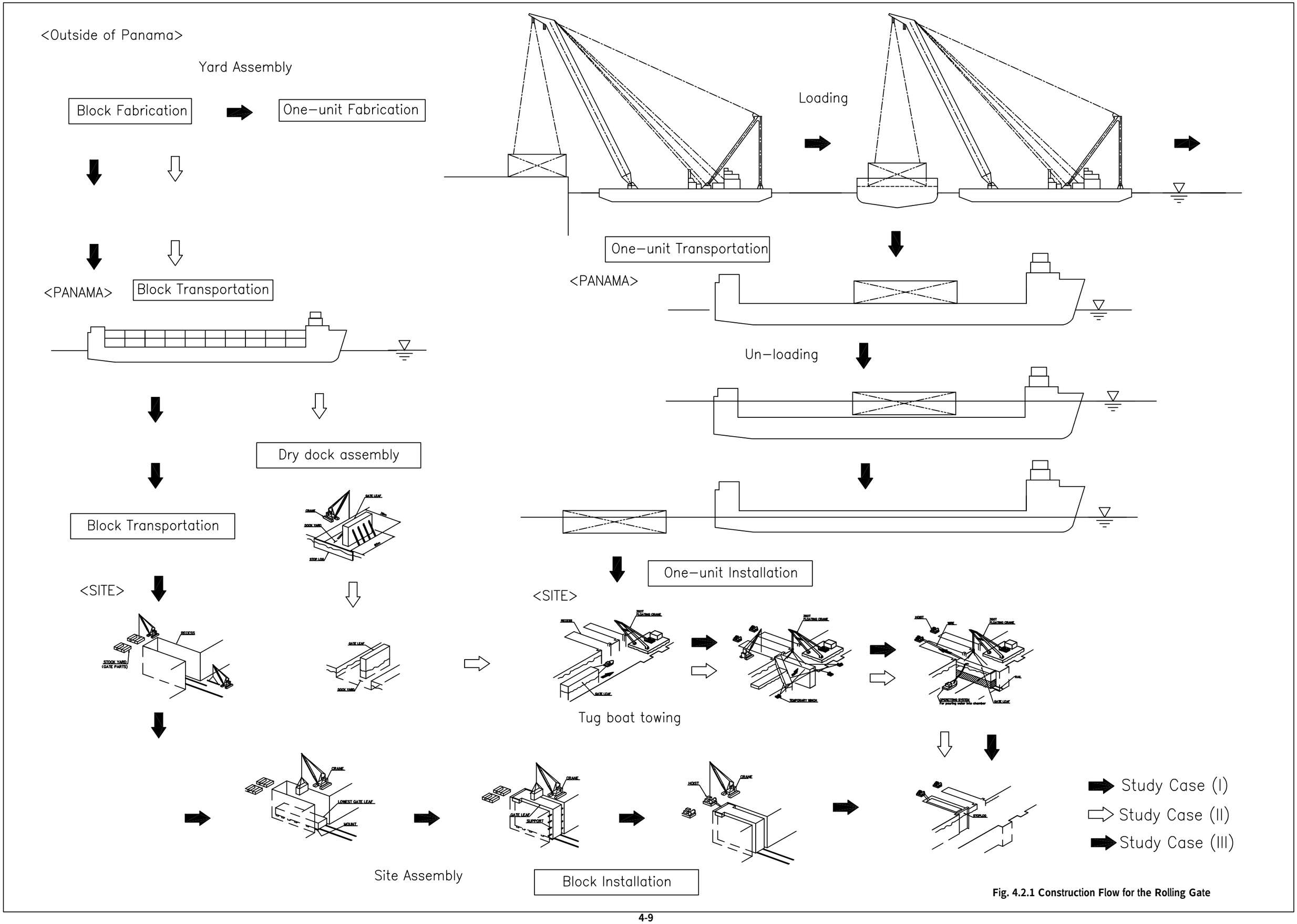

Fig. 4.2.1 Construction Flow for the Rolling Gate

a. Study Case (I)

This Study Case is the "One-unit" construction methodology. The general flow chart and step diagrams are as follows:

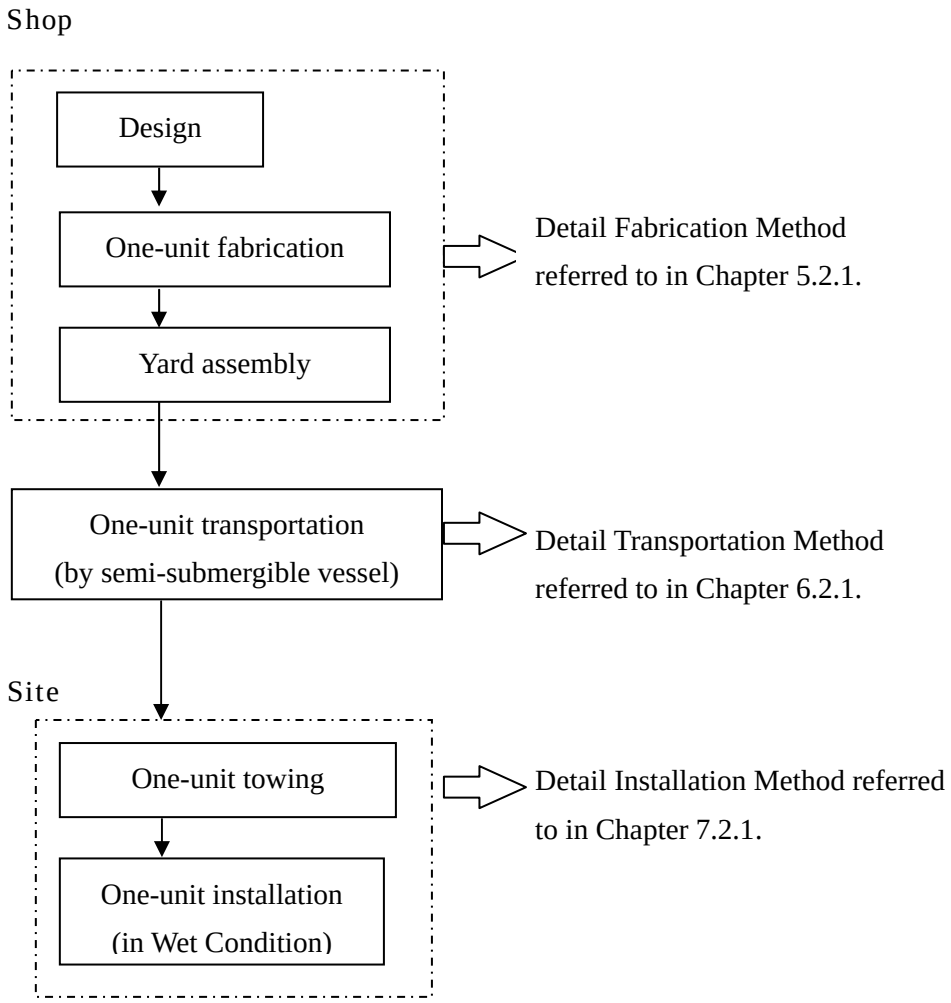

Fig.4.2.2 General flow chart for Study Case (I)

b. Study Case (II)

This Study Case is the “Block & One-unit” construction methodology. The divided blocks are fabricated outside Panama, and the blocks are transported to a port of Panama by vessels. The divided blocks are assembled in a dry dock in Panama for “one-unit.” The “one-unit” gate is towed by tugboat to the site for installation in wet condition.

This construction methodology is described in the concept study of USACE.

General flow of the construction and step diagram are as follows:

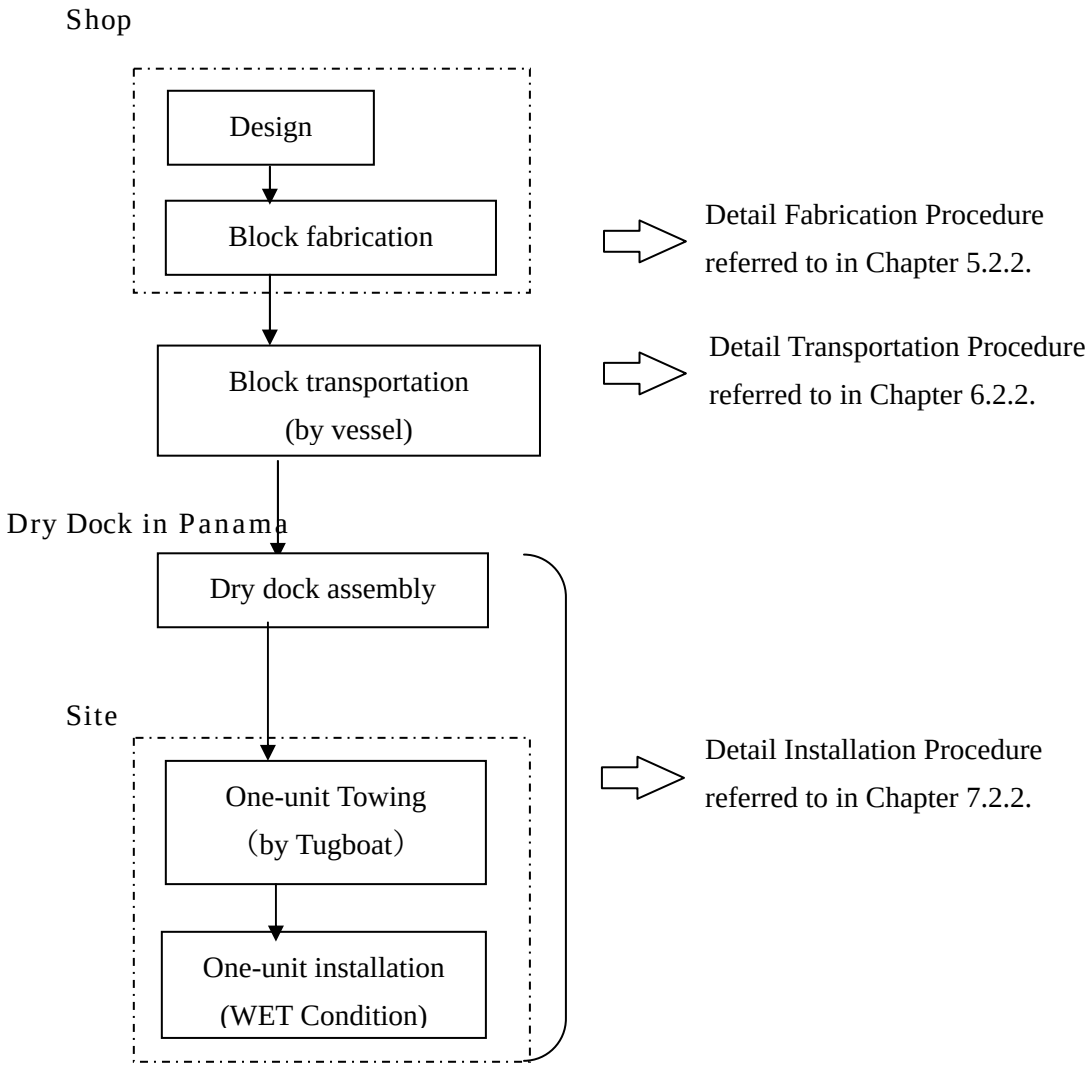

Fig.4.2.3 General flow chart for Study Case (II)

c. Study Case (III)

This Study Case is the "Block & Site Assembly, Installation" construction methodology. The gate leaves are fabricated outside Panama in blocks taking into consideration of land transportation limitations in Panama, transported by vessels to a port of Panama, forwarded by trucks to the construction site of the Canal. The divided gate leaves are assembled and installed on site (recesses) in dry condition.

General flow of the construction and step diagram are as follows:

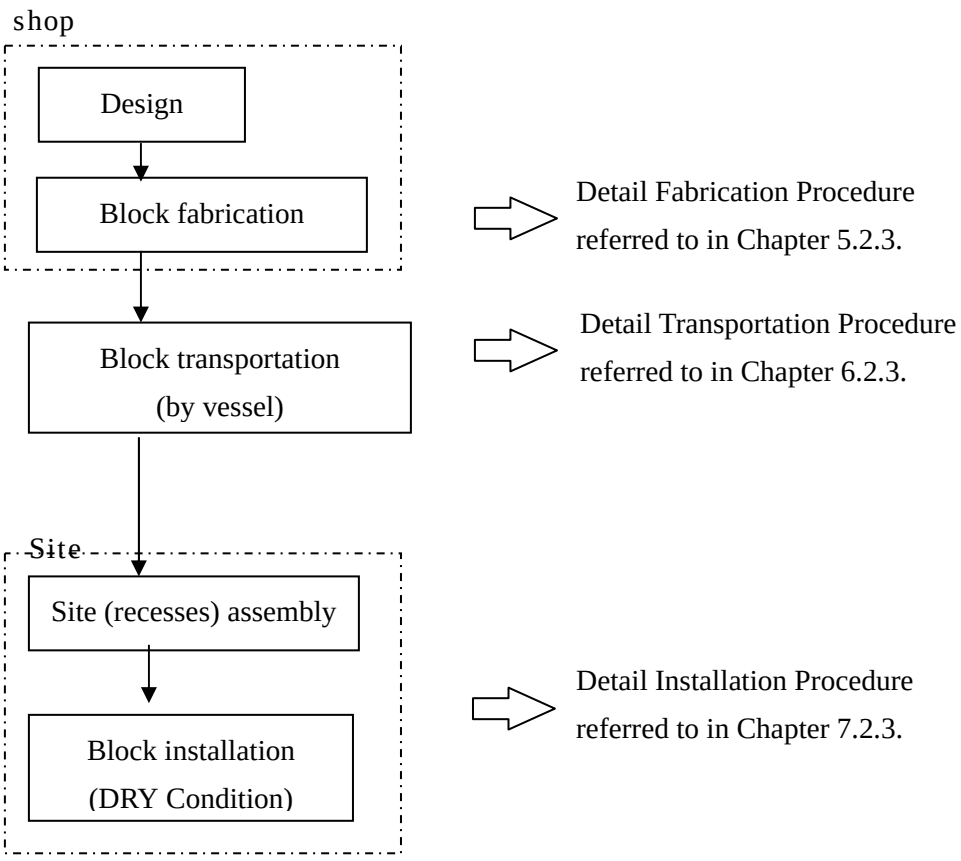

Fig.4.2.4 General flow chart for Study Case (III)

5. Fabrication Method

Chapter 5 Fabrication Methods

A. Study Cases of Fabrication Methods

As described in Chapter 4, we have studied the fabrication methods on assumption of the cases shown in Table 5-1 and Table 5-2.

This study applies to the fabrication methods of Miter Gates on the Atlantic Ocean side and Rolling Gates on the Pacific Ocean side, each of 2-lift and 3-lift configurations, shown in the concept design, and, therefore, covers 12 cases in total.

Table 5-1 Study Cases of Miter Gate

Fabrication of Miter Gate		
	Fabrication Methods	Execution Conditions
Study Case (I)	One-unit Fabrication	• Gate leaf is fabricated outside Panama. • Gate leaf is assembled into one-unit in the process of yard assembly. • The assembled gate leaf is transported to Panama by a semi-submersible vessel. • The assembled gate leaf is loaded into the semi-submersible ship by means of a floating crane as the basis. • The assembled gate leaf is installed at site. • The gate leaf is installed under the wet condition after the completion of concrete works of the canal.
Study Case (II)	Block Fabrication	• Gate leaf is fabricated outside Panama. • Gate leaf block divisions must be decided to meet their transport limit in Panama. • The divided gate leaves are transported to Panama by a vessel. • The divided gate leaves are assembled at a dry dock in Panama, and the one-unit gate leaf is installed at site. • The gate leaf is installed under the wet condition after the completion of concrete works of the canal.
Study Case (III)	Block Fabrication	• Gate leaf is fabricated outside Panama. • Gate leaf block divisions must be decided to meet their transport limit in Panama. • The divided gate leaves are transported to Panama by a vessel. • The divided gate leaves are assembled in Panama at the recess. The gate leaf shall be installed at a dry place.

Table 5-2 Study Cases of Rolling Gate

Fabrication of Rolling Gate		
	Fabrication Methods	Execution Conditions
Study Case (I)	On-unit Fabrication	• Gate leaf is fabricated outside Panama. • Gate leaf is assembled into one-unit in the process of yard assembly. • The assembled gate leaf is transported to Panama by a semi-submersible vessel. • The assembled gate leaf is loaded into the semi-submersible vessel by means of a floating crane as the basis. • The one unit gate leaf is installed at site. • The gate leaf is installed under the wet condition after the completion of concrete works of the canal.
Study Case (II)	Block Fabrication	• Gate leaf is fabricated outside Panama. • Gate leaf is fabricated to the blocks being divided within the transport limit in Panama. • The divided gate leaves are transported to Panama by a vessel. • The divided gate leaves are assembled at a dry dock in Panama, and the one-unit gate leaf is installed at site. • The gate leaf is installed under the wet condition after the completion of concrete works of the canal.
Study Case (III)	Block Fabrication	• Gate leaf is fabricated outside Panama. • Gate leaf is fabricated to the blocks being divided within the transport limit in Panama. • The divided gate leaves are transported to Panama by a vessel. • The divided gate leaves are assembled in Panama at the chamber. The gate leaf shall be installed at a dry place.

The Study Results of Fabrication Methods in Each Case

We have studied the fabrication methods in each study case categorized in Table 5-1 and Table 5-2, and outlined the fabrication procedures, the flow chart (step diagram) and the fabrication schedules for 2-lift and 3-lift configurations of the miter gate and rolling gate described in the concept designs.

B. Fabrication Flow Chart

The basic fabrication flow common to each study case is shown below.

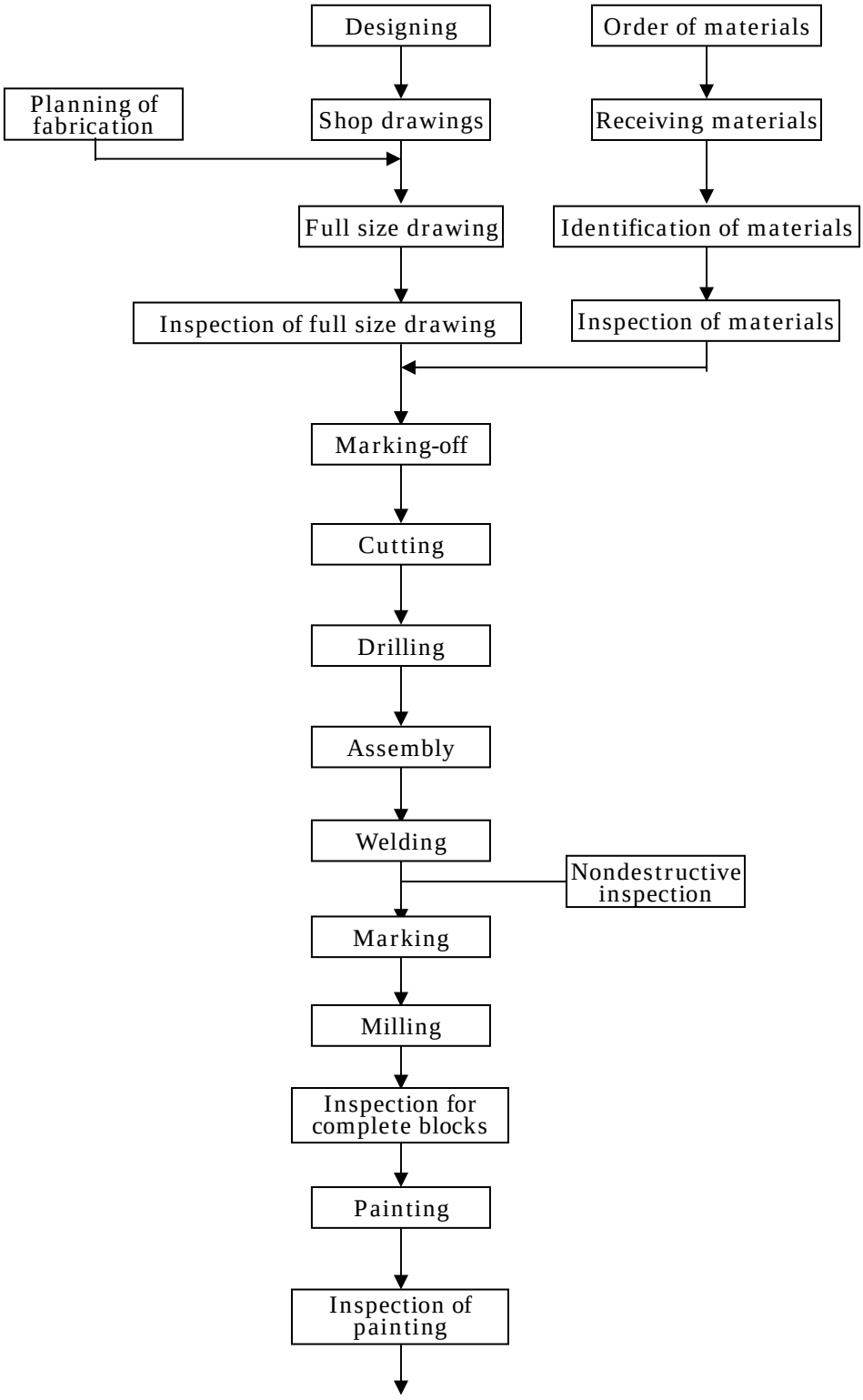

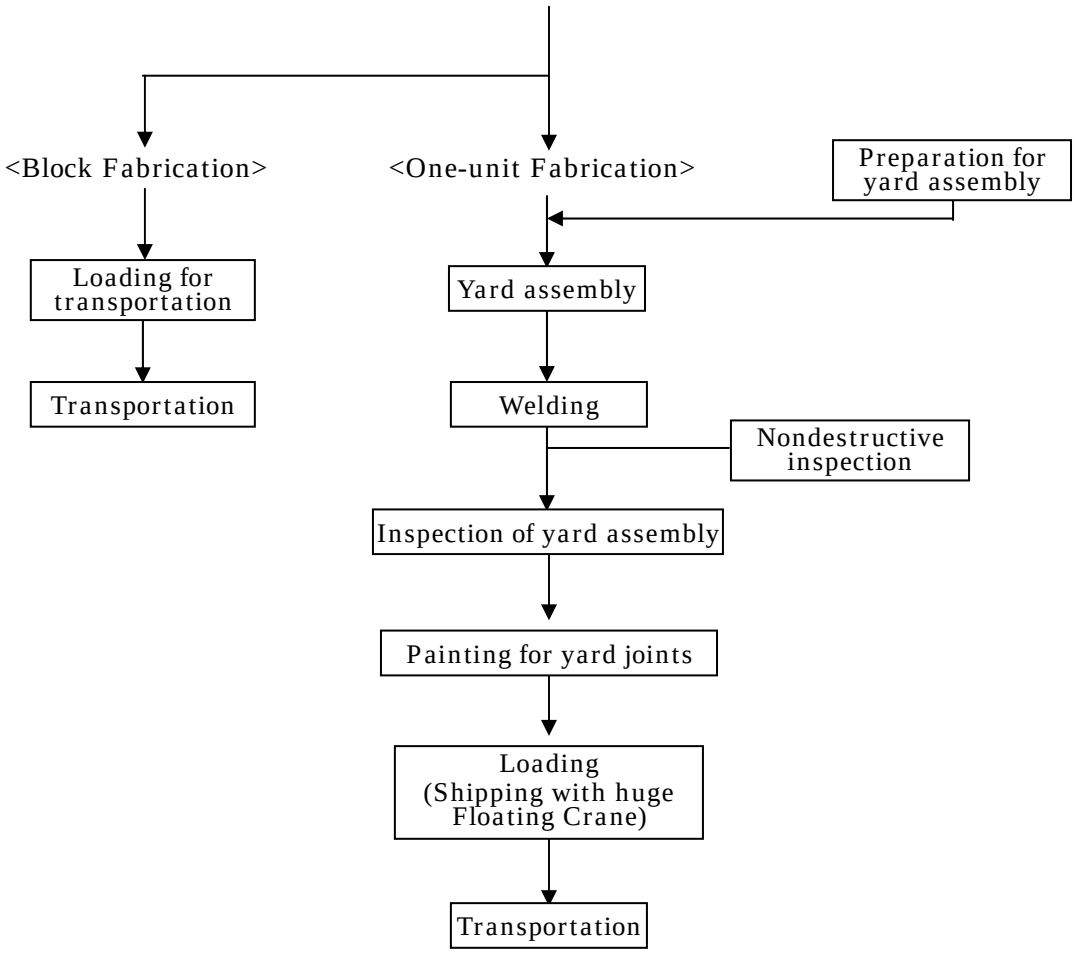

(Notes on the Above Job Descriptions)

(a) Full Size Drawings

Full size drawing shall be drawn according to shop drawings approved by the Engineer and shall be checked by shop QA personnel.

NC data provide member dimensions, bolt diameter, pitch, quantities of holes, and positions of other plates and so on. Marking accuracy shall not be greater than 0.5mm.

(b) Marking-Off

Marking-off on steel plates and shapes shall be done by NC machines automatically or shall be done manually.

Markings shall be inscribed clearly and carefully so as to keep accuracy especially using rulers or templates. Marking accuracy shall not be greater than 0.5mm.

(c) Cutting

In principle, the steels shall be cut by the use of a mechanical guide to secure an accurate profile and to provide a smooth surface free from cracks or notches.

(d) Drilling

Drilling shall be done according to a steel template with hardened bushings or shall be performed with NC drilling equipment.

(e) Welding

Welding work shall be performed after checking about following items so as to satisfy the required quality of joint in accordance with the Welding Procedure:

1) Grade and characteristics of steel
2) Welding method, groove type, welding materials and their characteristics
3) Accuracy of fabrication and assembly of the parts to be welded
4) Desiccation of welding materials
5) Welding conditions and welding sequence

Shop welding shall be executed indoors or under equivalent conditions.

(f) Loading

The fabricator of the gate equipment must make certain that gate leaves and structural members are loaded in a manner that they will not be damaged in shipment.

5.1 Miter Gate

5.1.1 One-unit fabrication

A. Outline of Fabrication Procedures

For fabricating the Miter Gate as one-unit, the following items must be fully studied before starting fabrication.

(a) Study of Block Divisions Conforming to the Fabrication Shop

How to increase the work in a shop having good handling and welding conditions results in the reduction of the entire processes including the yard assembly. Block divisions each containing more section members will facilitate the profile control when assembling blocks and will improve the fabrication efficiency. In case of the Miter Gate, the block divisions each containing two horizontal girders in one block has been set for the purpose of eliminating the yard joints to the horizontal girders as much as possible, facilitating the block assembly, and suppressing the welding distortion as much as possible. (Fig.5.1.1-1)

(b) Selection of Yard for Yard Assembly

Since one-unit fabrication requires outdoor assembly work, the following items must be studied:

① Study of the block transportation to the yard for yard assembly and handling machine in the yard
② Study of welding machine and power supply in the yard
③ Study of the bearing capacity in the yard for yard assembly
④ Moving and transporting methods of large blocks from the yard

B. Fabrication Flow Chart (Step Diagram)

Fig.5.1.1-2 ~ 5.1.1-4 show the fabrication flow chart in one-unit fabrication.
For fabrication, the block method is basically adopted by taking the handling in the plant and yard assembly processes into account. Fig.5.1.1-2 shows the flow chart of the gate leaf center block, and Fig.5.1.1-3 shows the flow chart of the block assembly method on the right and left side blocks of the gate leaf.
Since the assembly at the both sides of gate leaf is complicated, the assembly procedure and welding execution characteristics must be fully studied in advance. In yard assembly, it is desirable to place the upstream side upward. Accordingly, blocks are started assembling by placing the upstream side downward in the shop.
The block assembling sequence in yard assembly is described in Fig.5.1.1-4. These blocks are assembled horizontally in case of miter gate. One-unit assem-

bly is done by specifying the center block at the bottom stage of the gate leaf as the base point. For the gate leaf, lower, right, and left cut-off lines of the gate leaf serve as important control points, so that the blocks are assembled while checking three sides by using a transit or the like at all times as illustrated. The pintle sockets and other shafts are basically assembled when fabricating blocks. However, it is easy for fabricating blocks to adopt such a method as can adjust the alignment to the gate leaf in the course of yard assembly.

C. Fabrication Schedule

Fig.5.1.1-5 shows the fabrication schedule in one-unit fabrication.

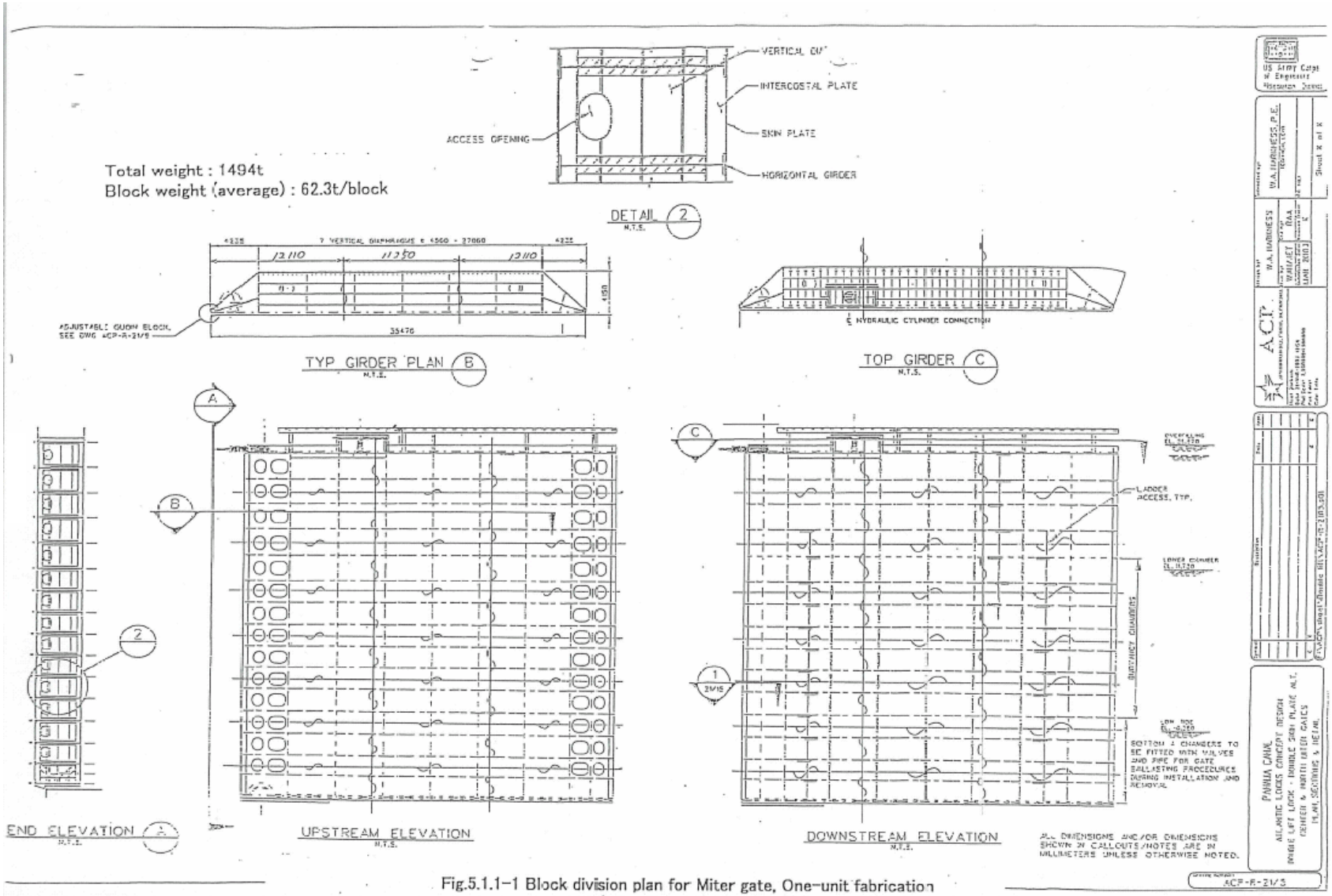

Fig.5.1.1-1 Block division plan for Miter gate, One-unit fabrication
(Miter Gate, Study Case (I))

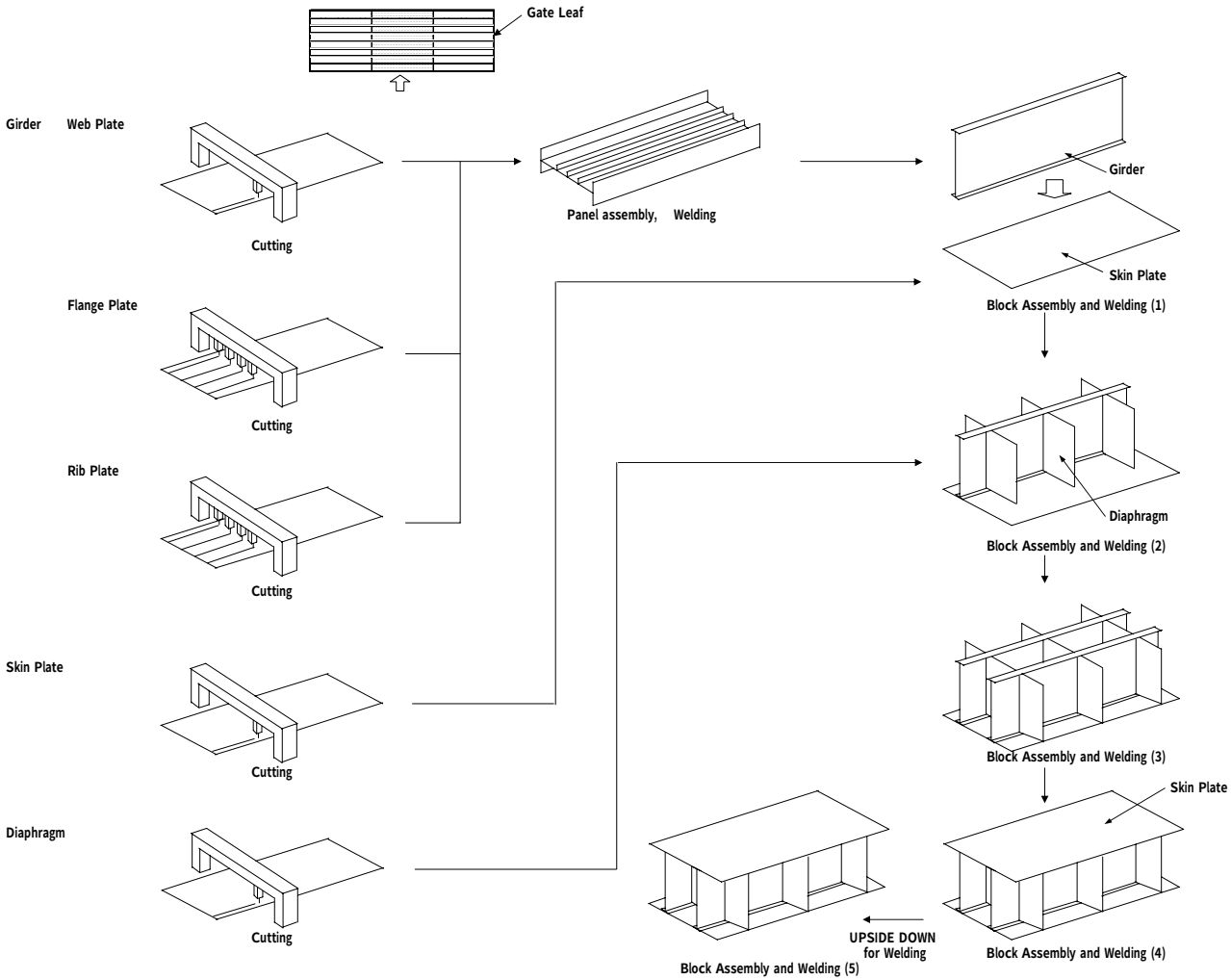

Fig.5.1.1-2 Miter Gate, One unit fabrication, Flow Chart No.1
(Miter Gate, Study Case(I))

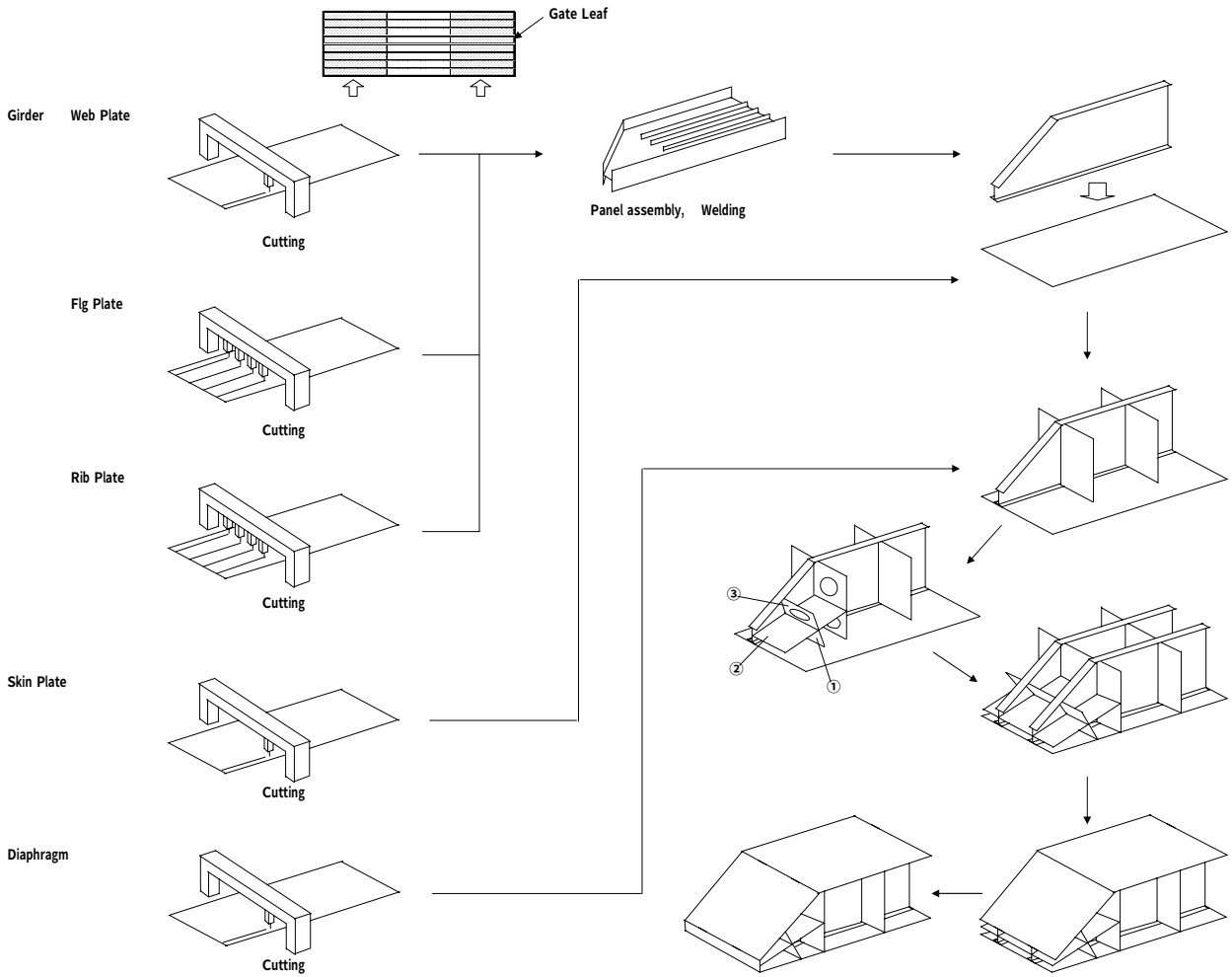

Fig.5.1.1-3 Miter Gate, One-unit fabrication, Flow Chart No.2
(Miter Gate, Study Case(I))

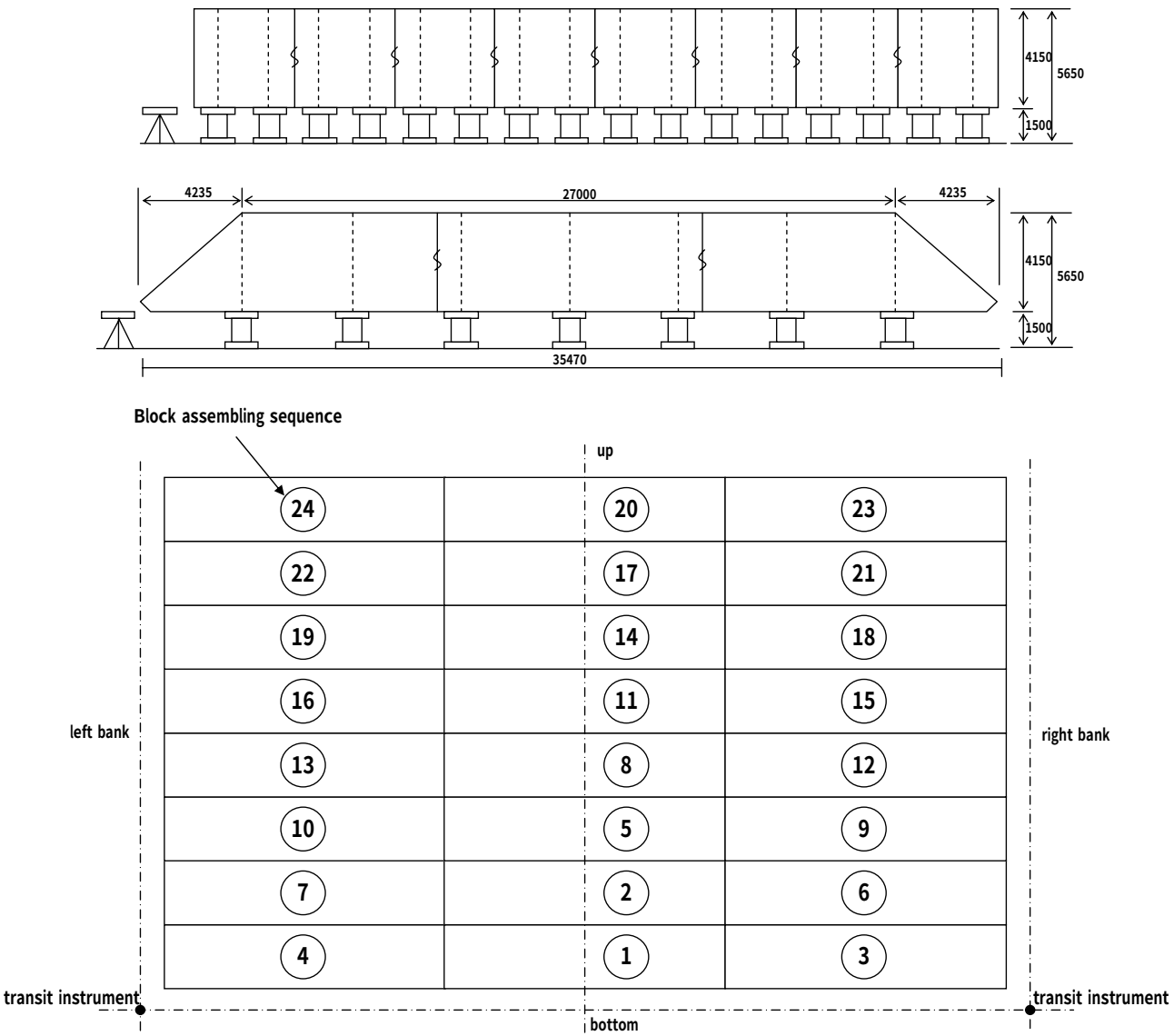

Fig.5.1.1-4 Miter Gate, One-unit fabrication, Flow Chart No.3

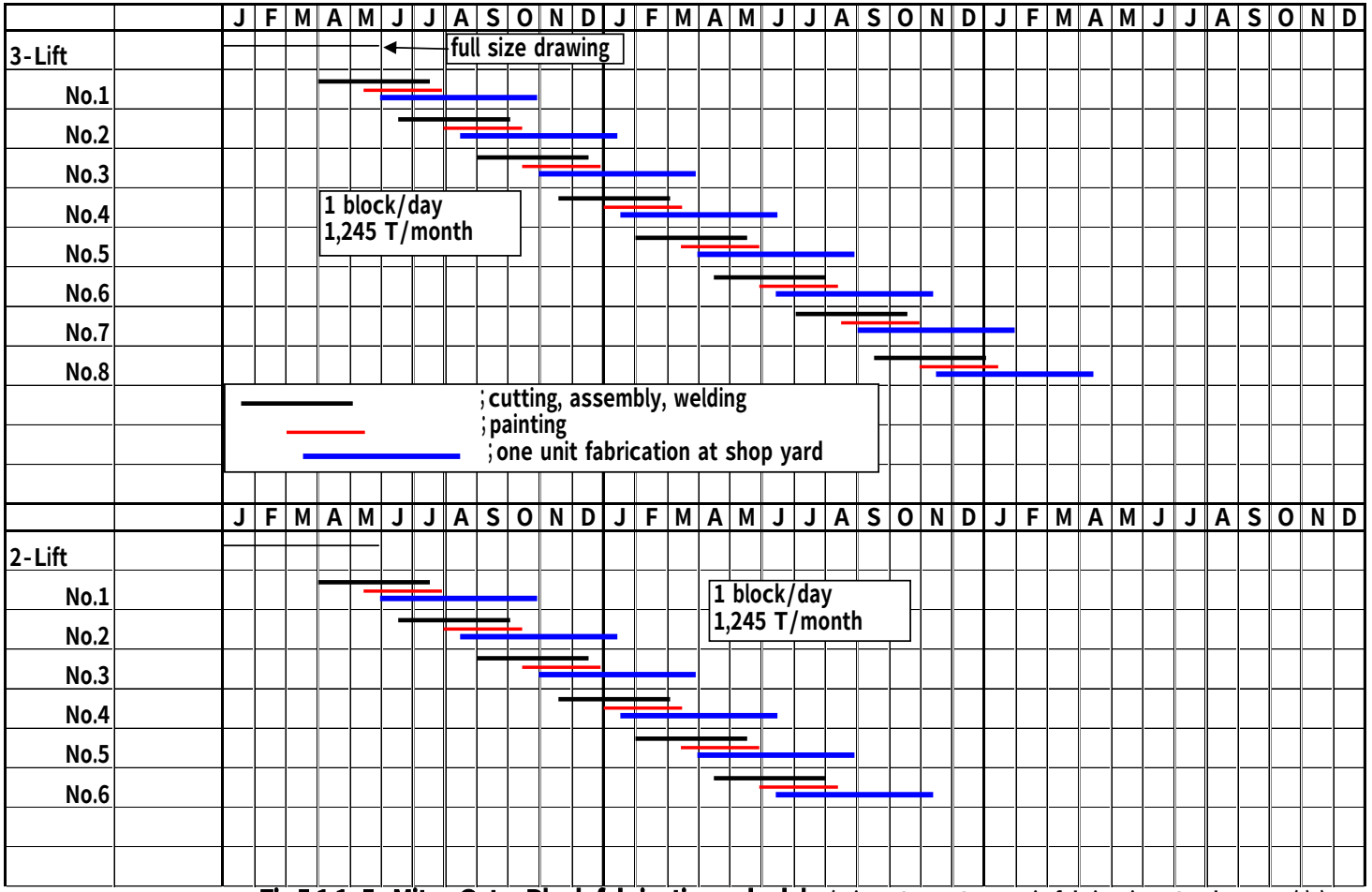

Fig.5.1.1-5 Miter Gate, Block fabrication schedule (Miter Gate, One-unit fabrication, Study case (I))

5.1.2 Block Fabrication and One-unit Fabrication at Dry Dock in Panama

A. Outline of Fabrication Procedure

In this fabrication method, block divisions must be decided to meet their transportation conditions to the dry dock in Panama.

When blocks are fabricated in an overseas country and then, their members are transported to the dry dock, the block divisions must conform to those shown in attached drawing (Fig.5.1.3-1) due to the transportation limits if the land transportation is necessary in Panama.

If blocks can be carried from the block fabrication shop to the installation site without any land transportation, it becomes advantageous from the viewpoints of the costs and processes in shop fabrication and installation at site to fabricate blocks as large as possible like in case of one-unit fabrication.

For fabricating large blocks, refer to Section 5.1.1 One-unit fabrication. We will study the fabrication method on the assumption that blocks are fabricated in size that can be transported on land. For details of block fabrication, refer to Section 5.1.3 Block fabrication at site.

B. Fabrication Flow Chart (Step Diagram)

For the fabrication flow chart, refer to Section 5.1.3 Block fabrication at site.

C. Fabrication Schedule

For the fabrication schedule, refer to Section 5.1.3 Block fabrication at site.

5.1.3 Block Fabrication at Site

A. Outline of Fabrication Procedure

In case of block fabrication, block divisions were decided from the land transportation conditions in Panama. (See Fig. 5.1.3-1)

If blocks can be carried from the block fabrication shop to the installation site without any land transportation, it becomes advantageous from the viewpoints of the costs and processes in shop fabrication and installation at site to fabricate blocks as large as possible like in case of one-unit fabrication.

For fabricating large blocks, refer to Section 5.1.1 One-unit fabrication.

We will study the fabrication method on the assumption that blocks are fabricated in size that can be transported on land.

B. Fabrication Flow Chart (Step Diagram)

For the fabrication flow chart in block fabrication, refer to Fig. 5.1.3-2 ~ Fig.5.1.3-4.

Fig.5.1.3-2 shows the fabrication flow chart of the center block of the gate leaf, while Fig.5.1.3-3 shows the fabrication flow chart of the right and left blocks. Also, Fig.5.1.3-4 shows the fabrication flow chart of the blocks for fabricating the adjustable quoins on the sides.

It is difficult for the blocks having an opening to control their welding distortion. However, since these blocks do not require any reversal for welding, the work steps can be reduced as a merit. Since the joints of blocks are welded at site, it is reliable for verifying the arrangement at site to attach the erection pieces by partial multiple trial assembly.

If the arrangement at site is guaranteed by measuring the block sizes only, the customer's approval must be obtained.

C. Fabrication Schedule

For the fabrication schedule in block fabrication, refer to Fig. 5.1.3-5.

参考図

当社の承認なしに設計の引用及び写図、複写を行ってはならない。

For Reference

This Drawing shall not be submitted to outside parties without the prior consent in writing by MHI.

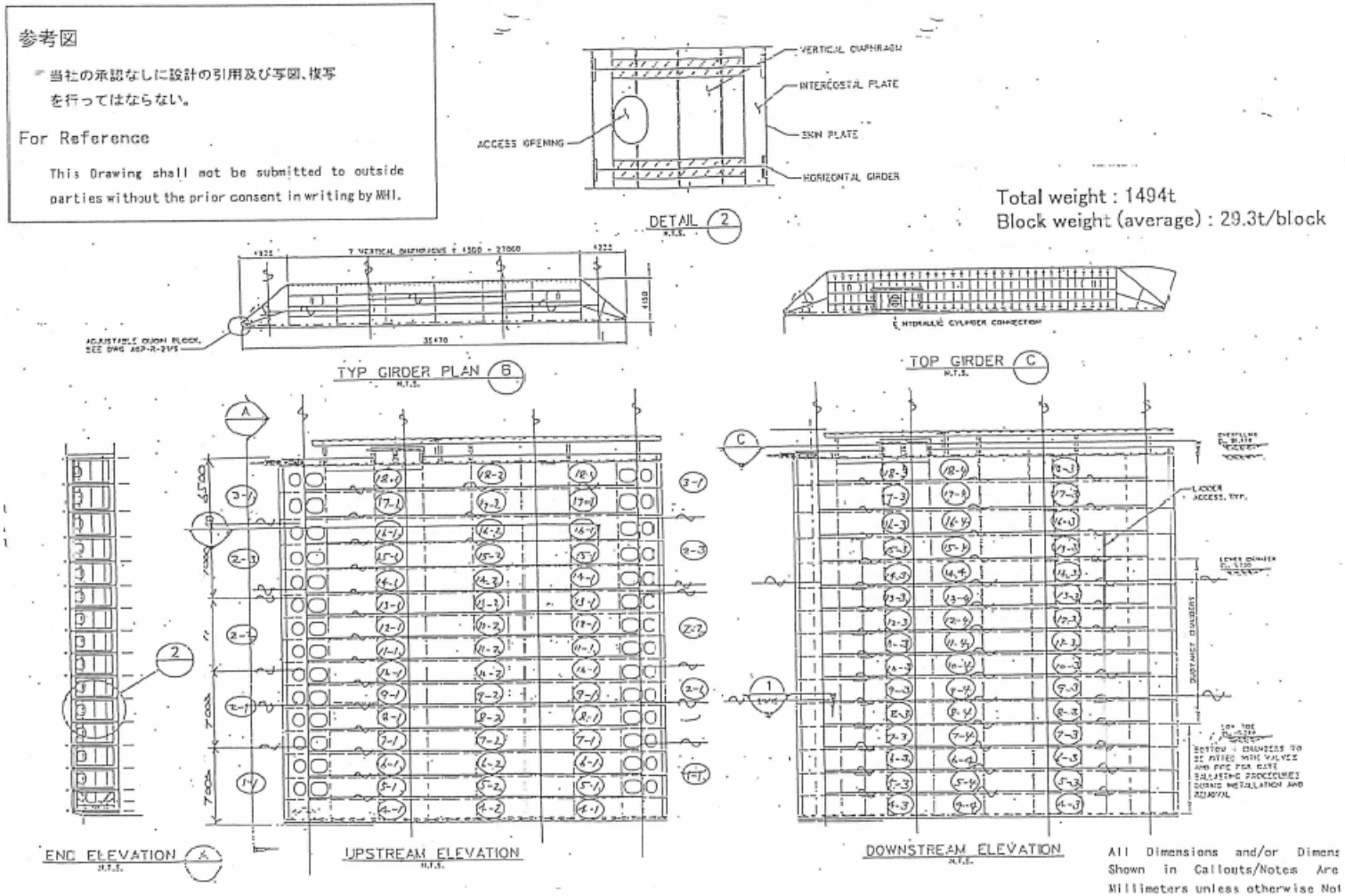

Fig.5.1.3-1 Block division plan for Miter gate, Block fabrication
(Miter Gate, Study Case (II)&(III))

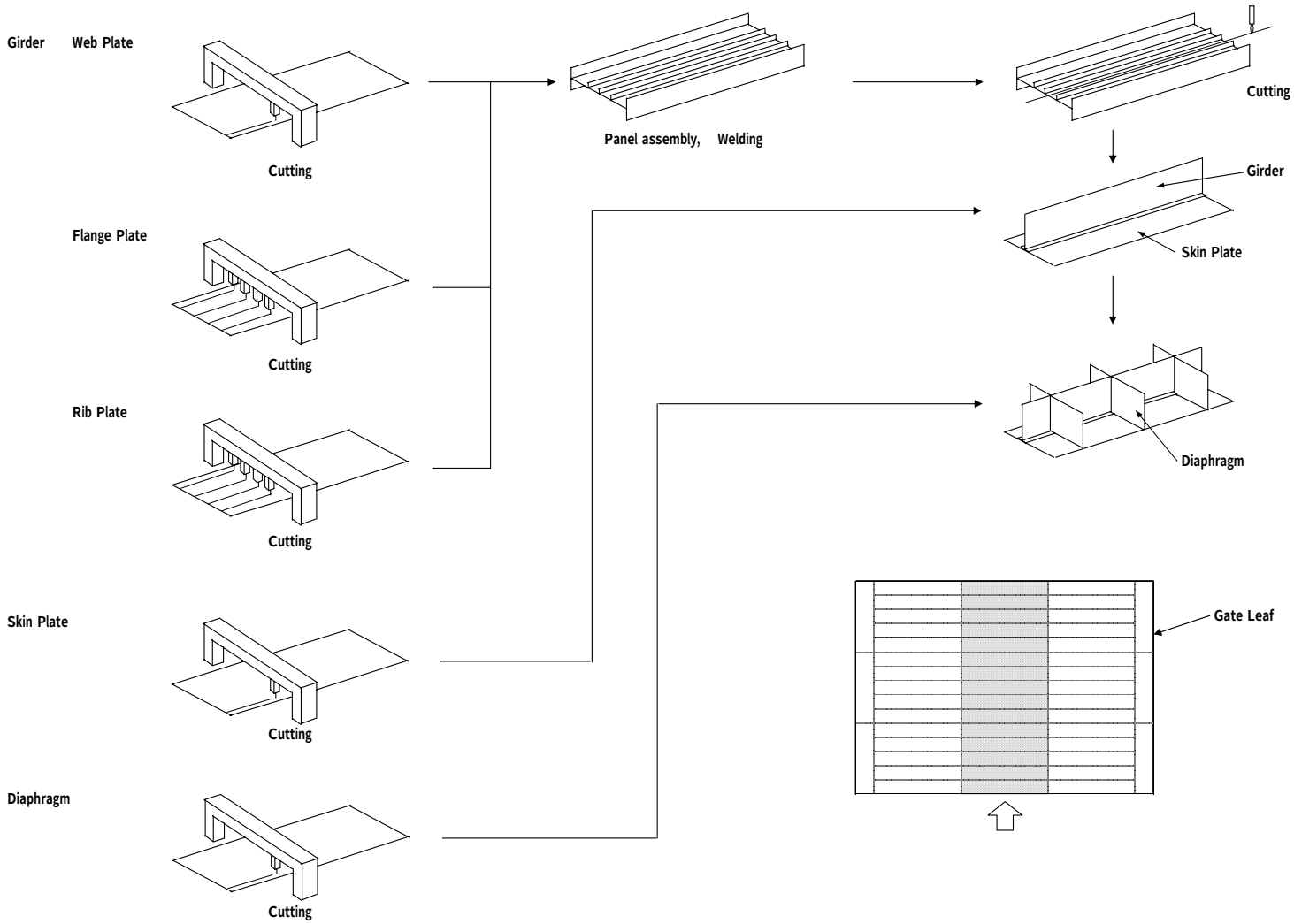

Fig.5.1.3-2 Miter Gate, Block fabrication, Flow Chart No.1
(Miter Gate Study, Case(II)&(III))

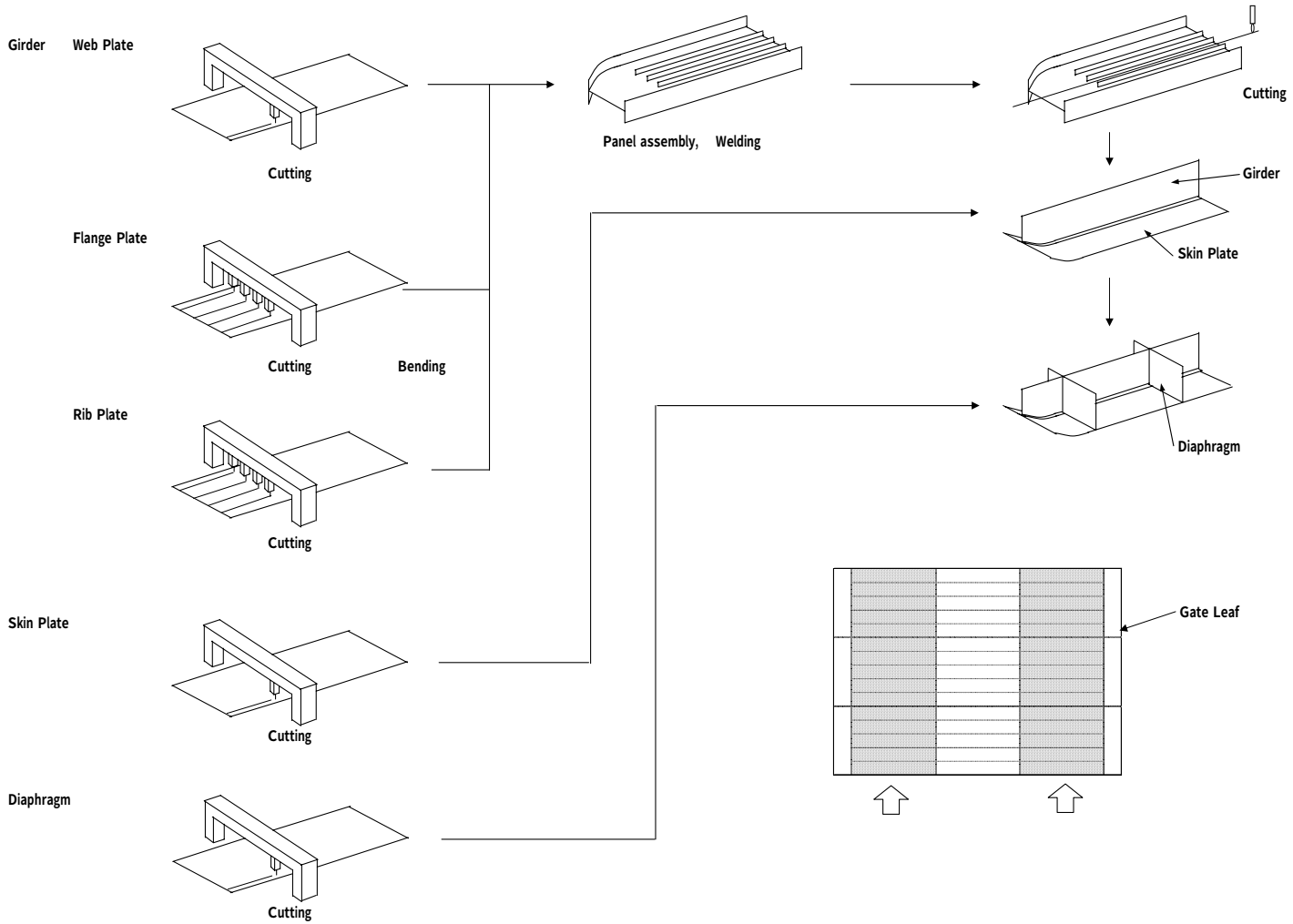

Fig.5.1.3-3 Miter Gate, Block fabrication, Flow Chart No.2
(Miter Gate, Study Case(II)&(III))

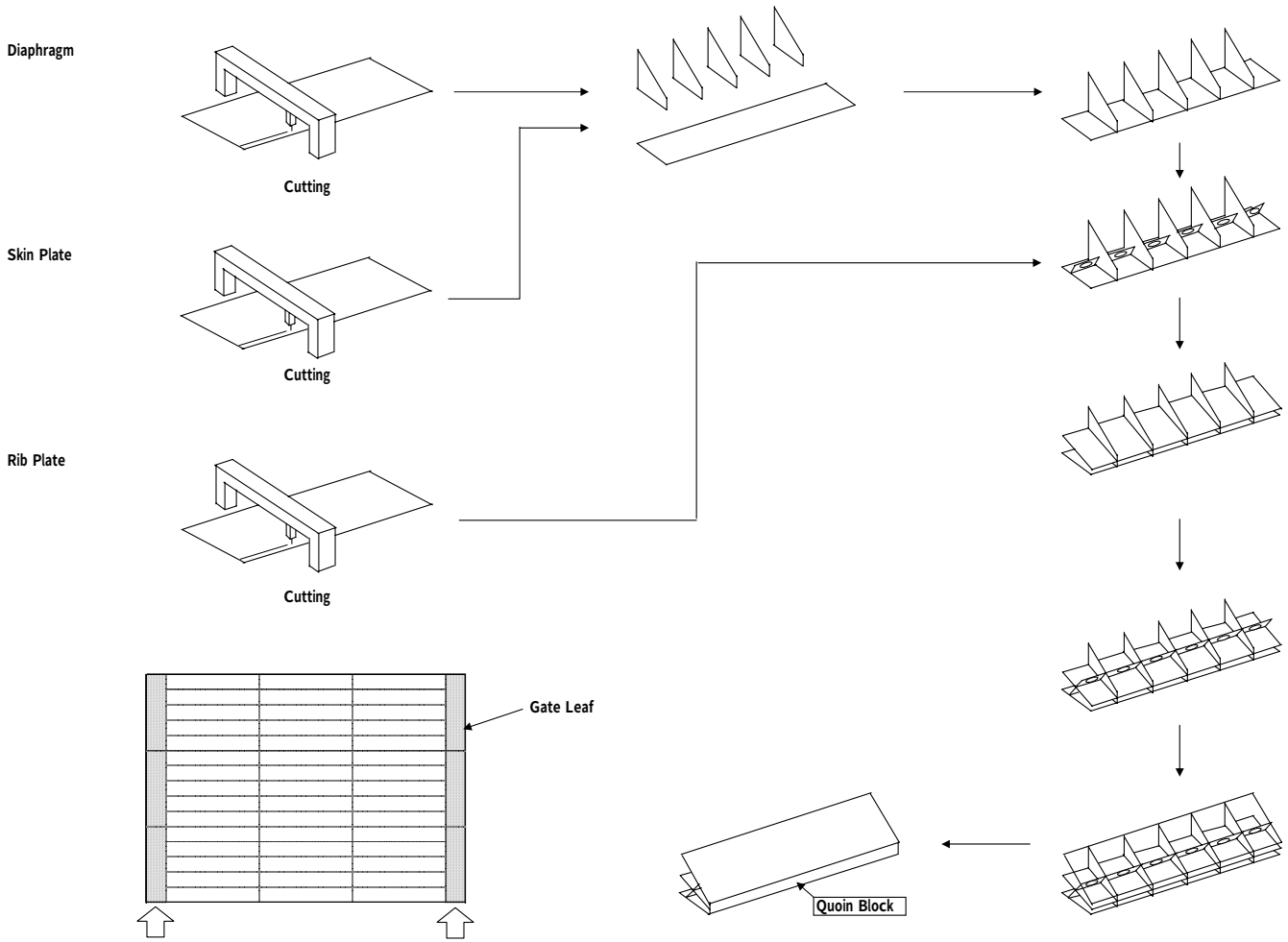

Fig.5.1.3-4 Miter Gate, Block fabrication, Flow Chart No.3
(Miter Gate, Study Case(II)&(III))

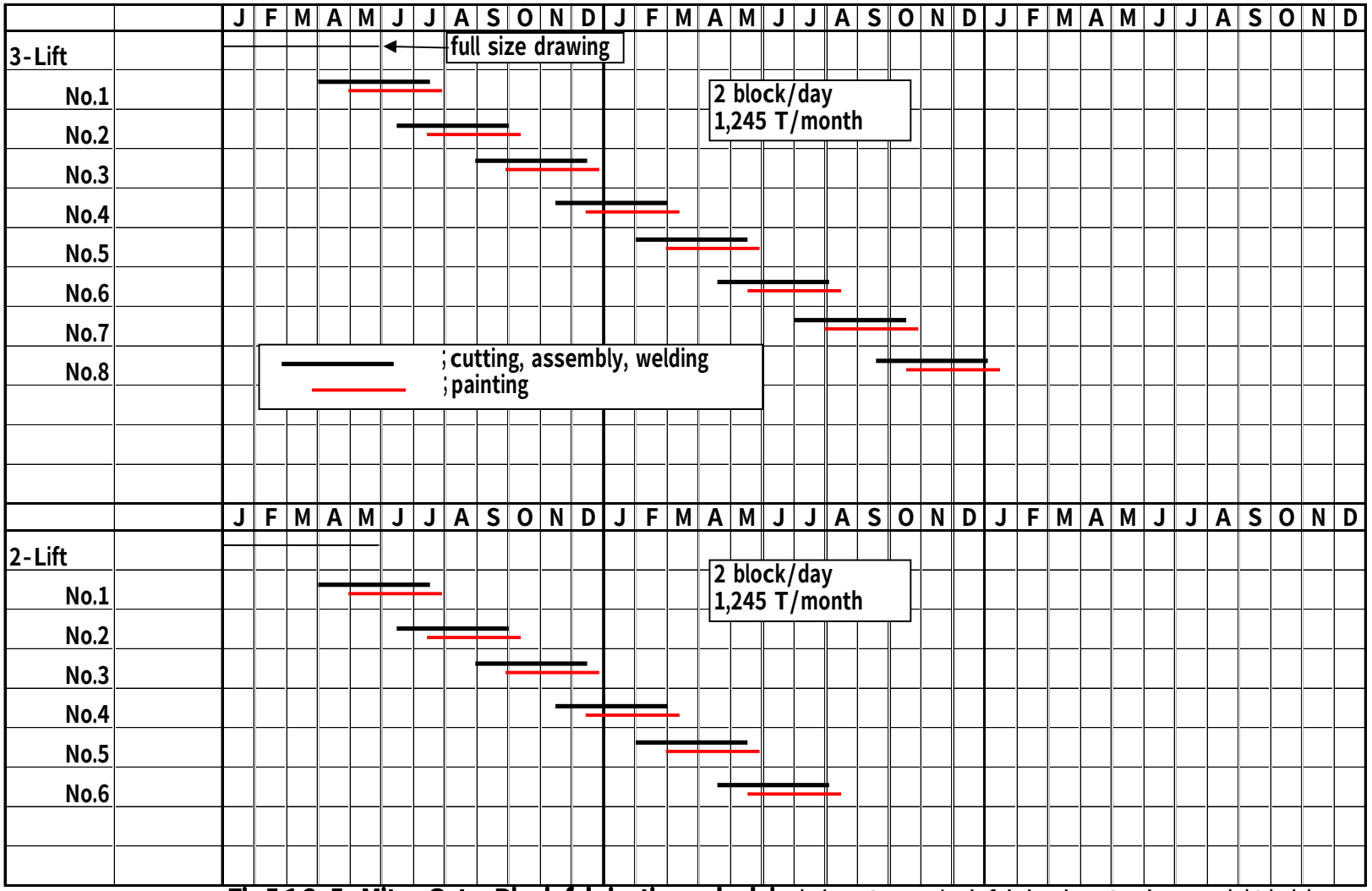

Fig.5.1.3-5 Miter Gate, Block fabrication schedule (Miter Gate, Block fabrication, Study case (II)&(III))

5.2 Rolling Gate

5.2.1 One-unit Fabrication

A. Outline of Fabrication Procedures

For fabricating the Rolling Gate as one-unit, the following items must be fully studied before starting fabrication.

(a) Study of Block divisions Conforming to the Fabrication Shop

How to increase the work in a shop having good handling and welding conditions results in the reduction of the entire processes including the yard assembly.

Block divisions each containing more section members will facilitate the profile control when assembling blocks and will improve the fabrication efficiency. Since the Rolling Gate is assembled in vertical condition at yard, the mounting by the block method is the most efficient. Block divisions must be planned by taking the capacity of available cranes at the yard assembly site into consideration. A block division plan is shown in Fig. 5.2.1-1.

(b) Selection of Yard for Yard Assembly

Since one-unit fabrication requires outdoor assembly work, the following items must be studied.

① Study of the block transportation to the yard for yard assembly and handling machine in the yard.
② Study of welding machine and power supply in the yard
③ Study of the bearing capacity in the yard for yard assembly
④ Moving and transporting methods of large blocks from the yard

B. Fabrication Flow Chart (Step Diagram)

Fig.5.2.1-2 ~ 5.2.1-5 show the fabrication flow chart of one-unit fabrication.

For the rolling gate, panels and internal truss members are fabricated separately. Fig.5.2.1-2 shows the flow chart for fabricating the panel having a reinforcing material and the truss member inside the gate.

Fig.5.2.1-3 and Fig.5.2.1-4 show the procedure for assembling the truss members and erecting them vertically to the block having two panels by using a crane. Fig.5.2.1-5 shows the step of mounting the opposite panels after raising the block vertically. The bottom stage blocks are fabricated by repeating the above procedure.

Fig.5.2.1-6 and Fig.5.2.1-7 show the step diagram of yard assembly. The time of block assembling can be reduced most by starting from the center blocks and

spreading laterally to both sides.

The blocks at the float part become heavy. For reducing the installation work and yard assembly welding quantity at this part, the block size could be reduced or as shown in the flow chart panels could be installed. When panels are installed, it is efficient to mount 2 or 3 panels at the same time which are fixed with comparatively light members like diaphragms by provisional members.

For shortening the schedule the scaffolding for yard assembly welding is recommended to be attached to the panels before mounting the blocks.

C. Fabrication Schedule

Fig.5.2.1-8 shows the fabrication schedule of one-unit fabrication.

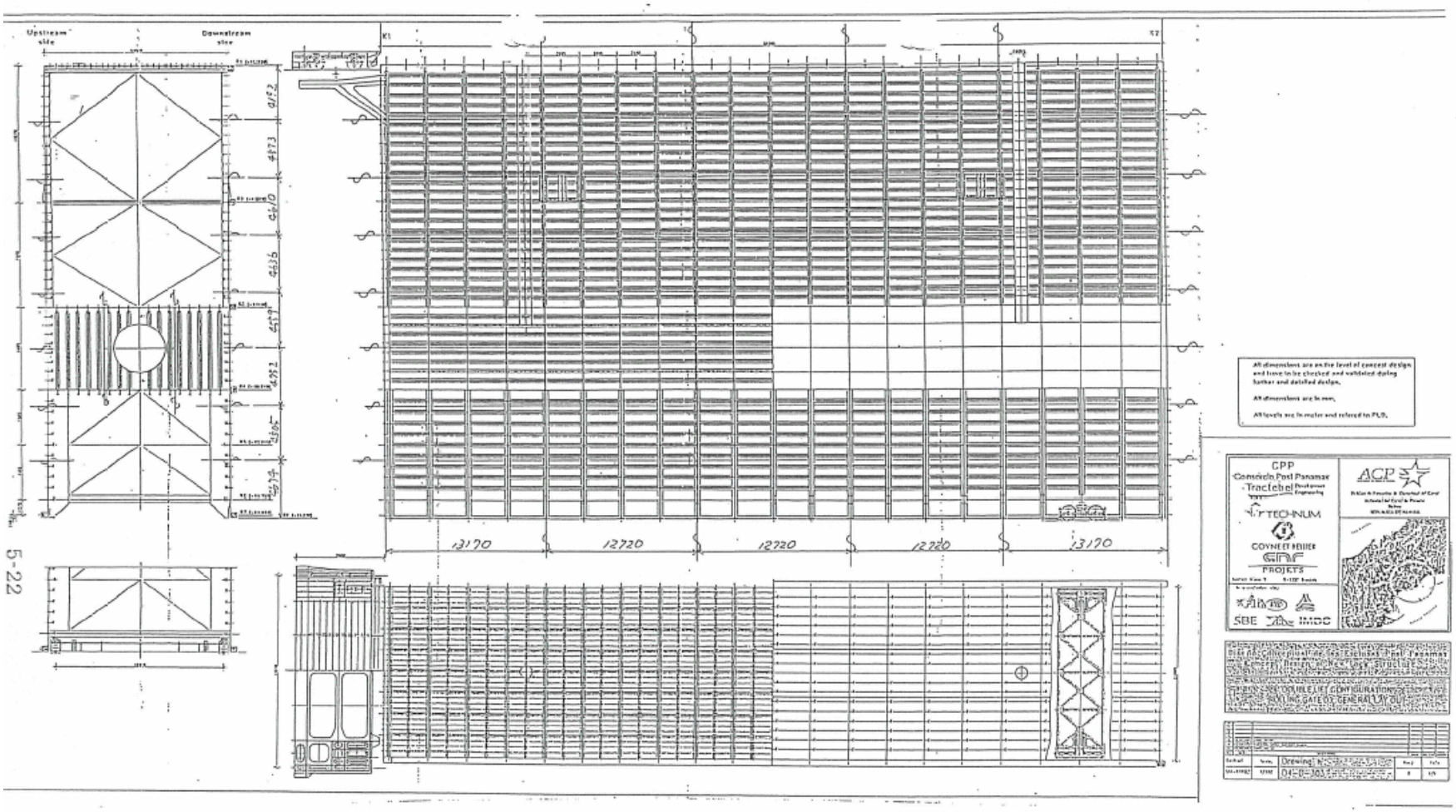

Fig.5.2.1-1 Block division plan for Rolling gate, One-unit fabrication
(Rolling Gate, Study Case (I))

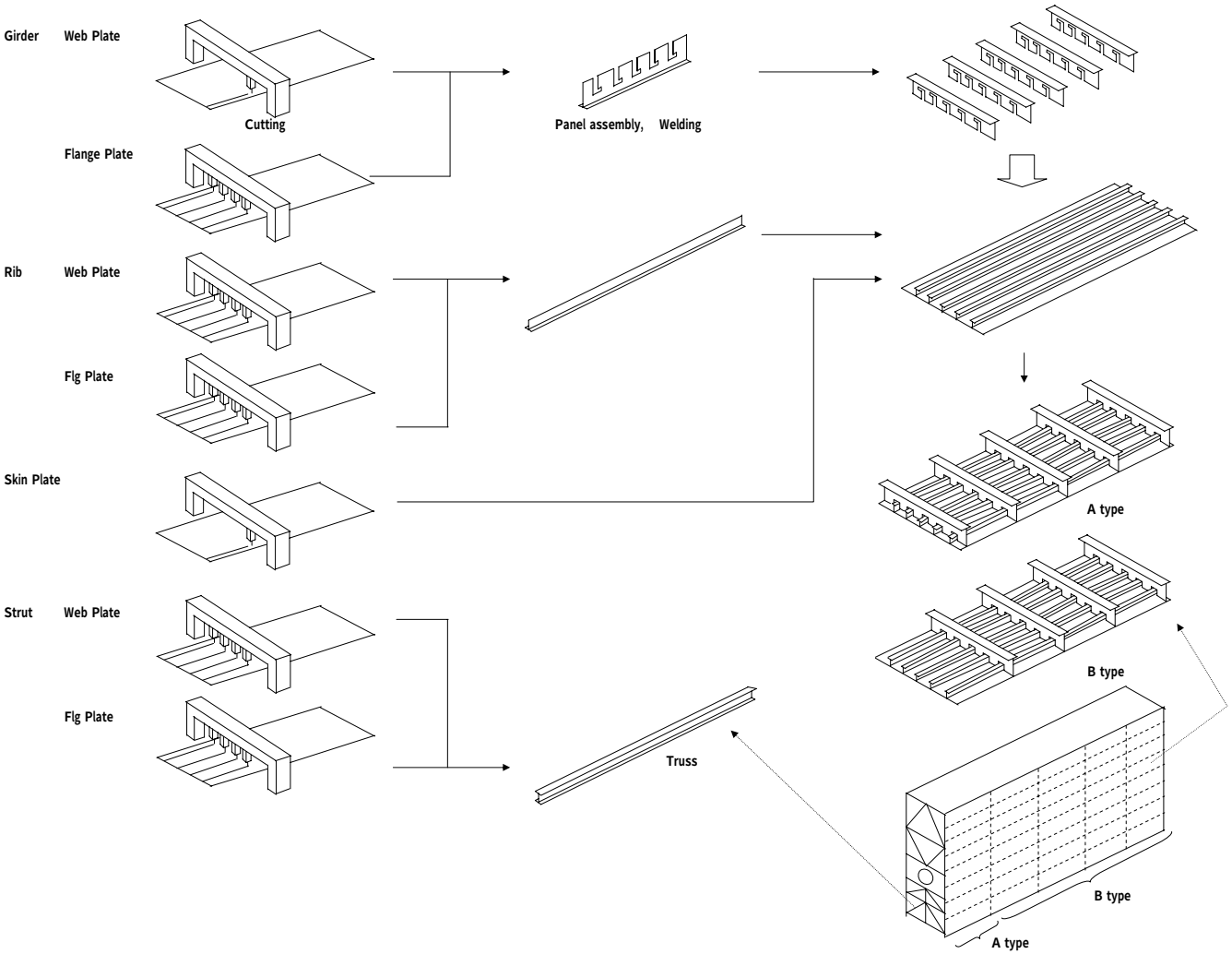

Fig.5.2.1-2 Rolling Gate, One-unit fabrication, Flow Chart No.1
(Rolling Gate, Study Case(I))

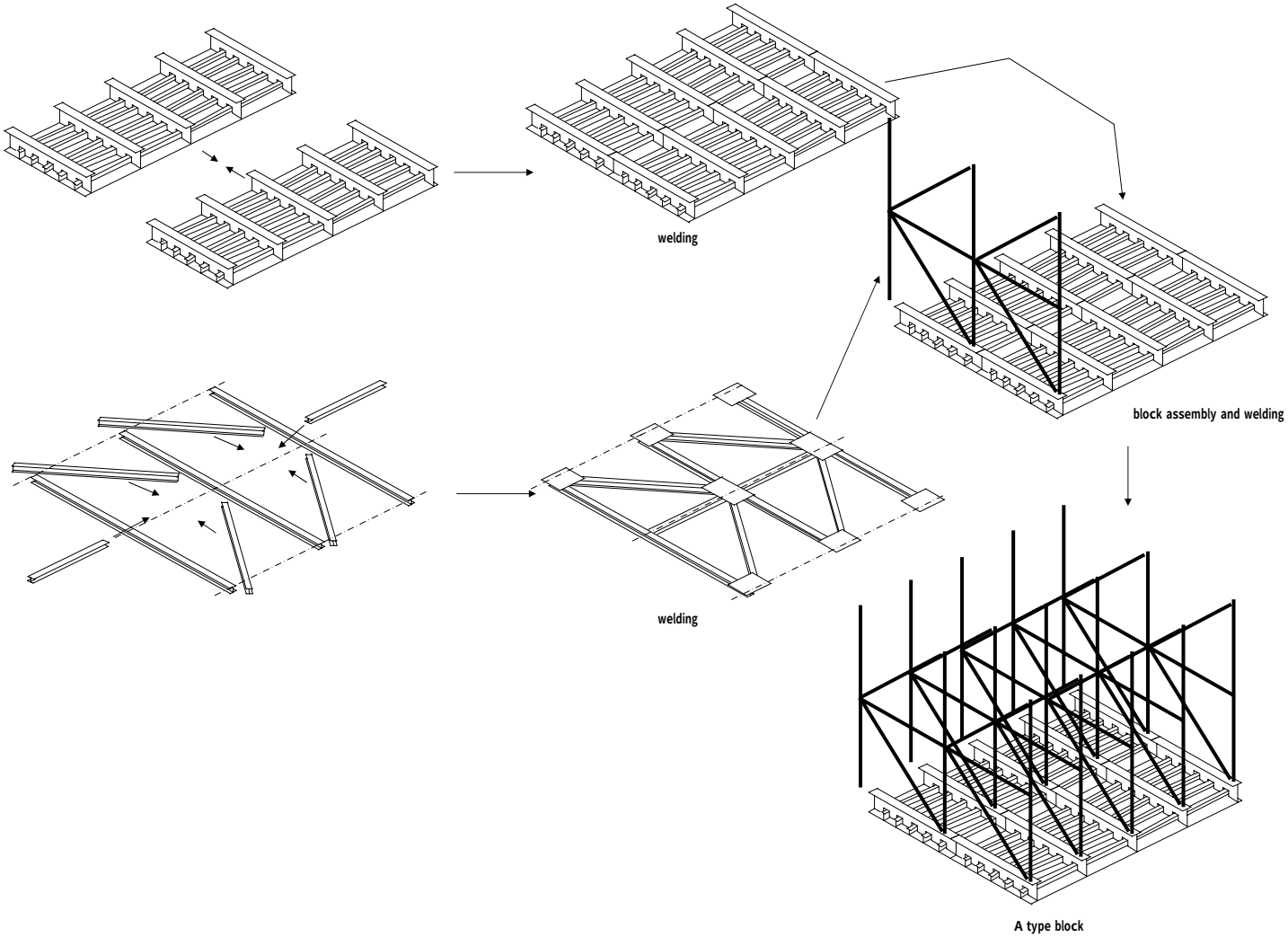

Fig.5.2.1-3 Rolling Gate, One-unit fabrication, Flow Chart No.2
(Rolling Gate, Study Case(I))

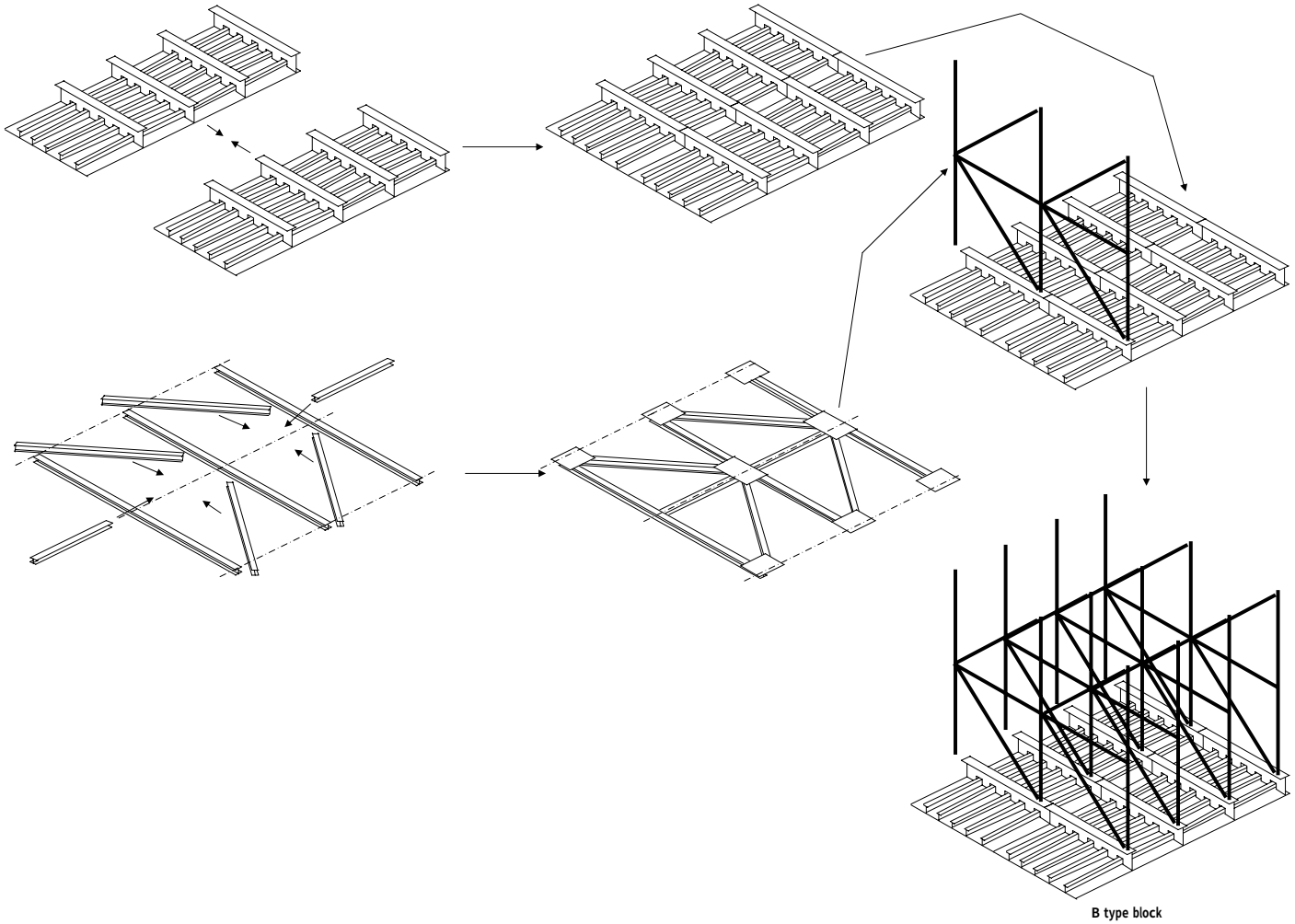

Fig.5.2.1-4 Rolling Gate, One-unit fabrication, Flow Chart No.3
(Rolling Gate, Study Case(I))

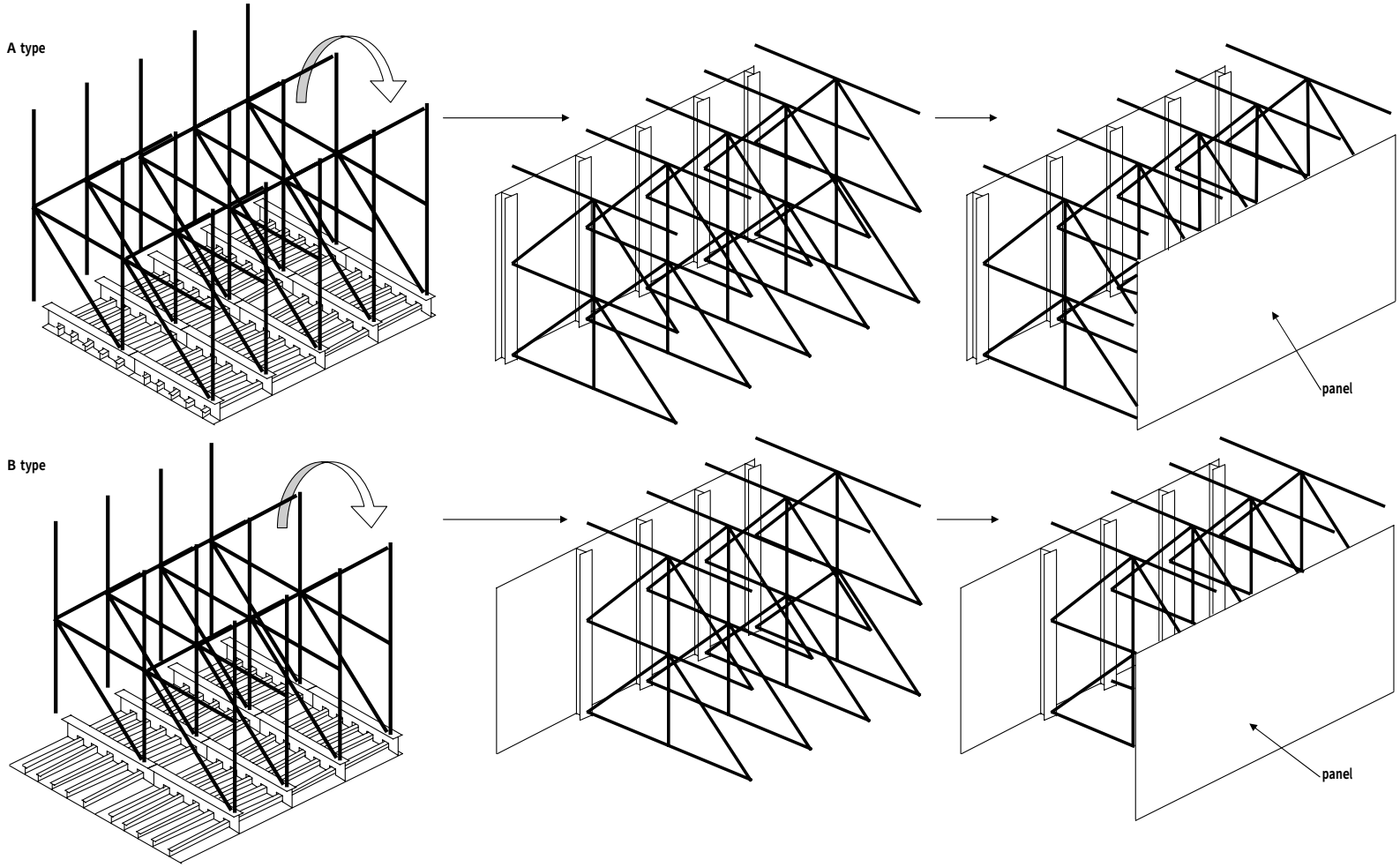

Fig.5.2.1-5 Rolling Gate, One-unit fabrication, Flow Chart No.4
(Rolling Gate, Study Case(I))

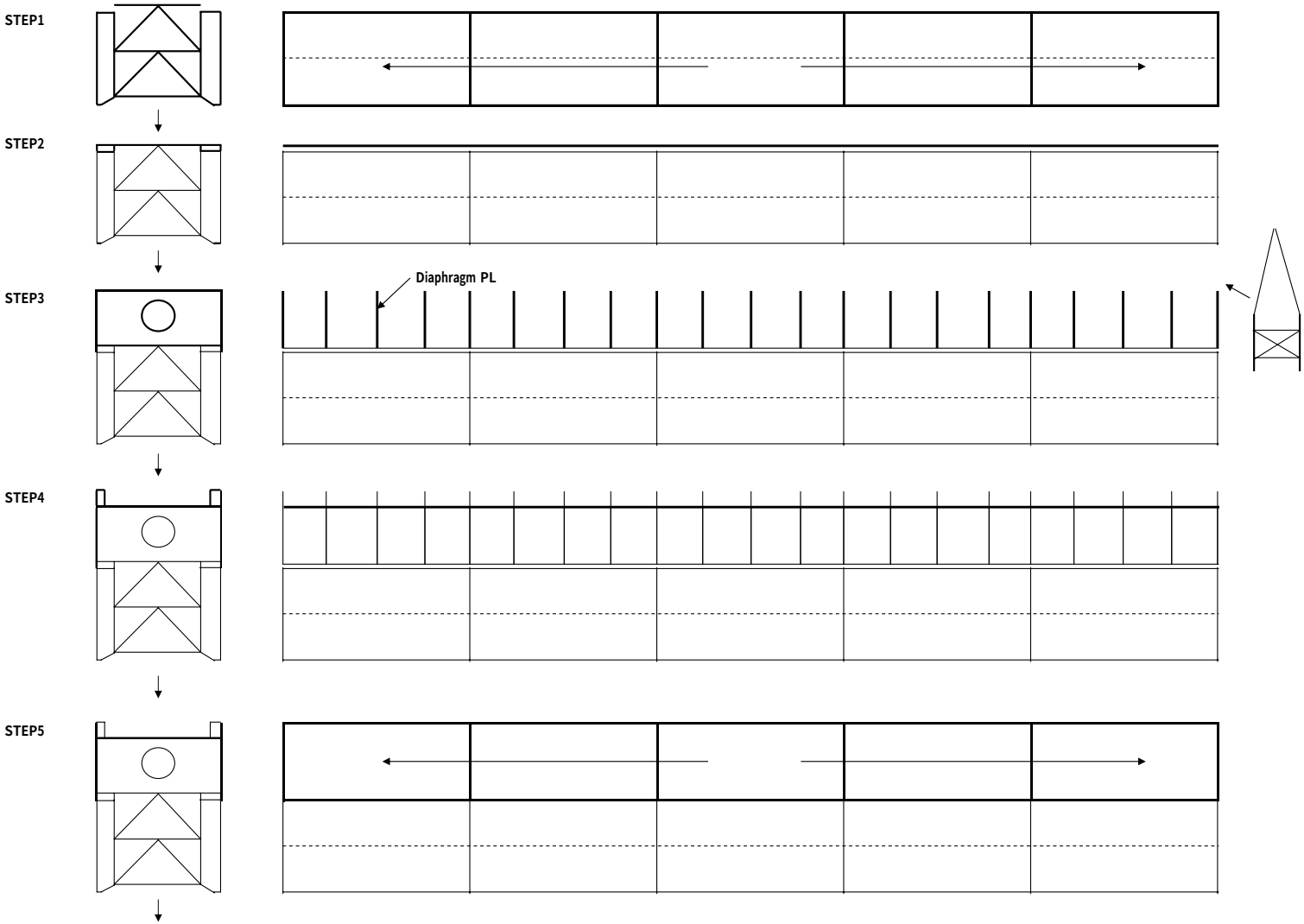

Fig.5.2.1-6 Rolling Gate, One-unit fabrication, Flow Chart No.5

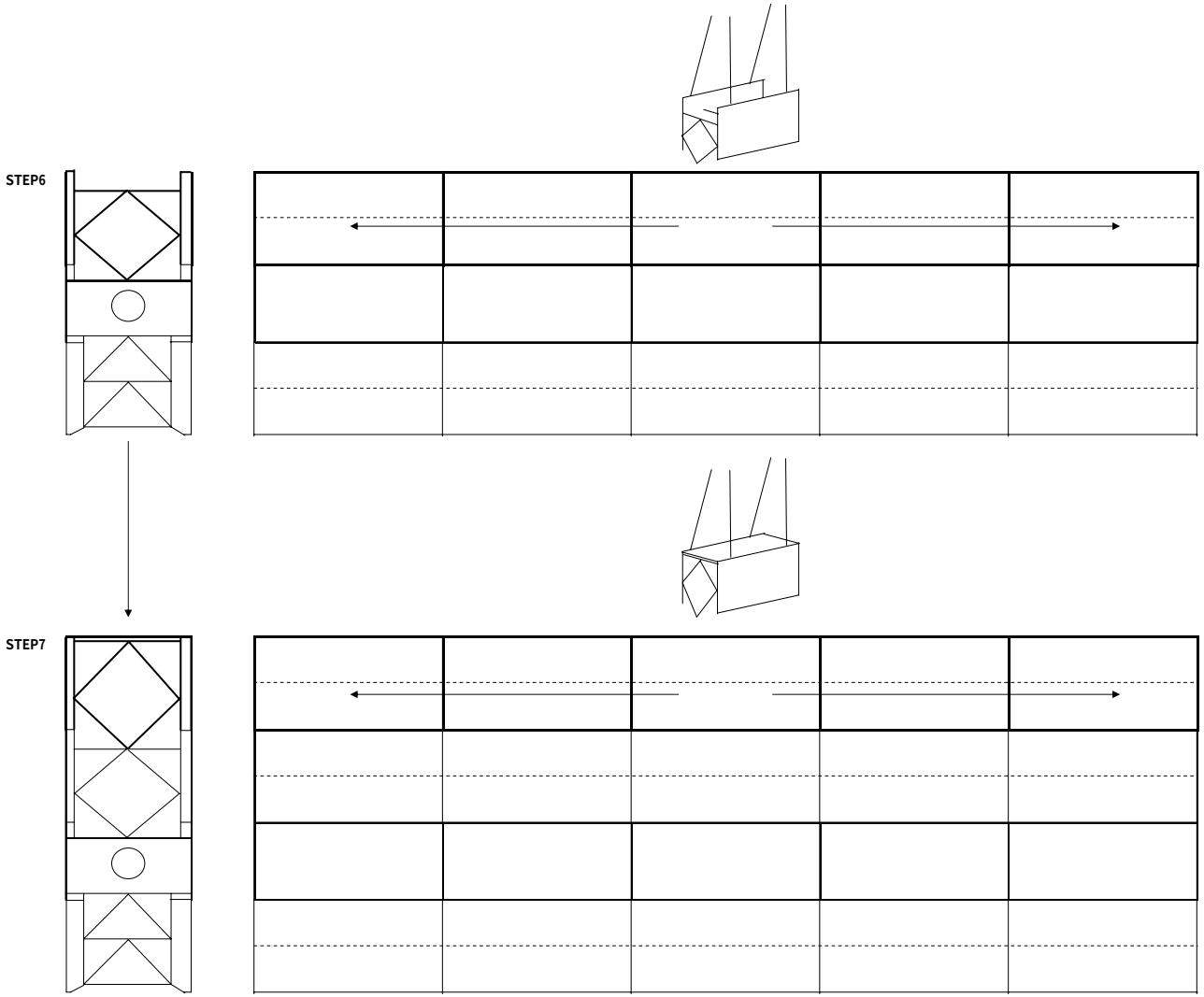

Fig.5.2.1-7 Rolling Gate, One-unit fabrication, Flow Chart No.6
(Rolling Gate, Study Case(I))

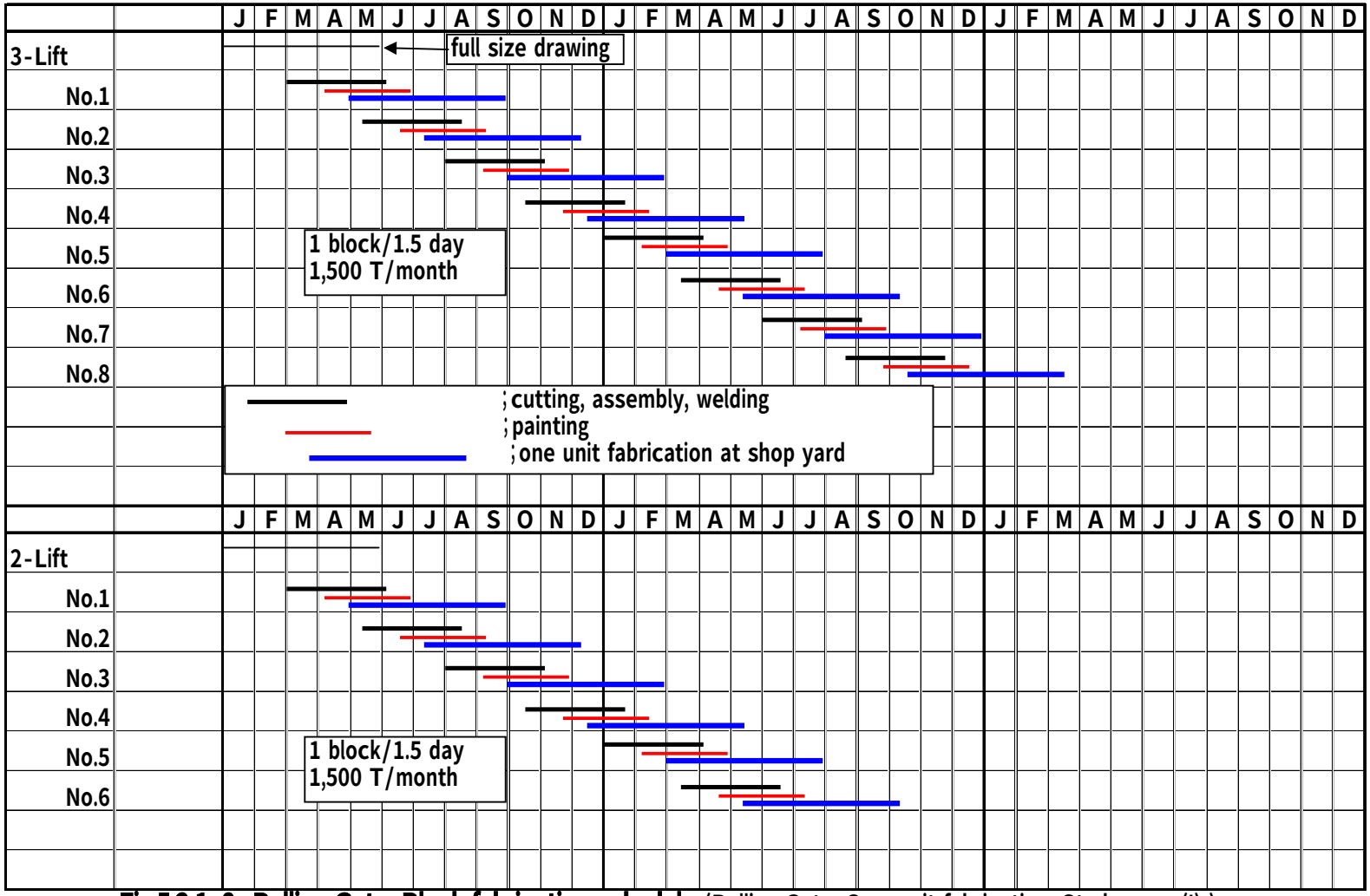

Fig.5.2.1-8 Rolling Gate, Block fabrication schedule (Rolling Gate, One-unit fabrication, Study case (I))

5.2.2 Block Fabrication and One-unit Fabrication at Dry Dock in Panama

A. Outline of Fabrication Procedure

In this fabrication method, block divisions must be decided to meet their transportation conditions to the dry dock in Panama.

When blocks are fabricated in an overseas country and then, their members are transported to the dry dock, the block divisions must conform to those shown in attached drawing (Fig.5.2.3-1) due to the transportation limits if the land transportation in Panama is necessary. If the land transportation in Panama is not necessary for transporting members to the dry dock but members can be transported to the dry dock by means of ocean transportation only, on the contrary, it becomes advantageous from the viewpoints of the costs and processes in plant fabrication and installation at site to fabricate blocks as large as possible like in case of one-unit fabrication in Section 5.2.1.

For fabricating large blocks, refer to Section 5.2.1 One-unit fabrication.

We will study the fabrication method on the assumption that blocks are fabricated in size that can be transported on land. For details of block fabrication, refer to 5.2.3 Block fabrication at site.

B. Fabrication Flow Chart (Step Diagram)

For the fabrication flow chart, refer to Section 5.2.3 Block fabrication at site.

C. Fabrication Schedule

For the fabrication schedule, refer to Section 5.2.3 Block fabrication at site.

5.2.3 Block Fabrication at Site

A. Outline of Fabrication Procedure

In case of block fabrication, the block divisions were decided from the overland transportation conditions in Panama. (See Fig. 5.2.3-1)

If blocks can be carried from the block fabrication plant to the installation site without any overland transportation, it becomes advantageous from the viewpoints of the costs and processes in plant fabrication and installation at site to fabricate blocks as large as possible like in case of one-unit fabrication.

For fabricating large blocks, refer to Section 5.2.1 One-unit fabrication.

We will study the fabrication method on the assumption that blocks are fabricated in size that can be transported on land.

B. Fabrication Flow Chart (Step Diagram)

For the fabrication flow chart in block fabrication, refer to Fig. 5.2.3-2.
It is desirable to transport the truss members to the site without assembling them when taking the transportation quantity into account.
A fabrication procedure of typical panels and truss members is shown in the flow chart. A simplified arrangement connection structure of panels and truss members will be the most contributory to efficient fabrication and installation of the rolling gate.

C. Fabrication Schedule

For the fabrication schedule in block fabrication, refer to Fig. 5.2.3-3.

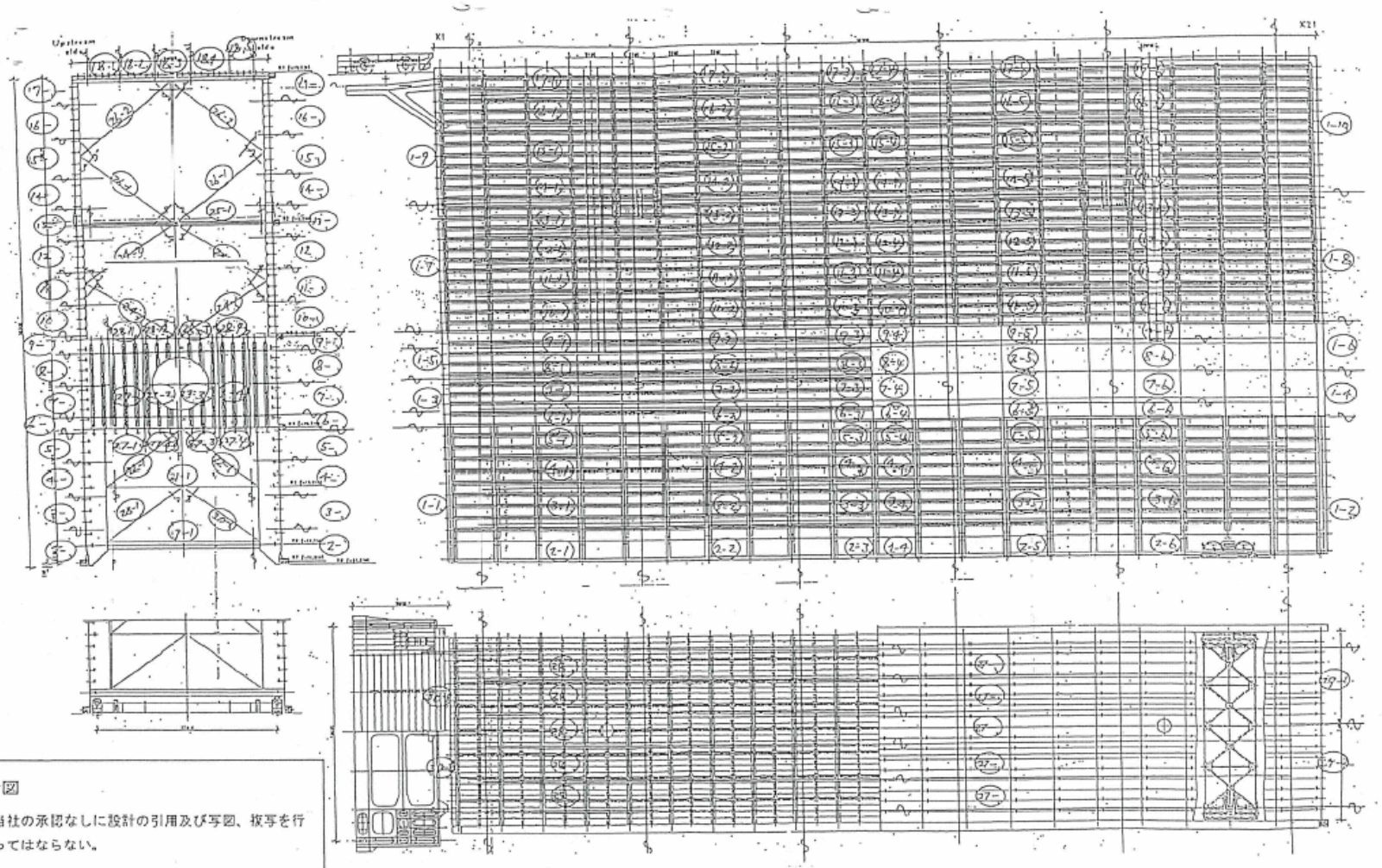

参考図

当社の承認なしに設計の引用及び写図、複写を行ってはならない。

For Reference

This Drawing shall not be submitted to outside parties without the prior consent in writing by MHI.

Fig.5.2.3-1 Block division plan for Rolling gate, Block fabrication
(Rolling Gate, Study Case (II)&(III))

All Dimensions and/or Dimensions Shown in Callouts/Notes Are in Millimeters unless otherwise Noted.

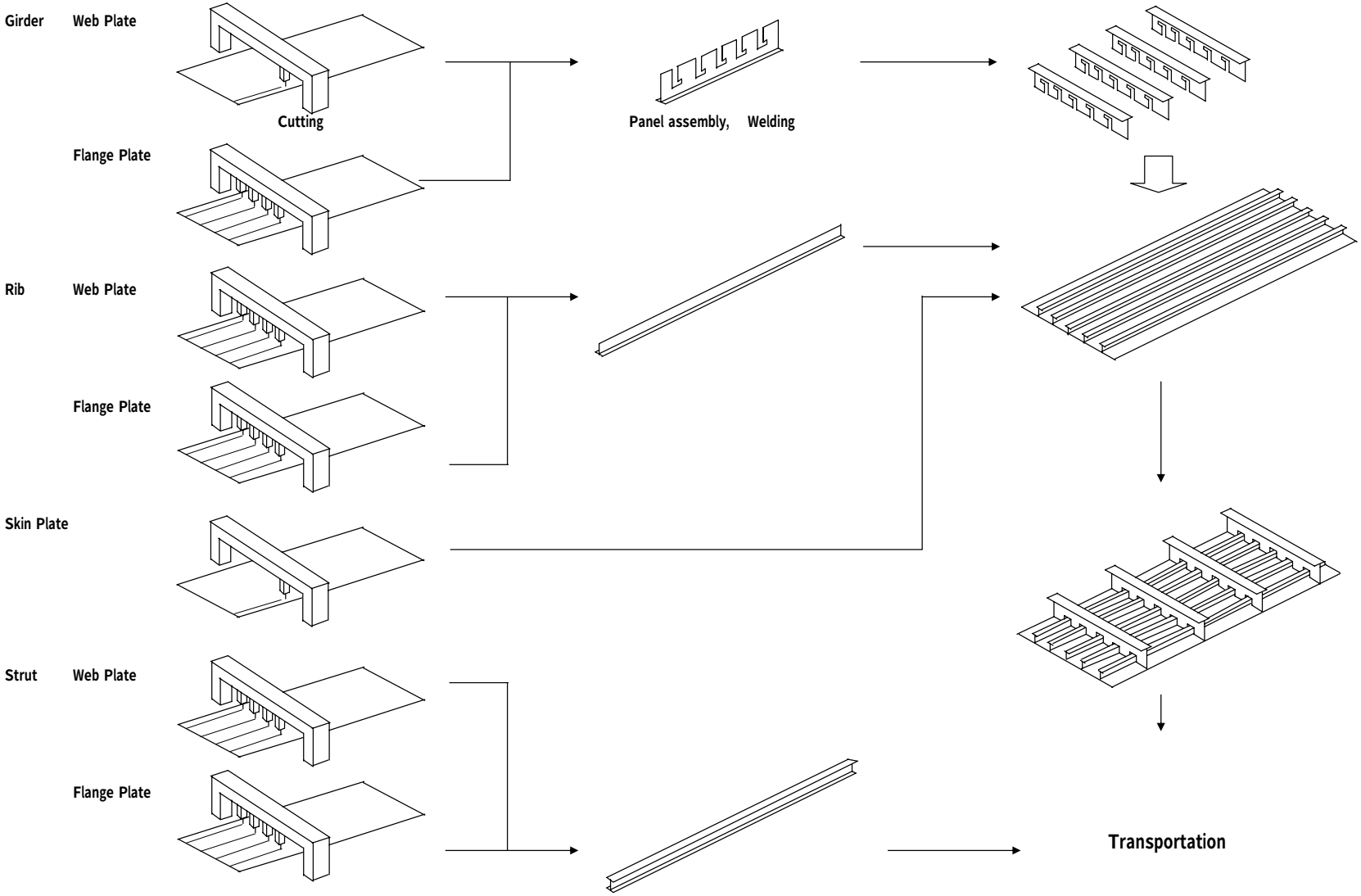

Fig.5.2.3-2 Rolling Gate, Block fabrication, Flow Chart No.1
(Rolling Gate, Study Case(II)&(III))

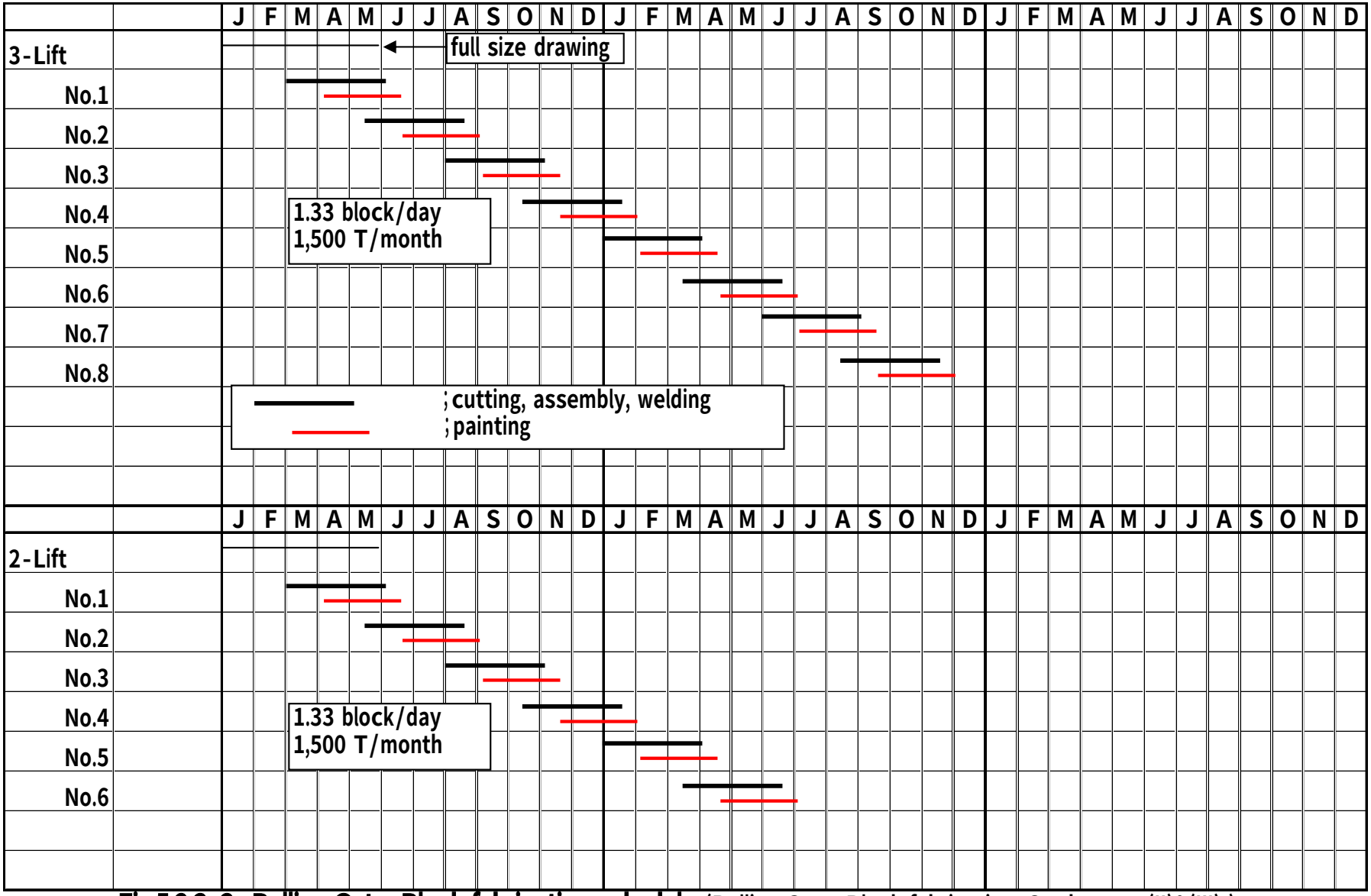

Fig.5.2.3-3 Rolling Gate, Block fabrication schedule (Rolling Gate, Block fabrication, Study case (II)&(III))

5.3 Evaluation of Fabrication Methods (Applicable for both 2-Lift and 3-Lift)

	Features of Methods	Establishment Conditions of Methods	Suggestions Caused by the Restrictions of Fabrication Methods	Evaluation
Miter Gate Study Case (I) One-unit Fabrication	• Block divisions can be changed according to the plant capabilities. • A yard for one-unit fabrication must be secured. • Yard assembly is done by horizontally assembling of gate leaf. Joints are planned to be welded over the entire section, so that the welders' skill and quality control are necessary. • Transportation method of large blocks must be studied. • Since the yard assembly is done outdoors, it is affected by weather.	• Fabrication schedule with block divisions conforming to the plant capabilities shall satisfy the delivery requirements. • A yard shall be prepared for yard assembly (including the preparation of heavy machines, welding machines, grinders, and drive power for yard assembly). • Fabrication, quality control, and process control capabilities of large blocks shall be secured. • A capacity of studying the transportation method of large blocks shall be secured.	• Security of large block assembly yard, confirmation of bearing capacity, and establishment of the loading method from the yard are necessary. Large block weight: 1,494 ton Large block bearing area: 1,224m²(1.2 ton/m²) • Reinforcing material for skin plate shall be designed by using shape steel for reducing the fabrication costs and fabrication schedule. (Applicable to all cases in common) • A structure to be able to hoist a large block on land shall be studied and designed.	A
Miter Gate Study Case (II) Study Case (III) Block Fabrication	• Block divisions are restricted according to the transportation conditions in Panama. • Since blocks are not profiled as a box, no reversal work is necessary in the course of fabrication. Also, yard assembly is not necessary. As a result, the schedule of this method is shorter than that of one-unit fabrication method. If blocks are stacked during transportation, profile maintenance and reinforcement must be studied. • A method of confirming that the blocks are assembled correctly at installation site must be studied. It is not recommended to adopt the provisional assembly of the entire structure from the viewpoints of the construction period and costs.	• Schedule conforming to the delivery requirements at site shall be observed. • Transportation plan up to the site and its work shall be executable.	• In the block divisions under the transportation conditions in Panama, one girder is assembled in one block. If two girders are assembled in one block by changing the girder interval, the distortion will be reducible in the course of fabrication. However, this causes an increase of joints at site as a demerit.	A
Rolling Gate Study Case (I) One-unit Fabrication	• Block divisions can be changed according to the plant capabilities. • A yard for one unit fabrication must be secured. • Yard assembly is done under the vertical condition. The schedule can be shortened by mounting the panels and truss materials after assembling them in the form of blocks as much as possible in advance. Technical capability and quality control capability are necessary for controlling the block profiles. Scaffolding plan and safety control become the contractors' requirements because of height work. • Loading method of large blocks shall be studied. • Since the yard assembly is done outdoors, it is affected by weather.	• Fabrication schedule with block divisions conforming to the plant capabilities shall satisfy the delivery requirements. • A yard shall be prepared for yard assembly. A crane shall be prepared for assembling a block of 36.5m in height, 71m in length, and 14m in width (including the preparation of heavy machines, welding machines, grinders, and drive power for yard assembly). • Large block fabrication, quality control, and process control capabilities shall be secured. • A capacity of studying the transportation method of large blocks shall be secured.	• Security of large block assembly yard, confirmation of bearing capacity, and establishment of the loading method from the yard are necessary. block no. weight bearing area unit weight R-D3d 4,730 ton 903 m² 5.2 ton/m² R-T1 2,088 ton 419 m² 5.0 ton/m² R-T4d 4,007 ton 710 m² 5.7 ton/m² • Reinforcing material for Skin PL shall be designed by using shape steel for reducing the fabrication costs and fabrication schedule. (Applicable to all cases in common) • A structure to be able to hoist a large block on land shall be studied and designed.	B
Rolling Gate Study Case (II) Study Case (III) Block Fabrication	• Block divisions are restricted according to the transportation conditions in Panama. • Since blocks are not profiled as a box, no reversal work is necessary in the course of fabrication. Also, yard assembly is not necessary. As a result, the schedule of this method is shorter than that of one-unit fabrication method. Since the transportation is done in the form of panels and truss materials, the work quantity increases at the installation site. • A method of confirming that the blocks are assembled correctly at installation site must be studied. It is not recommended to adopt the provisional assembly of the entire structure from the viewpoints of the construction period and costs.	• Schedule conforming to the delivery requirements at site shall be observed. • Transportation plan up to the site and its work shall be executable.	• The transportation unit from the plant shall be panels and truss materials to minimize the transportation volume. • Either block installation method or panel method to mount panels after assembling truss materials is presumed to be adopted at site. However, an arrangement of connection structure of panels and truss members shall be studied to be able to shorten the installation schedule in any case. This study is very effective for one-unit fabrication of rolling gate.	A

Evaluation Criteria: A: Executable B: Executable with serious conditions attached C: Not executable
As for bearing capacity, fabrication method is evaluated by gate leaf weight per unit bearing area, ton/m². When it is less than 5.0 ton/m², our evaluation is rank A. And no less than 5.0 ton/m², our evaluation is rank B.

6. Transportation Method

Chapter 6. Transportation Method

A. Study Cases of Transportation Method

As described in Chapter 4, we have studied the transportation methods on the assumption of the cases shown in Table 6-1 and Table 6-2.

This study applies to the transportation methods of Miter Gate on the Atlantic Ocean side and Rolling Gate on the Pacific Ocean side, each of 2-Lift and 3-Lift configurations, shown in the concept design, and therefore, covers 12 cases in total.

Table 6-1 Study Cases of Miter Gate

Transportation of Miter Gate		
	Transportation Methods	Execution Conditions
Study Case (Ⅰ)	One-unit Transportation	• Gate leaf is fabricated outside Panama. • Gate leaf is assembled into one-unit in the process of yard assembly. • The assembled gate leaf is transported into the bay in the vicinity of the Panama Canal. • The assembled gate leaf is loaded into the semi-submersible vessel by means of a floating crane as the basis. • The assembled gate leaf is towed from the bay in the vicinity of the Panama Canal to the construction site. • The one-unit gate leaf is installed at site. • The gate leaf is installed under the wet condition after the completion of concrete works of the canal.
Study Case (Ⅱ)	Block Transportation to dry dock	• Gate leaf is fabricated outside Panama. • The block divisions of the gate leaf shall satisfy the transportation limit in Panama. • The divided gate leaves are transported to Panama by a vessel. • The divided gate leaves are transported by land from the trade port in Panama to the dry dock by means of trucks. • The divided gate leaves are assembled in the dry dock in Panama, and the one-unit gate leaf is installed at site. The gate leaf is towed by a tugboat from the dry dock to the installation site. • The gate leaf is installed under the wet condition after the completion of concrete works of the canal.
Study Case (Ⅲ)	Block Transportation to the site	• Gate leaf is fabricated outside Panama. • The block divisions of the gate leaf shall satisfy the transportation limit in Panama. • The divided gate leaves are transported to Panama by

		a vessel. • The divided gate leaves are transported by land from the trade port in Panama to the dry dock by means of trucks. • The divided gate leaves are assembled in Panama at site. The gate leaf shall be installed under a dry condition.

Table 6-2 Study Cases of Rolling Gate

Transportation of Rolling Gate		
	Transportation Methods	Execution Conditions
Study Case (I)	One-unit Transportation	• Gate leaf is fabricated outside Panama. • Gate leaf is assembled into one-unit in the process of yard assembly. • The assembled gate leaf is transported into the bay in the vicinity of the Panama Canal. • The one unit gate leaf is loaded into the semi-submerge vessel by means of a floating crane as the basis. • The assembled gate leaf is towed from the bay in the vicinity of the Panama Canal to the construction site. • The assembled gate leaf is installed at site. • The gate leaf is installed under the wet condition after the completion of concrete works of the canal.
Study Case (II)	Block Transportation to Dry Dock	• Gate leaf is fabricated outside Panama. • The block divisions of the gate leaf shall satisfy the transportation limit in Panama. • The divided gate leaves are transported to Panama by a vessel. • The divided gate leaves are transported by land from the trade port in Panama to the dry dock by means of trucks. • The divided gate leaves are assembled in the dry dock in Panama, and the one-unit gate leaf is installed at site. The gate leaf is towed by a tugboat from the dry dock to the installation site. • The gate leaf is installed under the wet condition after the completion of concrete works of the canal.
Study Case (III)	Block Transportation to the Site	• Gate leaf is fabricated outside Panama. • The block divisions of the gate leaf shall satisfy the transportation limit in Panama. • The divided gate leaves are transported to Panama by a vessel.

		• The divided gate leaves are transported by land from the trade port in Panama to the dry dock by means of trucks. • The divided gate leaves are assembled in Panama at site. The gate leaf shall be installed under a dry condition.

B. Transportation Study Conditions

Table 6-3 and Table 6-4 show the study conditions in each case.

Table 6-3 Miter Gate Transportation Conditions

Cases	Loading	Transportation	Inland Transportation	Storage of Blocks
Study Case (I)	Loading equipment employed: FC (FC: Floating Crane) Place: Japan	Place of departure: Japan Place of destination: The Balboa Port* Transportation means: Semi-submersible vessel (Name of vessel: SWAN, MIGHTY SERVANT 2)	None: Miter Gate is delivered on the sea at The Balboa Port, and towed to the construction site by tug boats.	Since more than one gate are transported at a time, they must be moored to meet the installation timing.
Study Case (II)	Place: Japan Miter Gate blocks are carried by a barge from fabricator to the vessel being anchored in harbor. Export declaration is done at the pier of fabricator.	Place of departure: Japan Place of destination: The Balboa Port Transportation means: Vessel	Place of departure: The Balboa Port Place of destination: Dry dock where Miter Gate is scheduled to be assembled Transportation means: Truck	1. The Balboa Port: A temporary storage yard is necessary for custom clearance and land transportation after unloading from the vessel. 2. Inside the premises of manufacturer having a dry dock: A temporary storage yard is necessary for members that are to be assembled in the dry dock.
Study Case (III)	Same as specified above	Same as specified above	Place of departure: The Balboa Port Place of destination: Installation site Transportation means: Truck	1. The Balboa Port: A temporary storage yard is necessary for customs clearance and land transportation after unloading from the vessel. 2. Installation site: A temporary storage yard is necessary for members that are to be assembled at the installation site.

* The miter gate is specified to be transported to The Balboa Port based on the judgment that the study conditions must be set the same for comparing the miter gate and rolling gate with each other. For installing the miter gate on the Atlantic Ocean side as shown in the basic design concept, the freighter must sail around the Cape of Good Hope in South Africa, assuming that the gate leaf must be transported by laying it down horizontally as a requirement. The estimate is calculated on the transportation condition that the miter gate is transported to Balboa port on the Pacific Ocean side.

Table 6-4 Rolling Gate Transportation Conditions

Cases	Loading	Transportation	Inland Transportation	Storage of Blocks
Study Case (I)	Loading equipment employed: FC (FC: Floating Crane) Place: Japan	Place of departure: Japan Place of destination: The Balboa Port Transportation means: Semi-submersible vessel (Name of vessel: SWAN)	None Miter Gate is delivered on the sea at The Balboa Port, and towed to the installation site by tugboats.	Since more than one gate are transported at a time, they must be moored to meet the installation timing.
Study Case (II)	Place: Japan Miter Gate blocks are carried by a barge from fabricator to the vessel being anchored in harbor. Export declaration is done at the pier of fabricator.	Place of departure: Japan Place of destination: The Balboa Port Transportation means: Vessel	Place of departure: The Balboa Port Place of destination: Dry dock where Rolling Gate is scheduled to be assembled Transportation means: Truck	1. The Balboa Port A temporary storage yard is necessary for customs clearance and land transportation after unloading from the vessel. 2. On the premises of manufacturer having a dry dock: A temporary storage yard is necessary for members that are to be assembled in the dry dock.
Study Case (III)	Same as specified above	Same as specified above	Place of departure: The Balboa Port Place of destination: Installation site Transportation means: Truck	1. The Balboa Port: A temporary storage yard is necessary for customs clearance and land transportation after unloading from the vessel. 2. Installation site: A temporary storage yard is necessary for members that are to be assembled at the installation site.

6.1 Miter Gate

6.1.1 One-unit Transport

A. Outline of Transportation Procedure

We have studied one unit transport assuming that large blocks were fabricated in Japanese manufacturing shop. Fig.6.1.1-1 shows the transportation flow in one-unit transport.

Since gate leaves are large blocks, they may be towed to Panama as transportation means. However, they were decided to be transported by loading them on the deck of a transport vessel as the basic requirement by taking into consideration the avoidance of the damage to the gate leaves during transportation, protection of painting film, and other quality assurance.

B. Plan for Temporary Facilities

(a) Loading with a Huge Floating Crane

A floating crane is used for lifting a large block weighing 1,494 tons.

The Miter Gate leaf weight becomes within a range of 1,210 tons to 1,494 tons when taking both cases of 2-lift and 3-lift types into account. Accordingly, the floating crane to be used was presumed to have a hoisting capacity of 2200 tons.

For loading using a floating crane, the floating crane moves backward from the pier after hoisting up the gate leaf, the transport ship is introduced between the pier and the floating crane, and then, the gate leaf is lowered onto the transport ship. For this loading method, refer to the transportation flow in Fig.6.1.1-1. Since the working range of the floating crane hook depends upon the weight of the hoisting load, the distance from the pier to the center of gravity of the gate leaf must be fully reviewed before deciding the yard assembly place. Fig.6.1.1-2 shows the data on a 2,200-ton class floating crane.

(b) Ocean Transportation

Since no floating crane is available for unloading in Panama, a semi-submersible vessel is used so as to float cargoes on the surface of the sea by submersing the vessel. For the unloading method by a semi-submersible vessel, the gate leaf is let float on the sea surface when the vessel is semi-submerged, and then, the floating gate leaf is towed by tug boats or the like. Refer to the transportation flow diagram in Fig.6.1.1-1.

Fig.6.1.1-3 and Fig.6.1.1-4 show the reference data on the semi-submersible vessels. The vessels in these data are named SWAN and Mighty Servant 3

which were selected assuming that two miter gates are transported at a time.

(c) Draft

When transporting the gate leaf by a semi-submersible vessel, the drafts of both gate leaf and semi-submersible vessel become very important for judging whether the transportation is possible or not.

Because the unloading is impossible if the distance from the deck face of the vessel to the sea surface is less than the gate leaf draft when the semi-submersible vessel submerges to the maximum extent.

The distance from the deck face of the vessel to the sea surface when the semi-submersible vessel submerges to the maximum extent can be calculated as follows:

SWAN Depth 13.30m
Draft submerged 20.60m
Deck face draft under the submerged condition
= 20.60 - 13.30 = 7.3m

MIGHTY SERVANT 3 Depth 12.00m
Draft submerged 22.00m
Deck face draft under the submersed condition
= 22.00 - 12.00 = 10.00m

Since the gate leafs of the Miter Gate are transported by laying it down horizontally, its draft does not become larger than 4.15m, so that it can be judged as transportable even if a clearance of 0.5m between the vessel deck and the gate leaf is taken into account.

(d) Details of Shipping Method

Two gates are assumed to be transported at a time by taking the fabrication schedule and construction schedule on site, securing of a temporary storage yard for blocks, and other circumstances into consideration to say nothing of the efficiency of transportation. In case of 3-Lift, for example, 16 gate leaves are transported by four vessels separately. In case of 2-Lift, 12 gate leaves are transported by three vessels separately.

Table 6.1.1-1 shows the details of shipping method, and Fig.6.1.1-5 to Fig.6.1.1-11 show the stowage proposal for transportation.

Table 6.1.1-1 Details of Shipping Method

	Shipping Method	Cargo to be Shipped	Ship's Name	Stowage proposal Drawing No.
3-Lift	Split Four Shipment (To Balboa)	1st Ship with (4×M-T1)	Swan	Fig.6.1.1-5
		2nd Ship with (4×M-T2)	Swan	Fig.6.1.1-6
		3rd Ship with (4×M-T3/T4)	Swan	Fig.6.1.1-7
		4th Ship with (4×M-T3/T4)	Swan	Fig.6.1.1-8
2-Lift	Split Three Shipment (To Balboa)	1st Ship with (4×M-T1)	Swan	Fig.6.1.1-9
		2nd Ship with (4×M-T2)	M. Servant 3	Fig.6.1.1-10
		3rd Ship with (4×M-T3/T4)	M. Servant 3	Fig.6.1.1-11

C. Transportation Schedule

Fig.6.1.1-12 shows a transportation schedule plan under the above conditions.

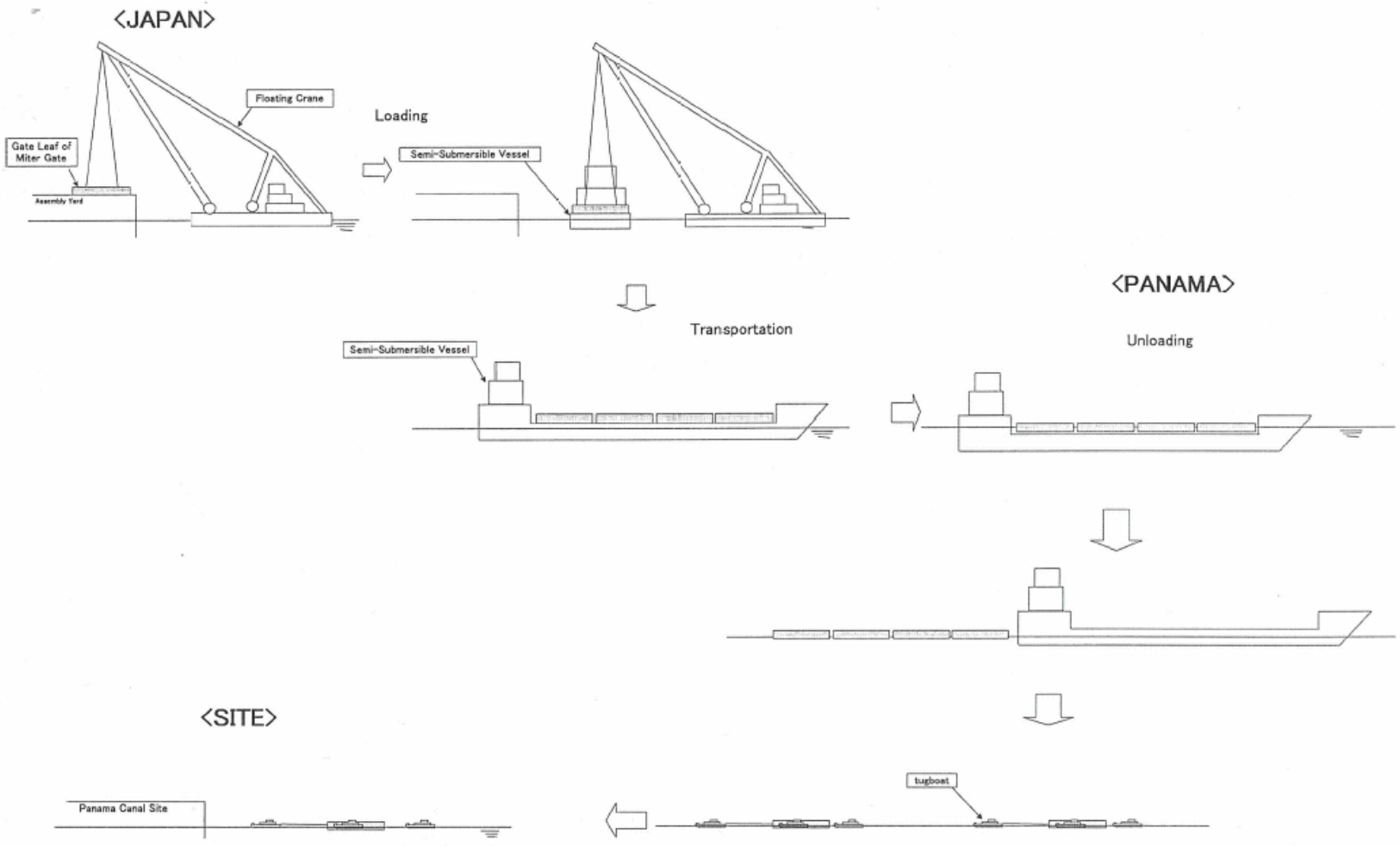

Fig.6.1.1-1 The transportation flow of Miter Gate in one-unit transport

SURUGA

HULL SECTION

Length:	90.0m
Width:	41.0m
Depth:	7.0m

LOAD LIFTING CONDITIONS

	condition		1	2	3	4
Jib angle		deg	65	55	45	30
Lifting load		ton	2,200	1,200	700	300
Outreach	Fore hook	m	40.0	57.7	73.6	92.6
	Aft hook	m	34.0	50.4	65.2	83.1
Lifting height	Fore hook	m	97.3	86.0	72.0	47.0
	Aft hook	m	90.0	80.0	67.5	44.5

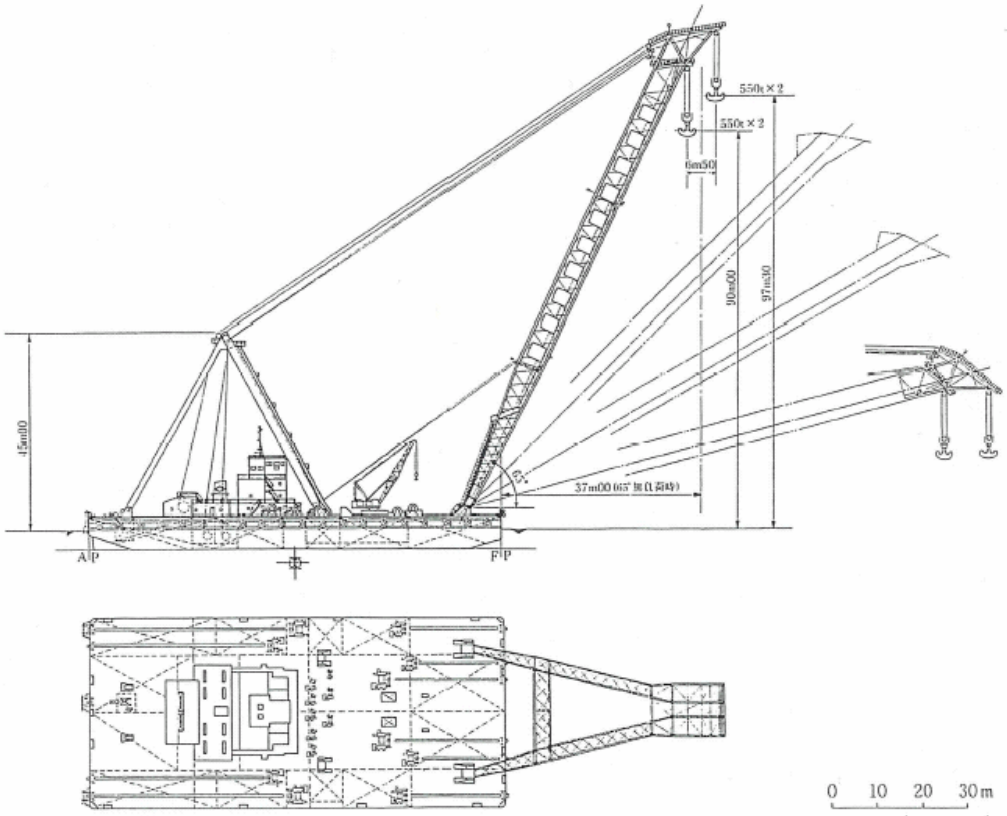

Fig.6.1.1-2 Floating Crane SURUGA(駿河) (2,200 Tons class)

SWAN, TERN, SWIFT & TEAL

OPEN-DECK HEAVY-LIFT AND PRODUCT CARRIERS

These semi-submersible carriers offer the advantage of dual cargo capacity. All vessels can carry heavy lifts up to 25,000 tons on their 126.8 by 31.6 metre deck. They can submerge to load and discharge cargo by means of the float-on/float-off method. Roll-on/roll-off, skid-on/skid-off and lift-on/lift-off procedures – or any combination of these methods – can also be employed.

The Swan class vessels are particularly unique for their dual cargo capacity: twelve of the fifty epoxy-coated ballast tanks which enable the vessel to submerge, can also be used for carrying up to 32,000 cu.m. of clean product cargo. The ships can swiftly be converted from heavy-lift mode into product carriers, and vice versa.

BALLASTING/DEBALLASTING

SWAN/TERN:

4 ballast pumps electrically driven.

Total capacity of 2,800 cu.m/hr.

3 cargo pumps electrically driven.

Total capacity of 3,000 cu.m/hr.

SWIFT/TEAL:

5 ballast pumps electrically driven.

Total capacity of 3,900 cu.m/hr.

3 cargo pumps electrically driven.

Total capacity of 3,000 cu.m/hr.

MAIN ENGINES

SWAN/TERN:	Frederikstad B&W 9,642 kW. Type 6L67 GFCA.
SWIFT/TEAL:	**Mitsui B&W 9,642 kW. Type 6L67 GFCA.**

AUXILIARY ENGINES

SWAN/TERN:

3 diesel alternators, 440 V, 60 Hz, 630 kW.

1 emergency aggregate, 440/220 V, 60 Hz, 135 kW.

SWIFT/TEAL:

3 diesel alternators, 440 V, 60 Hz, 800 kW.

1 emergency diesel generator, 440 V, 60 Hz, 285 kW.

NAVIGATIONAL EQUIPMENT

Two radar systems; ARPA radar; GPS satellite navigation equipment; direction finder; echo-sounder; gyro compass; autopilot; magnetic speed log; weather fax etc.

COMMUNICATION EQUIPMENT

GMDSS satellite communication system with telephone, telex and facsimile in addition to standard radio and telex facilities, as well as SSB etc. Internal telephone system and talkback system.

CLASSIFICATION

Det Norske Veritas + 1A1 General cargo carrier or tanker for oil and caustic soda. COW, INERT, PST, EO, SBM. Register notation: BIS DK(+), PWDK, SBT, PL.

CALL SIGN

SWAN:	PJYI
TERN:	PJXY
SWIFT:	**PJYJ**
TEAL:	**PJWD**

PRINCIPAL CHARACTERISTICS

SWAN, TERN, SWIFT & TEAL

	SWAN/TERN	SWIFT/TEAL
length o.a.	*180.50*	*180.82 m*
length b.p.	*170.95*	*170.95 m*
breadth	*32.26*	*32.26 m*
depth	*13.30*	*13.30 m*
draft sailing	*9.97*	*10.00 m*
draft submerged	*20.60*	*20.60 m*
deadweight	*32,650*	*32,187 t*
gross tonnage	*22,788*	*22,835 t*
net tonnage	*9,531*	*9,573 t*
cargo tank capacity	*32,928*	*32,924 cu.m*
deck space	*126.80 x 31.60*	*126.80 x 31.60 m*
deck load	*16-20*	*16-20 t/sq.m*
SPEED		
service	*14*	*14 kn*
maximum	*15.8*	*15.8 kn*
range	*65*	*65 days*

Fig.6.1.1-3 Semi-Submersible Vessel (1), SWAN -1/2

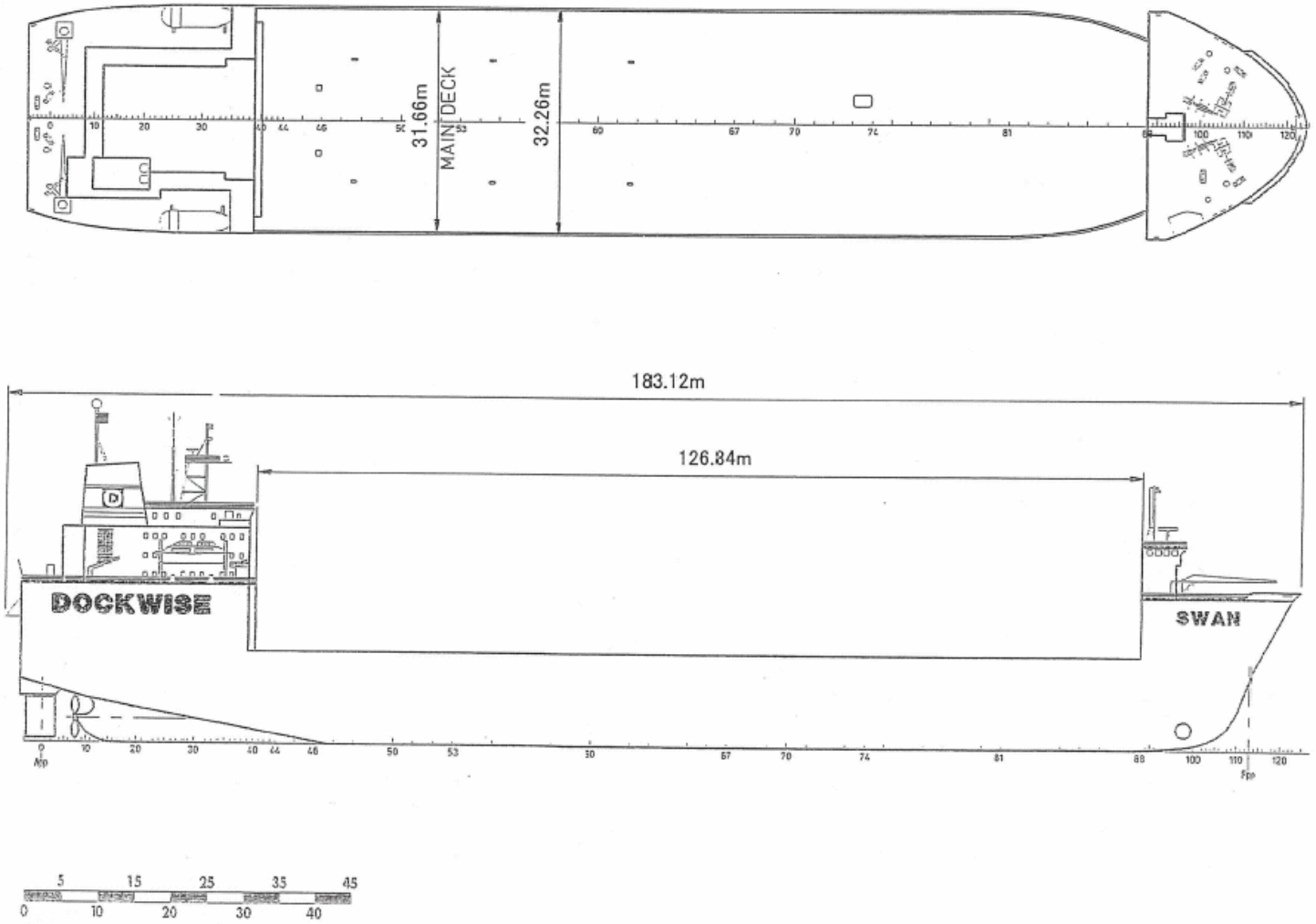

Fig.6.1.1-3 Semi-Submersible Vessel (1), SWAN -2/2

MIGHTY SERVANT 2&3

OPEN-DECK HEAVY-LIFT CARRIERS

The semi-submersible heavy-lift carriers Mighty Servant 2 & 3 have open decks of 40 metres wide, with lengths of 130 and 140 metres, respectively. The option of removing the aft buoyancy casings offers additional flexibility, allowing cargo overhang on three sides of the vessel. As a result, Mighty Servant carriers are ideally suited for the safe, efficient and economical transportation of large cargoes.

A Mighty Servant can move cargoes weighing up to 25,000 tons on deck. The vessels also have a cargo hold of some 12,000 cu.m. for the stowage of auxiliary items. For loading and discharging, the carriers can be submerged or ballasted to level with the quay, allowing any combination of float-on/float-off, roll-on/roll-off, skid-on/skid-off and lift-on/lift-off methods. Both vessels have a 250-ton on board crane for cargo hold loading and discharging.

BALLASTING/DEBALLASTING

Compressed air – 12,000 cu.m/hr.
Pumps – 4,000 cu.m/hr.

MAIN ENGINES

2 x 6,771 kW Stork-Werkspoor 12TM410 diesel generator sets, driving two c.p. propellers by four E-motors of 3,100 kW each. Two propellers can be driven by one motor for maximum flexibility.

AUXILIARY ENGINES

Two diesel generators 440 V/60 Hz, 190 kW or 380 V/50 Hz, 150 kW.
One emergency diesel generator 440 V/60 Hz, 190 kW or 380 V/50 Hz, 150 kW.
One turbo generator set 440 V/60 Hz, 820 kW.

ANCHORS AND CHAINS

Anchor fwd	2 pcs 10 tons each
aft	2 pcs 10 tons each
Chains	2 pcs 495 m each
dia	87 mm
Wires	1 pc 1200 m
dia	78 mm

CARGO HANDLING

Hydraulic winch	6 pcs 10 tons each
Cranes	1 pc 250 tons
	1 pc 5 tons

WORKSHOP

A fully-equipped workshop is available on board for maintenance and repair work to the cargo.

NAVIGATIONAL EQUIPMENT

Two radar systems; ARPA radar; GPS satellite navigation equipment; direction finder; echo-sounder; two gyro compasses; autopilot; magnetic speed log; weather fax etc.

COMMUNICATION EQUIPMENT

GMDSS satellite communication system with telephone, telex and facsimile in addition to standard radio and telex facilities, as well as SSB etc. Internal telephone system and talkback system.

ACCOMMODATION

Single cabins for officers and crew. Additional accommodation for riders. All accommodation can be heated and air-conditioned.

CLASSIFICATION

LRS ⊕ 100 A1 + Non-perishable cargoes

CALL SIGN	
Mighty Servant 2	PJP5
Mighty Servant 3	PJPT

PRINCIPAL CHARACTERISTICS

MIGHTY SERVANT 2&3

	2	3
length o.a.	170.19	181.23 m
length b.p.	158.86	168.93 m
breadth	40.00	40.00 m
depth	12.00	12.00 m
draft sailing	9.11	9.06 m
draft submerged	22.00	22.00 m
gross tonnage	21,162	22,391 tons
deadweight	25,743	27,720 tons
deck space	40 x 130	40 x 140 m
deck load	19-25	19-25 tons/sq.m
cargo hold	90 x 16 x 7.5	100 x 16 x 7.5 m
hatch	31 x 14.6	31 x 14.6 m
SPEED		
service	14	14 kn
maximum	15	15 kn
range	44	44 days

Fig.6.1.1-4 Semi-Submersible Vessel (2), Mighty Servant 3 -1/2

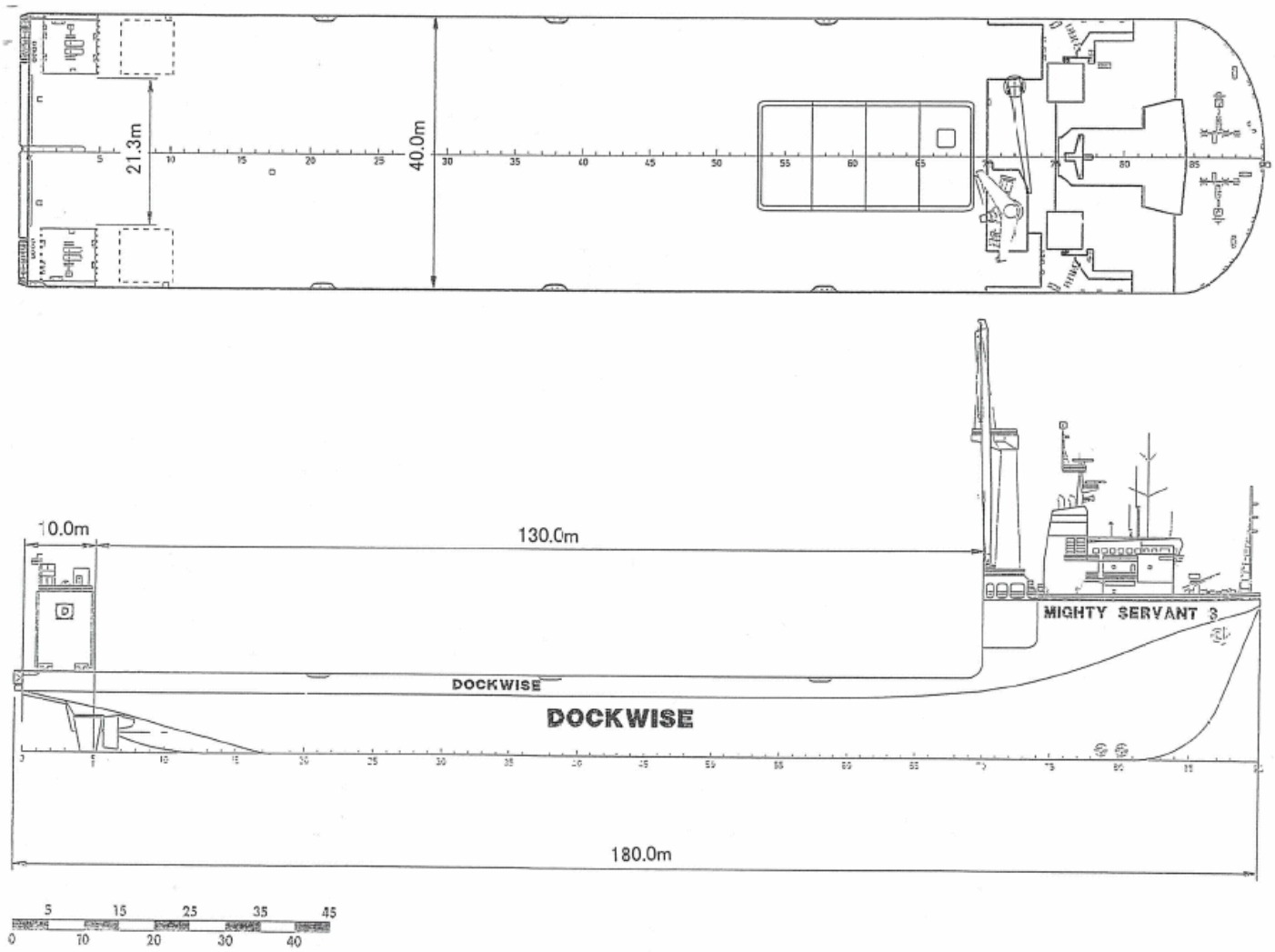

Fig.6.1.1-4 Semi-Submersible Vessel (2), Mighty Servant 3 -2/2

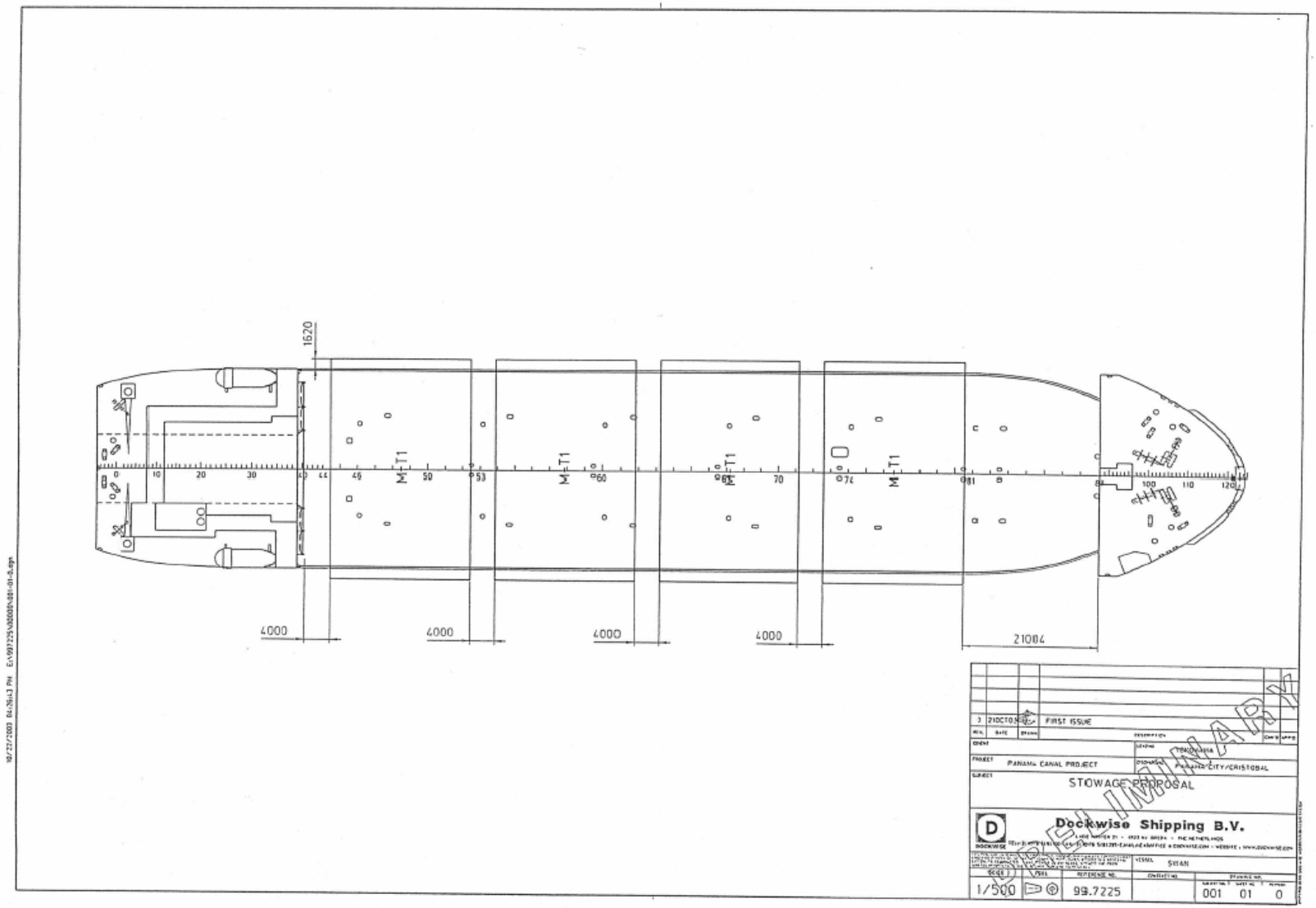

Fig.6.1.1-5 Stowage Proposal of 3-Lift Miter gate for One-unit Transportation, 1st Ship

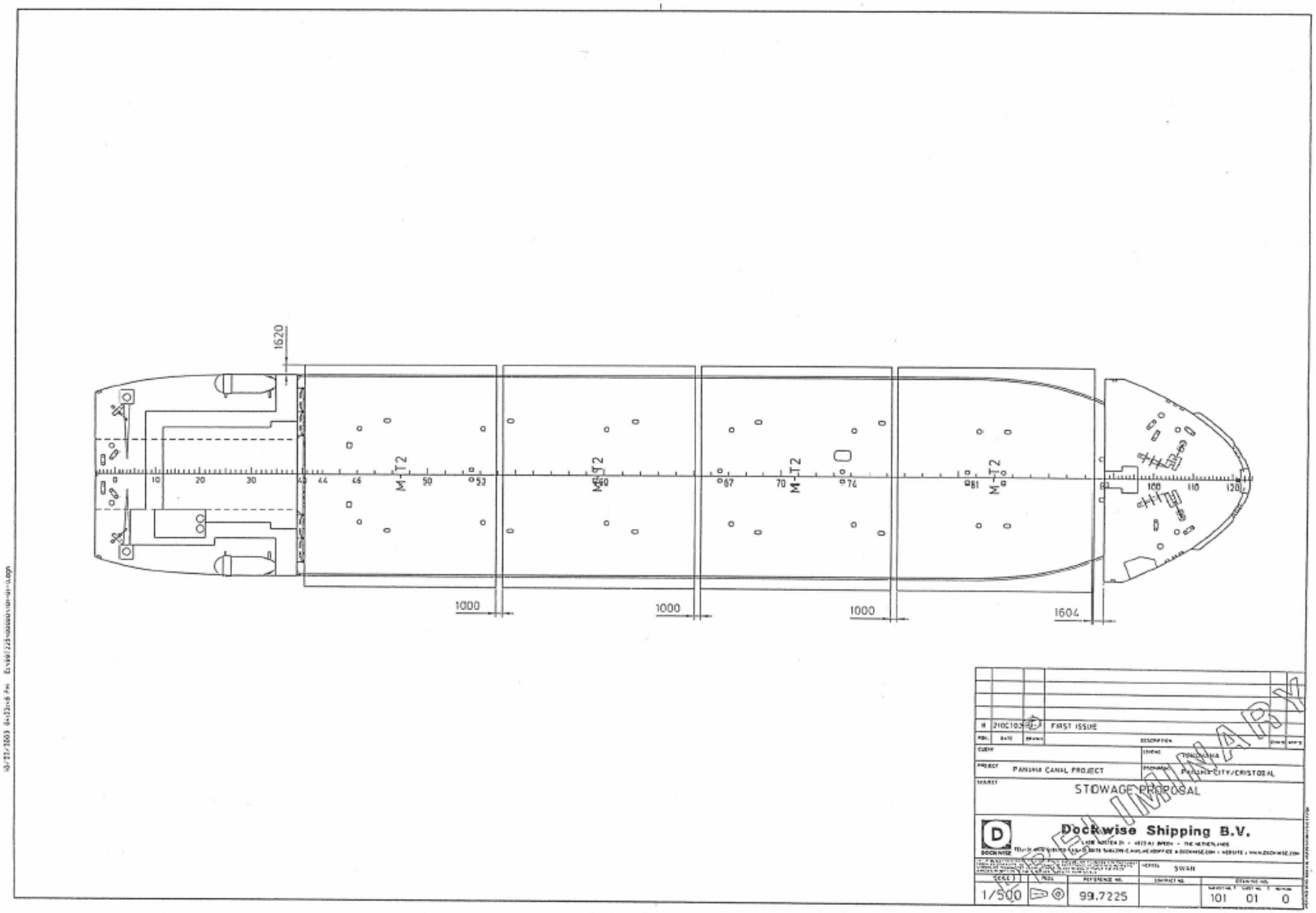

Fig.6.1.1-6 Stowage Proposal of 3-Lift Miter gate for One-unit Transportation, 2nd Ship

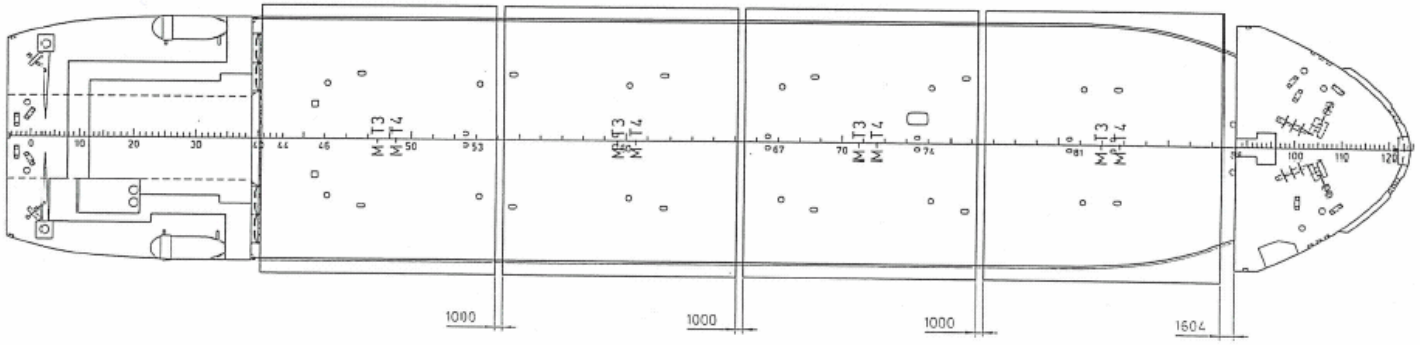

REV.	DATE	DRAWN	REMARKS	DWN	APPD
0	2 OCTOBER		FIRST ISSUE		

CLIENT

PROJECT: PANAMA CANAL PROJECT

SUBJECT: STOWAGE PROPOSAL

DRAWN: TOKUMARU

MANAGER: PANAMA CITY/CRISTOBAL

Dockwise Shipping B.V.

VESSEL: SWAN

SCALE	% FOR	REPO REFERENCE NO.	CONTRACT NO.	DRAWING NO.
1/500		99.7225		201 01 0

PRELIMINARY

Fig.6.1.1-7 Stowage Proposal of 3-Lift Miter gate for One-unit Transportation, 3rd Ship

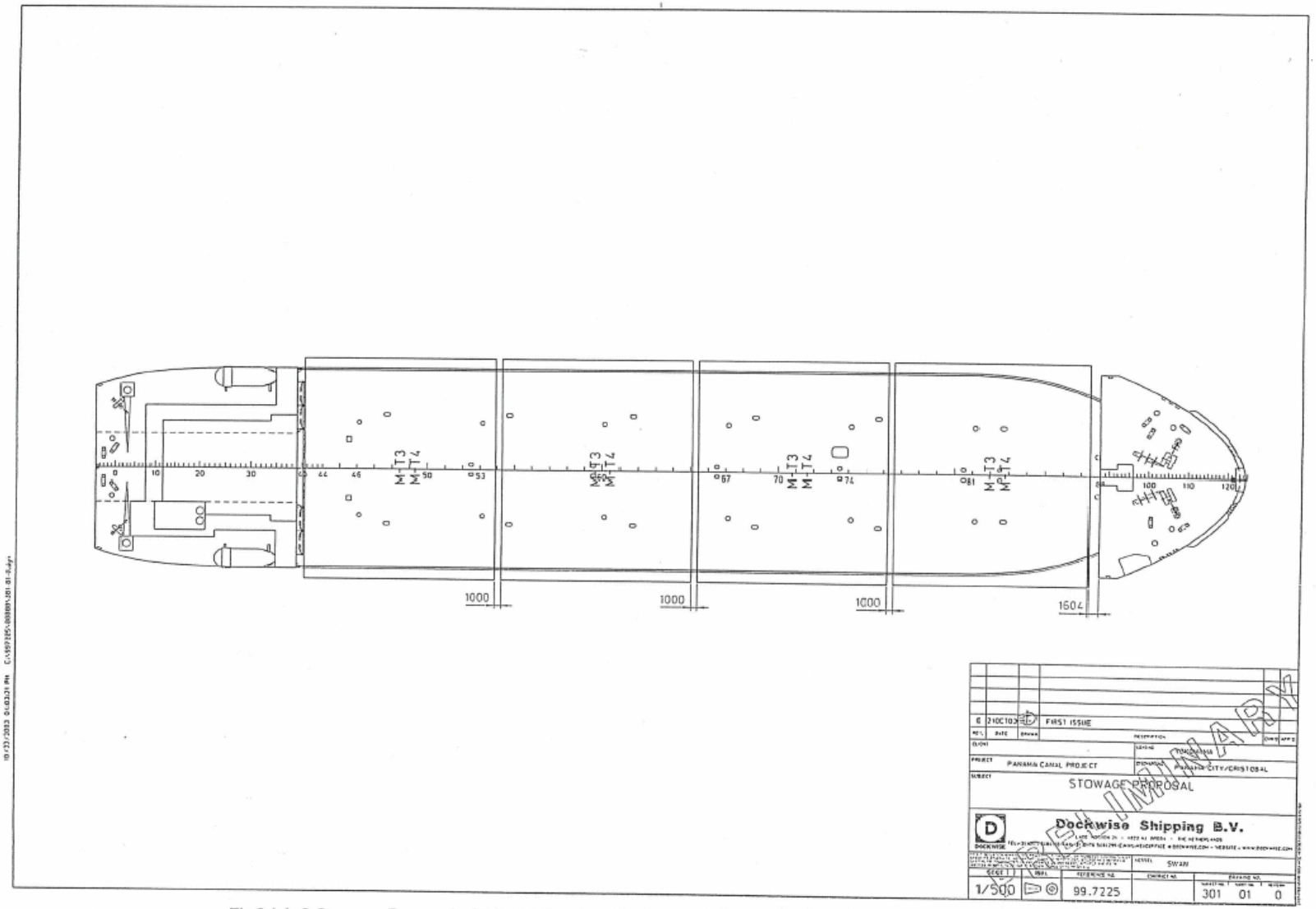

Fig.6.1.1-8 Stowage Proposal of 3-Lift Miter gate for One-unit Transportation, 4th Ship

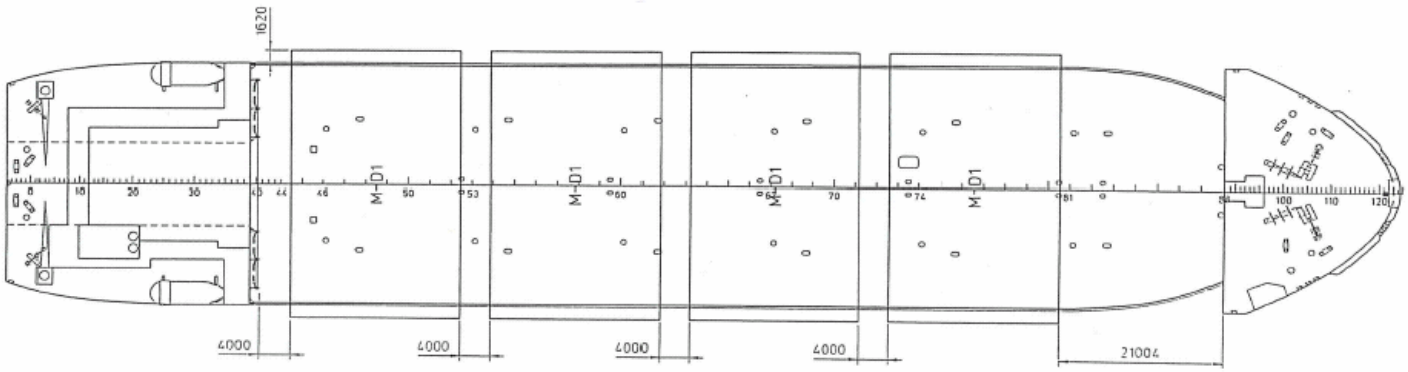

B	21OCT03		FIRST ISSUE
REV.	DATE	DRAWN	DESCRIPTION

CLIENT

PROJECT: PANAMA CANAL PROJECT

LOCATION: PANAMA

DESIGNED: PANAMA CITY/CRISTOBAL

SUBJECT: STOWAGE PROPOSAL

Dockwise Shipping B.V.

VESSEL: SWAN

SCALE: 1/500

REFERENCE NO.: 99.7225

DRAWING NO.: 401 01 0

PRELIMINARY

Fig.6.1.1-9 Stowage Proposal of 2-Lift Miter gate for One-unit Transportation, 1st Ship

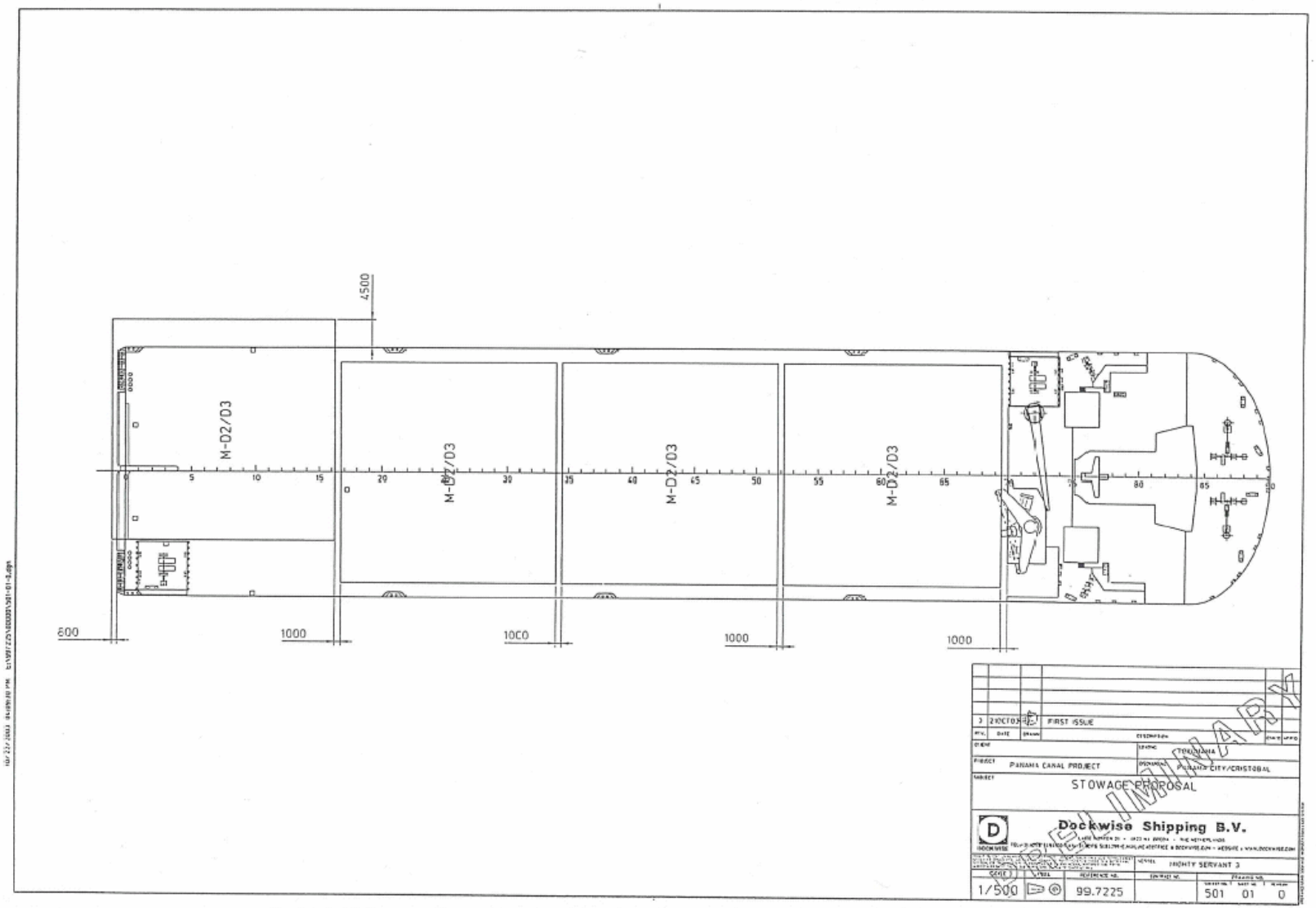

Fig.6.1.1-10 Stowage Proposal of 2-Lift Miter gate for One-unit Transportation, 2nd Ship

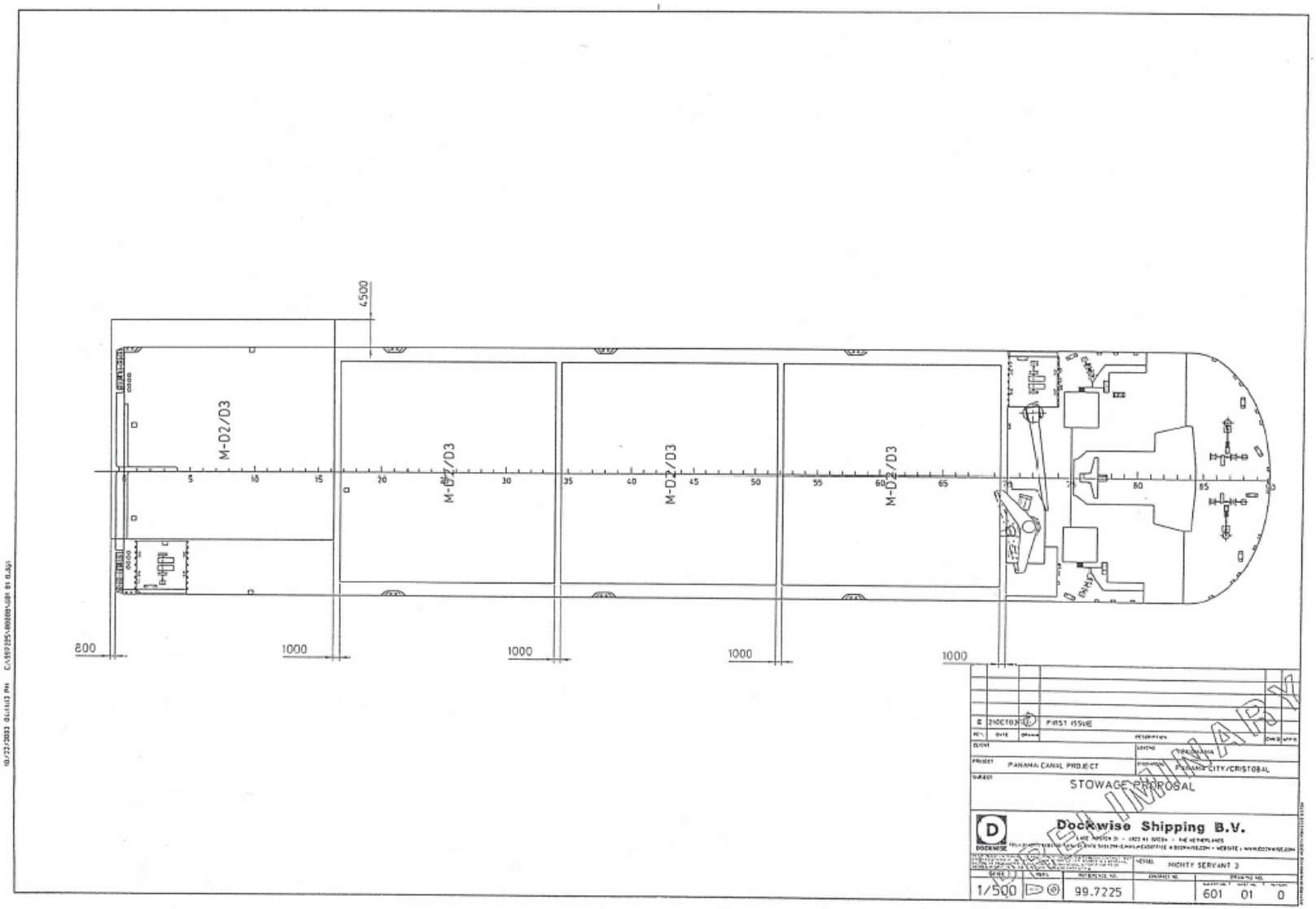

Fig.6.1.1-11 Stowage Proposal of 2-Lift Miter gate for One-unit Transportation, 3rd Ship

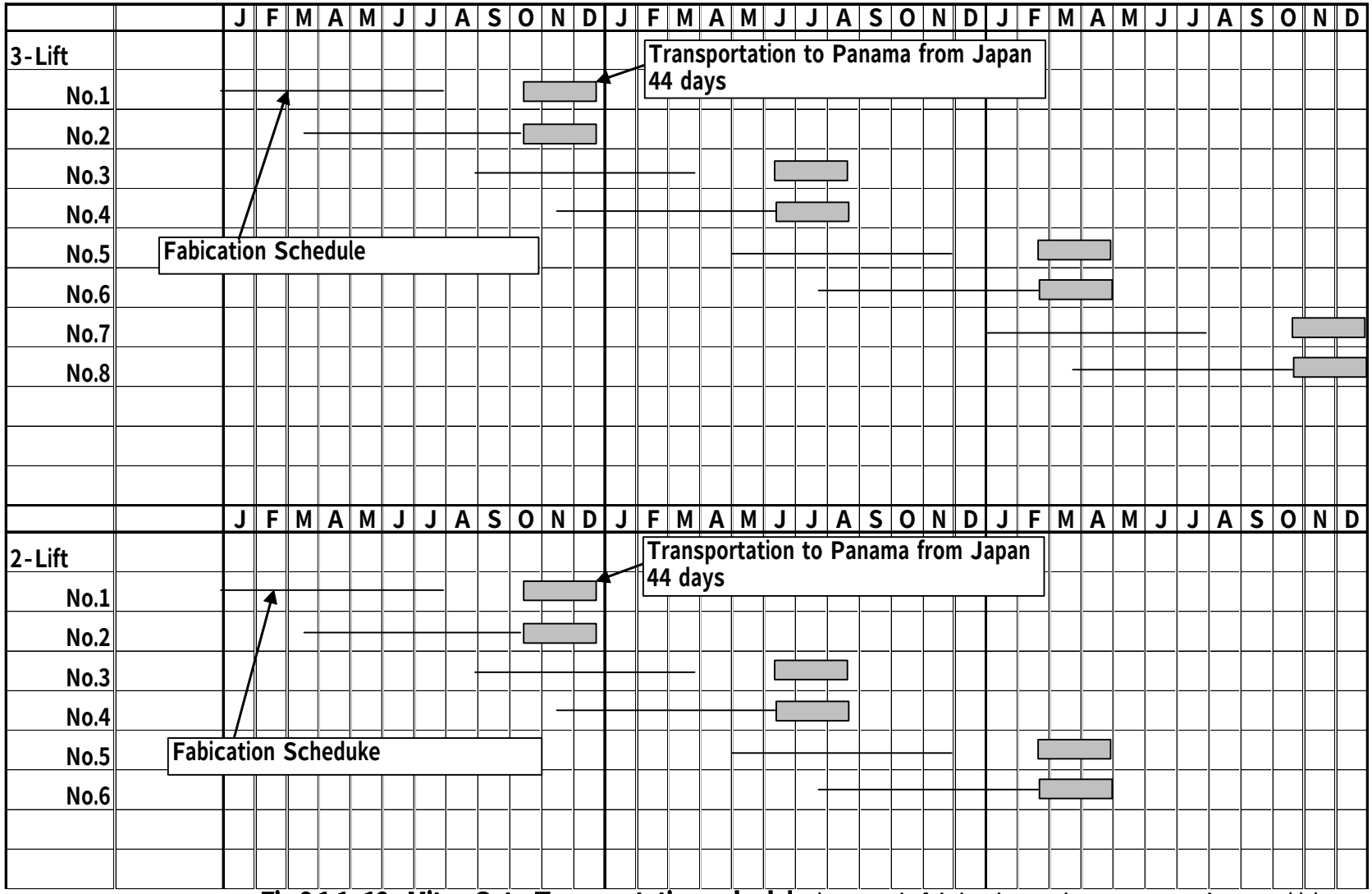

Fig.6.1.1-12 Miter Gate Transportation schedule (One-unit fabrication, Miter Gate, Study case (I))

6.1.2 Block Transport

A. Outline of Transportation Procedure

We have studied the block transport assuming that blocks were fabricated in Japanese manufacturing shop. Fig.6.1.2-1 shows the transportation flow in case of block transport.

B. Plan for Temporary Facilities

(a) Loading

On the assumption that the shop is equipped with a pier, the export declaration is done at the pier and the blocks are carried to a vessel by means of barges.

(b) Ocean transportation

Vessels fitted with cranes are used by taking the loading and unloading efficiency into account. Fig.6.1.2-2 shows the reference data of the vessel fitted with cranes as an example.

(c) Study cases

In case of the block transport, two gates are assumed to be transported at a time in the same way as in one-unit transport.

Assuming that the transportation quantity is proportional to the freight tonnage in case of block transport, we studied the transport of one gate leaf having the maximum size out of 2-lift and 3-lift gate leaves.

Table 6.1.2-1 shows the studied transportation volume.

Table 6.1.2-1 Miter Gate Packing List for Block Unit Transport (2-Lift North Gate (Double skin) Type)

Numbers of pieces	Total Weight (ton)	Total Volume (m^3)
230	3237	10265

For the detail packing, refer to Fig.6.1.2-2 (Packing List for Block transportation Miter Gate, 2-Lift)

Since the degree of freedom of the transport frequency and transportation quantity is large as compared with one-unit transport, the optimum transportation case must be fully reviewed at the actual execution time. Because of many members, how to reduce the transport frequency becomes an important factor for reducing the transportation expenses. Since the storage place including temporary storage yards costs much, the time

schedule for fabrication, transportation and construction schedule must be programmed minutely in advance.

C. Transportation Schedule

Fig.6.1.2-3 shows a transportation schedule plan under the above conditions.

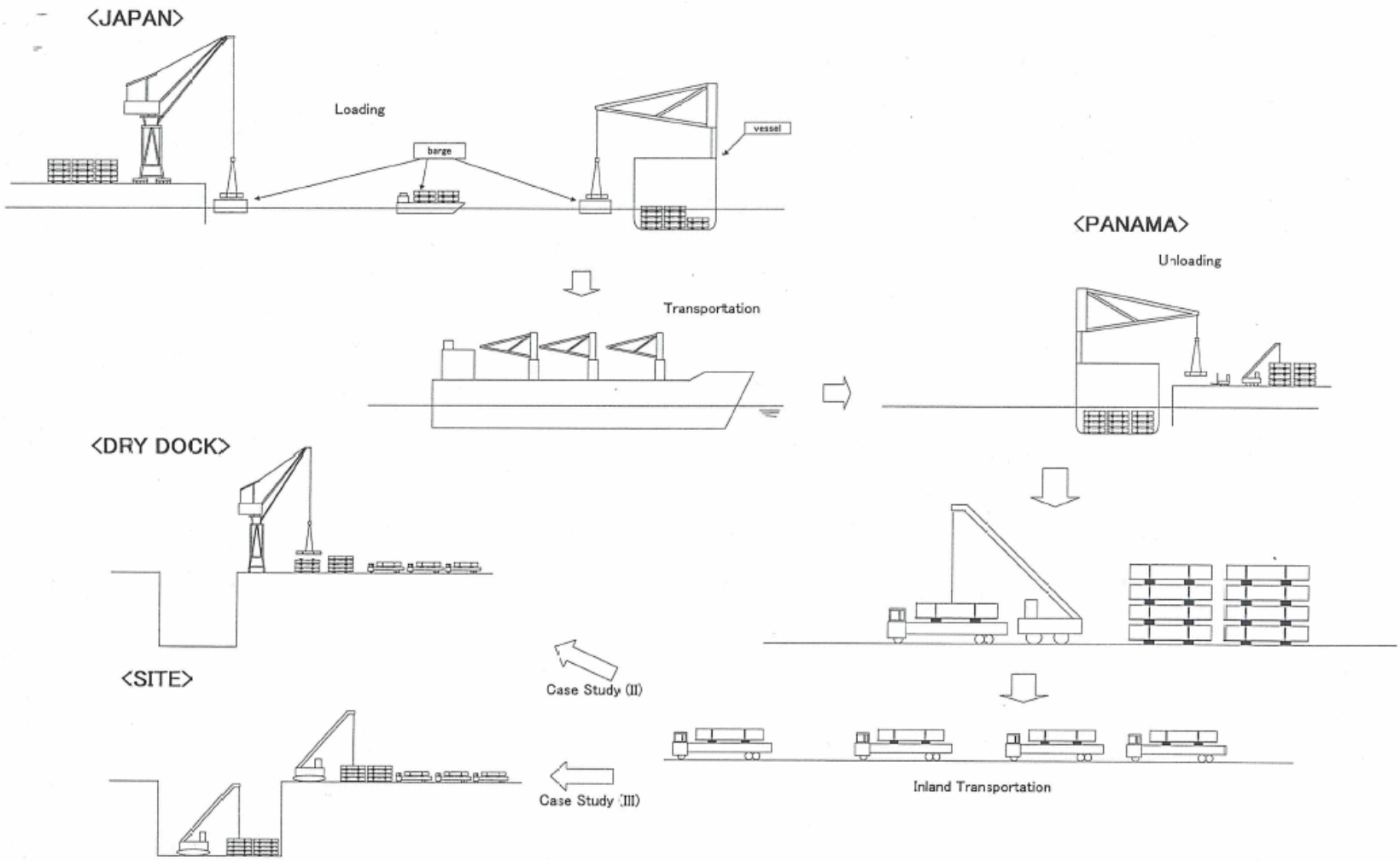

Fig.6.1.2-1 The transportation flow of Miter Gate in block transport

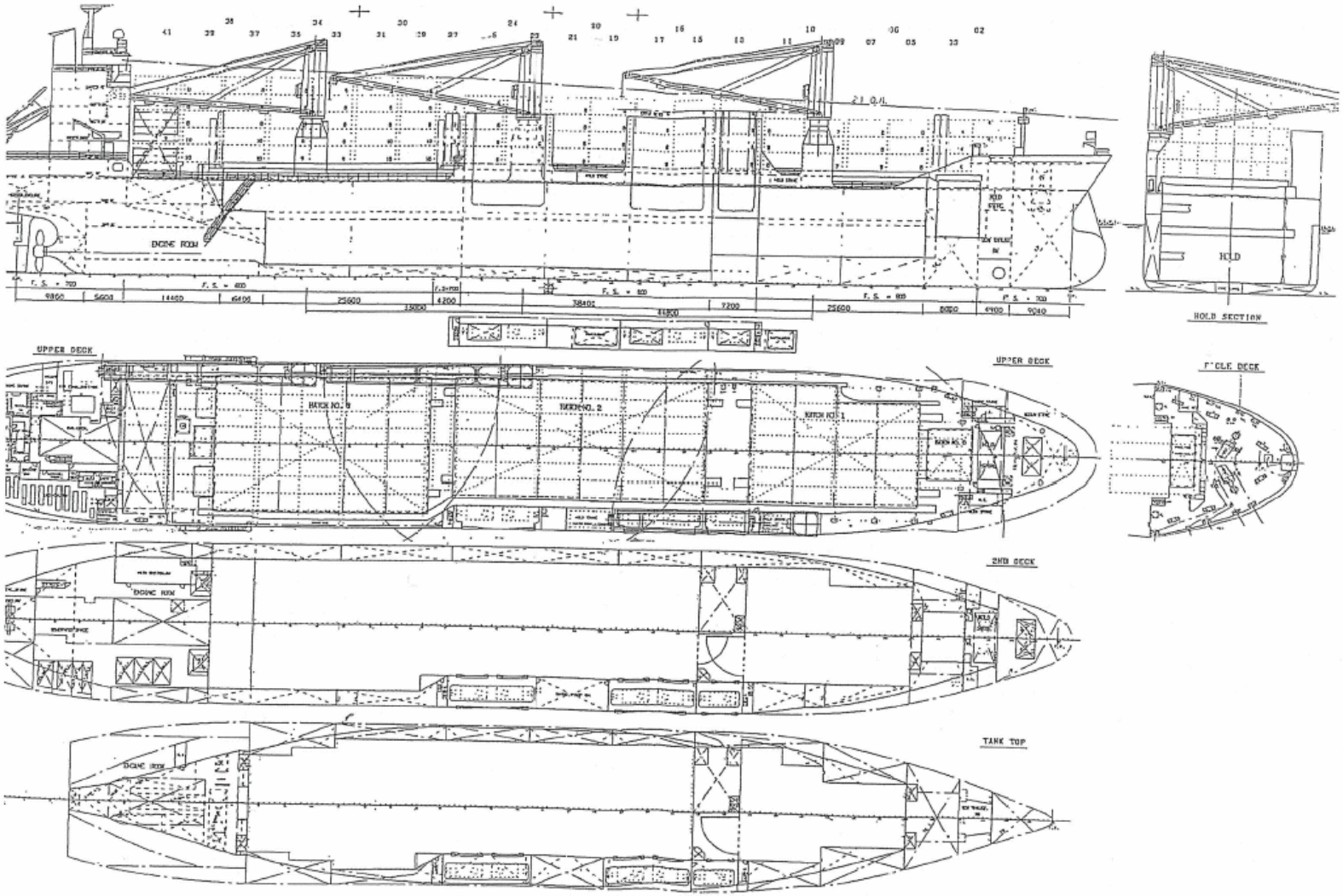

Fig.6.1.2-2 A vessel with deck cranes for Block Transportation -1/2

CLASS		LLOYD'S +100 A1 + LMC UMS LA NAV1
		strengthened for heavy cargoes
Ice Class Finnish/Swedish		1A
PRINCIPAL DIMENSIONS		
Length over all		168.14 m
Breadth moulded		25.20/25.30 m
Height in hold as SID		14.30 m
Height in lower hold as TWD		3 heights 3.30, 7.00 or 10.25 m
Height in tween deck as TWD		3 heights 9.90, 6.20 or 2.95 m
Design draft		10.00 m
Max summer draft		10.65 m *
GT		abt 16,800
NT		abt 6,900
DEADWEIGHT all told	design draft	abt 18,900/18,275 mt (excl/incl TWD)
	max summer draft	abt 21,150/20,525 mt (excl/incl TWD) *
CAPACITY	grain=bale	hold 0 14,000 cbft 400 m³
		hold 1 179,000 cbft 5,050 m³
		hold 2/3 662,000 cbft 18,750 m³
		total 855,000 cbft 24,200 m³
		if tween deck installed 63,000 cbft/1,780 m³ less in holds
FLOOR SPACE	tank top	total 1,625 (no 0: 50 m², no 1: 340 m², no 2/3: 1,235 m²)
	tween deck	total 1,840 m2 (no 1: 425 m², no 2/3: 1,415 m²)
	weather deck	total 2,800/1,810 m² (no 0: 50 m², no 1: 425 m², no 2: 685 m², no 3: 650 m²)
AIR CHANGES (basis empty holds)		abt 20 x per hour
CONTAINER INTAKE		
Hold	units	478 TEU
Deck	units	632 TEU
Total	units	1,110 TEU
Max size		height up to 9'6", width up to 2,500 mm
		limited quantity alternative dimensions such as length 45 ft
Power available for reefer connections		up to 800/900 kW
SIDEPORTS		**5 side shifters, each 16t SWL, 500t capacity per hour**
HATCHES	weather deck	no 0: 6.50 x 7.50 m no 1: 25.60 x 17.80/15.20 m
		no 2: 38.40 x 17.80 m no 3 25.60 x 20.40 m
		steel, end folding type
	tween deck	no 1: 25.60 x 17.80/15.20/10.10 m no 2: 38.40 X 17.80 m
		under crossbeam: 4.20 x 17.80 m no 3: 25.60 x 20.40 m
		consisting of 18 steel pontoons;
		1 of 6.37 x 17.72 m 2 of 6.37 x 10.02 m
		1 of 6.37 x 15.12 m 5 of 6.37 x 17.72 m
		2 of 3.17 x 17.72 m 4 of 6.37 x 20.32 m
		2 of 1.50 x 20.32 m 1 of 4.20 x 17.72 m
Bulkheads/compartments		removable pontoons up to 14 compartments at TEU interval
MAXIMUM LOAD		
Weather deck hatch covers		1.75 t/m² weatherload 2.00 t/m² payload
Tween deck hatch covers		hold 1: 7.5 t/m², hold 2: 5.5 t/m², hold 3: 5.0 t/m²
Tank top		20.0 t/m²
DECK CRANES combinable		
Tons/reach		**3 of 120 mt SWL/14m and 50 mt SWL/30m**
Position		2 x PS (aft and mid) and 1 x SB (forward)
MAIN ENGINE		Wärtsilä 16;400 HP/12,060 kW Bowthruster 1,155 HP/850 kW
Speed	ballast	abt 20.0 knots
	design draft	abt 19.6 knots
	max laden	abt 19.2 knots
Fuel consumption per day		abt 45 mt IFO 380 cSt
		no MDO at sea, except for manoeuvring
BUNKER CAPACITY		
Intermediate Fuel Oil		1,700 m³
Marine Diesel Oil		180 m³
BALLAST CAPACITY		7,200 m³
Vessels are under construction; all particulars estimated		* pending

Fig.6.1.2-2 A vessel with deck cranes for Block Transportation -2/2

Table 6.1.2-2 Packing List for Block transportation, Miter Gate, 2-Lift

Item	No.	Item Name		Quantities	Size (m) Width	Length	Height	UNIT Weight (ton)	Total Weight (ton)	UNIT Volume (m3)	F/L (ton or m3)	Estimated Quantities	Package Style
Miter Gate North Gate(Doble Skin)Type				Cleare Span	61.00 m				Gate Height 34.50 m				
1	Gate Leaf												
		Gate Body	BL No.1-1	4	2.5	7.00	2.3	19.0	76.00	40.25	40.25	161	Bare
			BL No.2-1	4	2.5	7.00	2.3	19.0	76.00	40.25	40.25	161	Bare
			BL No.2-2	4	2.5	7.00	2.3	19.0	76.00	40.25	40.25	161	Bare
			BL No.2-3	4	2.5	7.00	2.3	19.0	76.00	40.25	40.25	161	Bare
			BL No.3-1	4	2.5	6.50	2.3	18.0	72.00	37.38	37.38	150	Bare
			BL No.4-1	4	2.5	9.45	1.85	19.0	76.00	43.71	43.71	175	Bare
			BL No.4-2	2	2.5	12.00	2.3	25.0	50.00	69.00	69.00	138	Bare
			BL No.4-3	4	2.5	9.45	2.3	22.5	90.00	54.34	54.34	217	Bare
			BL No.4-4	2	2.5	12.00	1.85	21.0	42.00	55.50	55.50	111	Bare
			BL No.5-1	4	2.3	9.45	1.85	14.5	58.00	40.21	40.21	161	Bare
			BL No.5-2	2	2.3	12.00	2.3	17.0	34.00	63.48	63.48	127	Bare
			BL No.5-3	4	2.3	9.45	2.3	16.0	64.00	49.99	49.99	200	Bare
			BL No.5-4	2	2.3	12.00	1.85	14.5	29.00	51.06	51.06	102	Bare
			BL No.6-1	4	2.3	9.45	1.85	14.0	56.00	40.21	40.21	161	Bare
			BL No.6-2	2	2.3	12.00	2.3	17.0	34.00	63.48	63.48	127	Bare
			BL No.6-3	4	2.3	9.45	2.3	16.0	64.00	49.99	49.99	200	Bare
			BL No.6-4	2	2.3	12.00	1.85	14.5	29.00	51.06	51.06	102	Bare
			BL No.7-1	4	2.3	9.45	1.85	14.0	56.00	40.21	40.21	161	Bare
			BL No.7-2	2	2.3	12.00	2.3	16.5	33.00	63.48	63.48	127	Bare
			BL No.7-3	4	2.3	9.45	2.3	16.0	64.00	49.99	49.99	200	Bare
			BL No.7-4	2	2.3	12.00	1.85	14.0	28.00	51.06	51.06	102	Bare
			BL No.8-1	4	2.3	9.45	1.85	14.0	56.00	40.21	40.21	161	Bare
			BL No.8-2	2	2.3	12.00	2.3	16.5	33.00	63.48	63.48	127	Bare
			BL No.8-3	4	2.3	9.45	2.3	16.0	64.00	49.99	49.99	200	Bare
			BL No.8-4	2	2.3	12.00	1.85	14.0	28.00	51.06	51.06	102	Bare
			BL No.9-1	4	2.3	9.45	1.85	14.0	56.00	40.21	40.21	161	Bare
			BL No.9-2	2	2.3	12.00	2.3	16.0	32.00	63.48	63.48	127	Bare
			BL No.9-3	4	2.3	9.45	2.3	15.5	62.00	49.99	49.99	200	Bare
			BL No.9-4	2	2.3	12.00	1.85	14.0	28.00	51.06	51.06	102	Bare
			BL No.10-1	4	2.3	9.45	1.85	14.0	56.00	40.21	40.21	161	Bare
			BL No.10-2	2	2.3	12.00	2.3	16.0	32.00	63.48	63.48	127	Bare
			BL No.10-3	4	2.3	9.45	2.3	15.5	62.00	49.99	49.99	200	Bare
			BL No.10-4	2	2.3	12.00	1.85	13.5	27.00	51.06	51.06	102	Bare
			BL No.11-1	4	2.3	9.45	1.85	13.5	54.00	40.21	40.21	161	Bare
			BL No.11-2	2	2.3	12.00	2.3	15.5	31.00	63.48	63.48	127	Bare
			BL No.11-3	4	2.3	9.45	2.3	15.0	60.00	49.99	49.99	200	Bare
			BL No.11-4	2	2.3	12.00	1.85	13.5	27.00	51.06	51.06	102	Bare
			BL No.12-1	4	2.4	9.45	1.85	13.0	52.00	41.96	41.96	168	Bare
			BL No.12-2	2	2.4	12.00	2.3	15.0	30.00	66.24	66.24	132	Bare
			BL No.12-3	4	2.4	9.45	2.3	14.5	58.00	52.16	52.16	209	Bare
			BL No.12-4	2	2.4	12.00	1.85	13.0	26.00	53.28	53.28	107	Bare
			BL No.13-1	4	2.4	9.45	1.85	12.5	50.00	41.96	41.96	168	Bare
			BL No.13-2	2	2.4	12.00	2.3	14.0	28.00	66.24	66.24	132	Bare
			BL No.13-3	4	2.4	9.45	2.3	13.5	54.00	52.16	52.16	209	Bare
			BL No.13-4	2	2.4	12.00	1.85	12.0	24.00	53.28	53.28	107	Bare
			BL No.14-1	4	2.4	9.45	1.85	12.0	48.00	41.96	41.96	168	Bare
			BL No.14-2	2	2.4	12.00	2.3	13.0	26.00	66.24	66.24	132	Bare
			BL No.14-3	4	2.4	9.45	2.3	13.0	52.00	52.16	52.16	209	Bare
			BL No.14-4	2	2.5	12.00	1.85	11.5	23.00	55.50	55.50	111	Bare
			BL No.15-1	4	2.5	9.45	1.85	12.0	48.00	43.71	43.71	175	Bare
			BL No.15-2	2	2.5	12.00	2.3	13.0	26.00	69.00	69.00	138	Bare
			BL No.15-3	4	2.5	9.45	2.3	13.0	52.00	54.34	54.34	217	Bare
			BL No.15-4	2	2.5	12.00	1.85	11.0	22.00	55.50	55.50	111	Bare
			BL No.16-1	4	2.5	9.45	1.85	12.5	50.00	43.71	43.71	175	Bare
			BL No.16-2	2	2.5	12.00	2.3	14.0	28.00	69.00	69.00	138	Bare
			BL No.16-3	4	2.5	9.45	2.3	14.0	56.00	54.34	54.34	217	Bare
			BL No.16-4	2	2.5	12.00	1.85	12.5	25.00	55.50	55.50	111	Bare
			BL No.17-1	4	2.5	9.45	1.85	12.5	50.00	43.71	43.71	175	Bare
			BL No.17-2	2	2.5	12.00	2.3	14.0	28.00	69.00	69.00	138	Bare
			BL No.17-3	4	2.5	9.45	2.3	14.0	56.00	54.34	54.34	217	Bare
			BL No.17-4	2	2.5	12.00	1.85	12.5	25.00	55.50	55.50	111	Bare
			BL No.18-1	4	2.5	9.45	1.85	12.5	50.00	43.71	43.71	175	Bare
			BL No.18-2	2	2.5	12.00	2.3	14.0	28.00	69.00	69.00	138	Bare
			BL No.18-3	4	2.5	9.45	2.3	14.0	56.00	54.34	54.34	217	Bare
			BL No.18-4	2	2.5	12.00	1.85	12.5	25.00	55.50	55.50	111	Bare
		Gate Body total		200					2,987			9,980	
		Pintel		12	1.40	2.00	5.00	15	180.00	14.00	15.00	180	Dare
		Hoist Anchorage		6	1.40	2.00	5.00	8	48.00	14.00	14.00	84	Bare
	Sub Total			218					3,215			10,244	
2	Embedded Frame												
		Sill Frame		6	0.25	12.00	0.25	2.43	14.57	0.75	2.43	15	Bare
		Side Frame		6	0.25	12.00	0.25	1.21	7.29	0.75	1.21	7	Bare
				12					21.86			22	
1Set(1門分) Total				230					3,237			10,265	

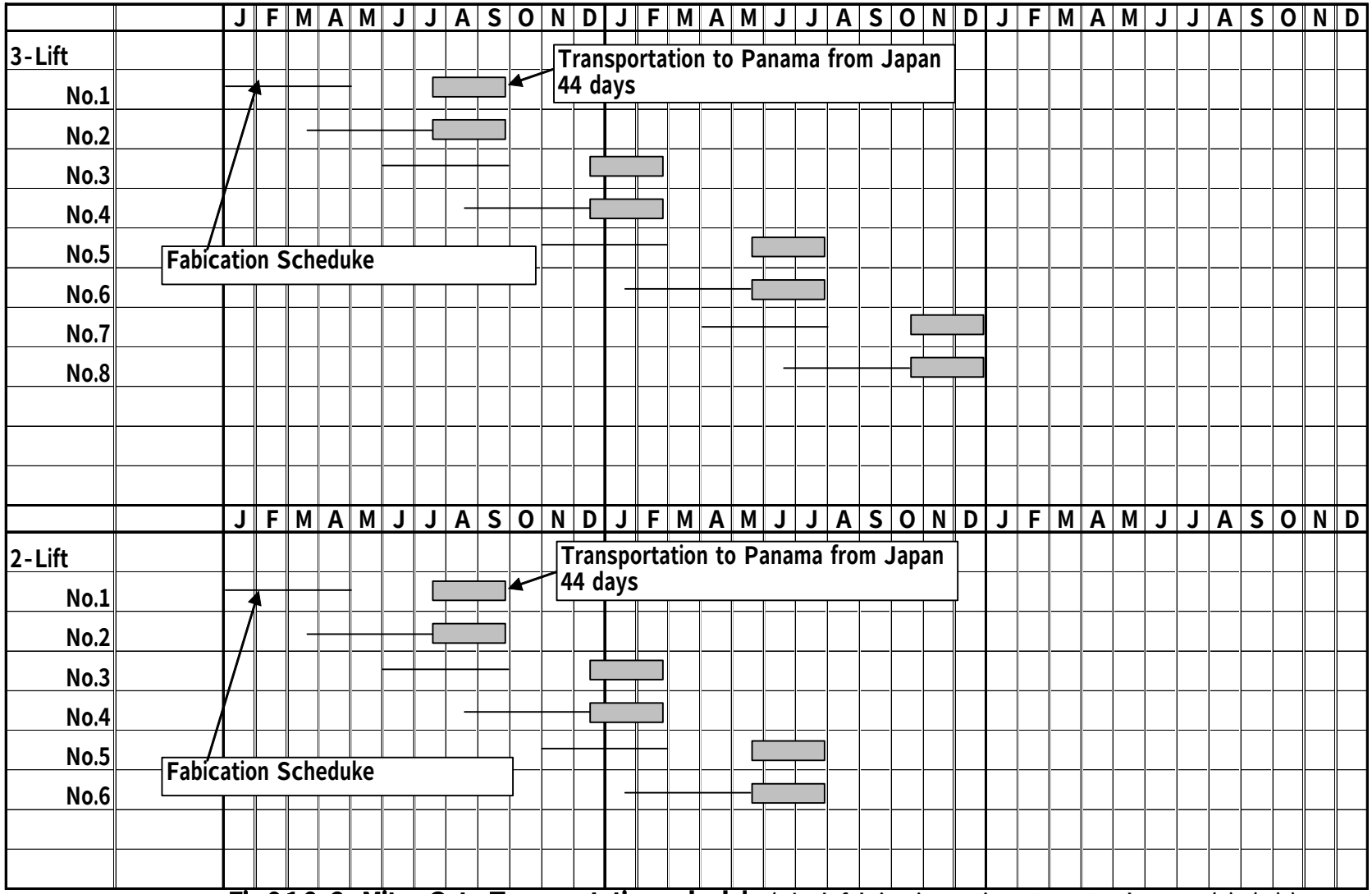

Fig.6.1.2-3 Miter Gate Transportation schedule (Block fabrication, Miter Gate, Study Case (II)&(III))

6.2 Rolling Gate

6.2.1 One-unit Transport

A. Outline of Transportation Procedure

We have studied one-unit transport assuming that large blocks were fabricated in Japanese manufacturing shop. Fig.6.2.1-1 shows the transportation flow in one-unit transport.

Since gate leaves are large blocks, they may be towed to Panama as transportation means. However, they were decided to be transported by loading them on the deck of a transport vessel as the basic requirement by taking into consideration the avoidance of the damage to the gate leaves during transportation, protection of painting film, and other quality assurance.

B. Plan for Temporary Facilities

(a) Loading with a Huge Floating Crane

A floating crane is used for lifting a large block weighing 4,500 tons.

The rolling gate leaf weight becomes within a range of 1,900 tons to 4,500 tons when taking both cases of 2-Lift and 3-Lift types into account. Accordingly, the floating crane to be used was presumed to have a hoisting capacity of 2,200tons for gate leaves under 22,000tons. And two floating cranes to be used were presumed to have a hoisting capacity of 3,600tons for gate leaves over 2,200tons.

For loading using a floating crane, the floating crane moves backward from the pier after hoisting up the gate leaf, the transport ship is introduced between the pier and the floating crane, and then, the gate leaf is lowered onto the transport ship. For this loading method, refer to the transportation flow in Fig.6.2.1-1. Since the working range of the floating crane hook depends upon the weight of the hoisting load, the distance from the pier to the center of gravity of the gate leaf must be fully reviewed before deciding the yard assembly place. Fig.6.1.1-2 shows the data on a 2,200-ton class floating crane, while Fig.6.2.1-2 shows the data on a 3,600-ton class floating crane.

(b) Ocean Transportation

Since no floating crane is available for unloading in Panama, a semi-submersible vessel is used so as to float cargoes on the surface of the sea by submersing the vessel. For the unloading method by a semi-submersible vessel, the gate leaf is let float on the sea surface when the vessel is semi- submerged, and then, the floating gate leaf is towed by tug-

boats or the like. Refer to the transportation flow diagram in Fig 6.2.1-1. Fig.6.1.1-3 shows the reference data on the semi-submersible vessel.
The vessel in these data is named SWAN which was selected assuming that two Miter Gates are transported at a time.

(c) Draft

When transporting the gate leaf by a semi-submersible vessel, the drafts of both gate leaf and semi-submersible vessel become very important for judging whether the transportation is possible or not.
Because the unloading is impossible if the distance from the deck face of the vessel to the sea surface is less than the gate leaf draft when the semi-submersible vessel submerges to the maximum extent.
The distance from the deck face of the vessel to the sea surface when the semi-submersible vessel SWAN submerges to the maximum extent can be calculated as follows:

SWAN Depth 13.30m
Draft submerged 20.60m
Deck face draft under the submersed condition
= 20.60 - 13.30 = 7.3m

Table 6.2.1-1 shows the draft of each Rolling Gate type.

Table 6.2.1-1 Drafts of Rolling Gates

No.	2-Lift	3-Lift	Height of gate	Draft of Rolling Gates
R-D3	2		36.50m	15.4m
R-D2	2		35.49m	16.0m
R-T4		2	31.70m	17.1m
R-T2/T3		4	30.50m	16.3m
R-D1	2		22.70m	14.3m
R-T1		2	22.70m	13.9m

As for the draft of Rolling Gates, refer to Fig.6.2.1-3.
Assuming that the rolling gates are transported under the erected condition, the rolling gates cannot be transported by the semi- submerge vessel as is understood from the draft values.
The rolling gates cannot be transported even if Mighty Servant 3 having a larger draft is used.
One-unit transport of the rolling gate becomes executable when taking the following remedial measures. However, an extensive design and structure change becomes necessary in any case.

1) Lower the draft by mounting an auxiliary float
2) Modify the structure of the gate leaf of Rolling Gate to be erected/rolled by adjusting the ballast in the same way as in the Miter Gate. (Transport the gate leaf by laying it down horizontally.)
3) Lower the draft by reducing the entire weight by use of high strength steel.
4) Combine the above modification plans with each other.

(d) Details of Shipping Method

We have studied the detail of shipping method assuming that the draft problem of the Rolling Gate has been solved and the Rolling Gate is transported under the vertically erected condition. However, the expenses shown in Chapter 8 don't include any expenses required for solving the draft problem. Two gates are assumed to be transported at a time by taking the fabrication schedule and construction schedule on site, securing of a temporary storage yard of blocks and other circumstances into consideration, to say nothing of the efficiency of transportation in the same way as in the Miter Gate. In case of 3-Lift, for example, eight gate leaves are transported by four vessels separately. In case of 2-Lift, six gate leaves are transported by three vessels separately.

Table 6.2.1-2 shows the details of shipping method, and Fig.6.2.1-3 to Fig.6.2.1-9 show the stowage proposal for transportation.

Table 6.2.1-2 Details of Shipping Method for Rolling Gate

	Shipping Method	Cargo to be Shipped	Ship's Name	Drawing No.
3-Lift	Split Four Shipment (To Balboa)	1st Ship with (2×R-T1)	Swan	Fig.6.2.1-4
		2nd Ship with (2×R-T2)	Swan	Fig.6.2.1-5
		3rd Ship with (2×R-T3/T4)	Swan	Fig.6.2.1-6
		4th Ship with (2×R-T3/T4)	Swan	Fig.6.2.1-7
2-Lift	Split Three Shipment (To Balboa)	1st Ship with (2×R-T1)	Swan	Fig.6.2.1-8
		2nd Ship with (2×R-T2)	M. Servant 3	Fig.6.2.1-9
		3rd Ship with (2×R-T3/T4)	M. Servant 3	Fig.6.2.1-10

C. Transportation Schedule

Fig.6.2.1-11 shows a transportation schedule plan under the above conditions.

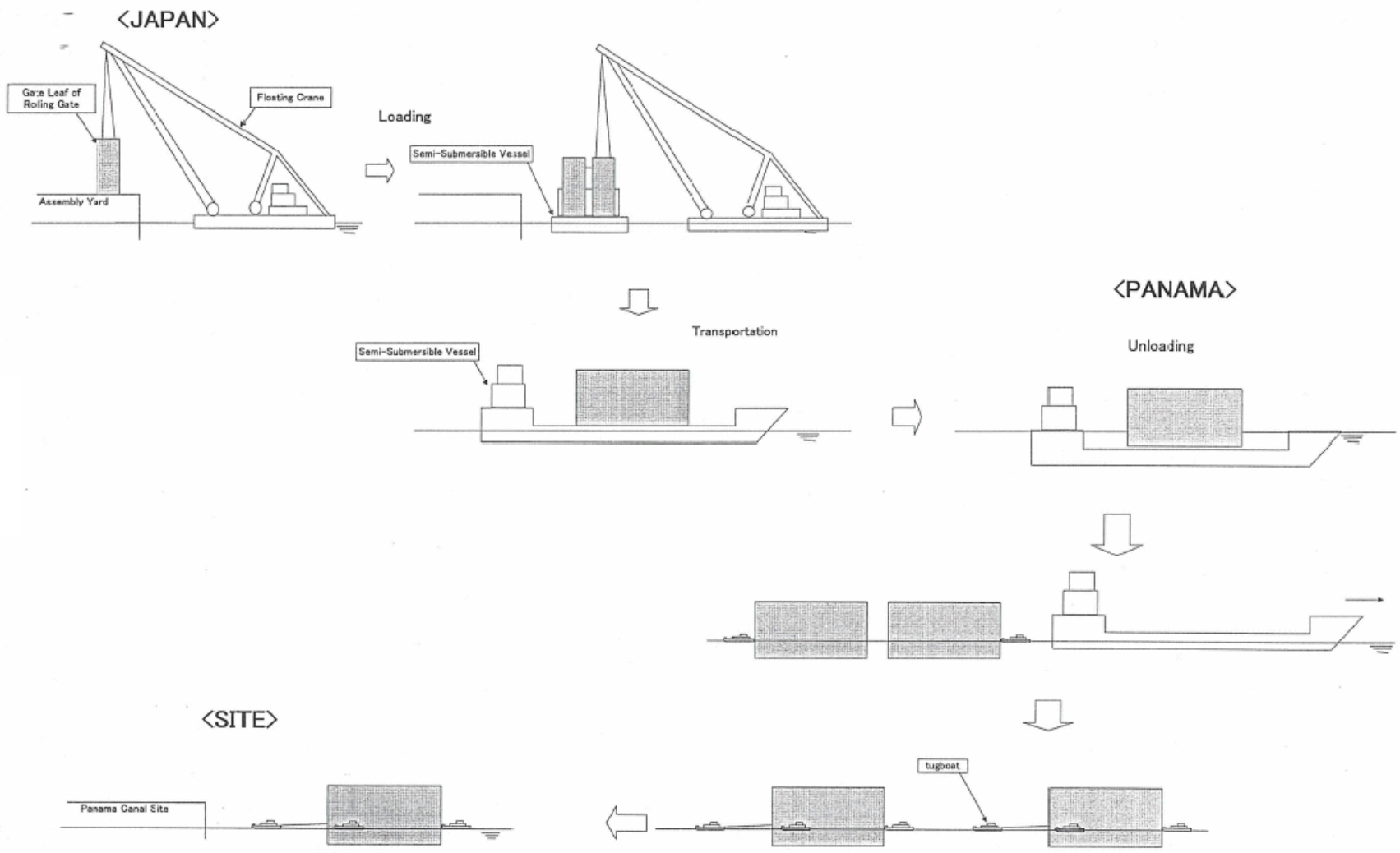

Fig.6.2.1-1 The transportation flow of Rolling Gate in one-unit transport

MUSASHI

HULL SECTION

Length:	107.0m
Width:	49.0m
Depth:	8.0m

LOAD LIFTING CONDITIONS

	condition		1	2	3	4	5
Jib angle		deg	66	63.5	55	45	35
Lifting load		ton	3,600	3,600	2,000	1,060	420
Outreach	Fore hook	m	25.5	30.8	47.6	64.3	78.5
	Aft hook	m	33.1	38.5	55.8	72.7	87.0
Lifting height	Fore hook	m	102.0	100.0	91.0	79.0	64.0
	Aft hook	m	108.0	106.0	96.0	82.0	66.0

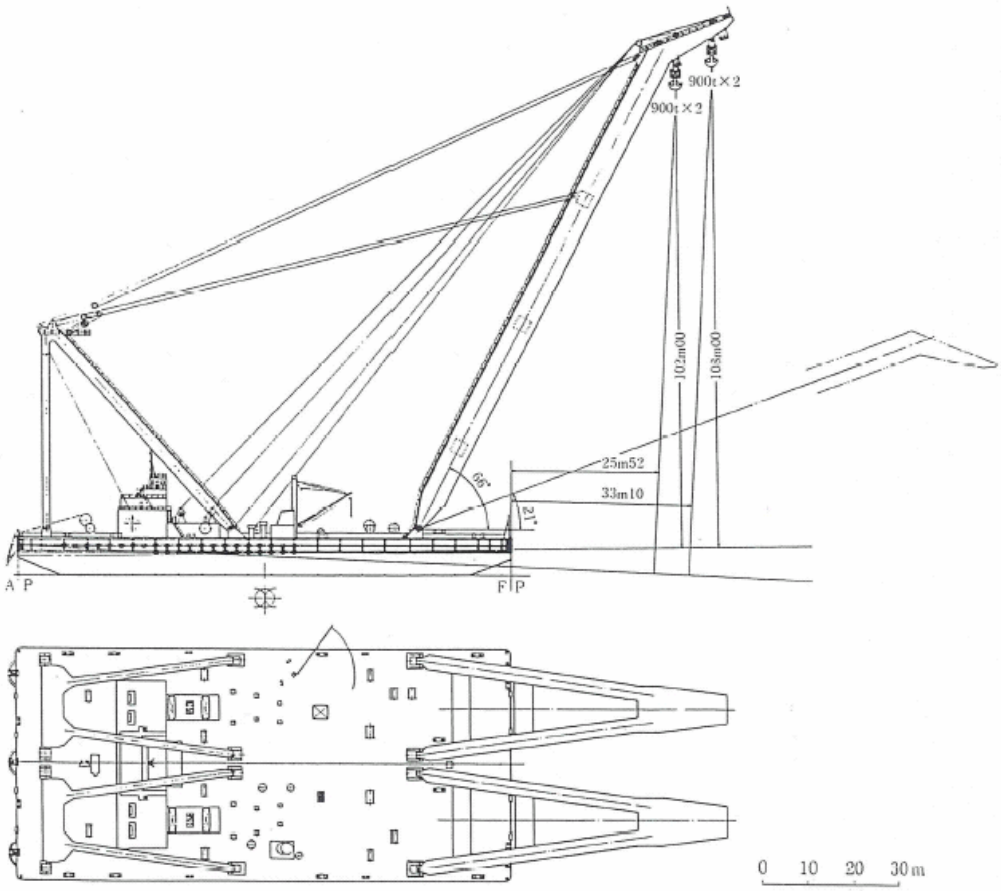

Fig.6.2.1-2 Floating Crane MUSASHI(武蔵) (3,600 Tons class)

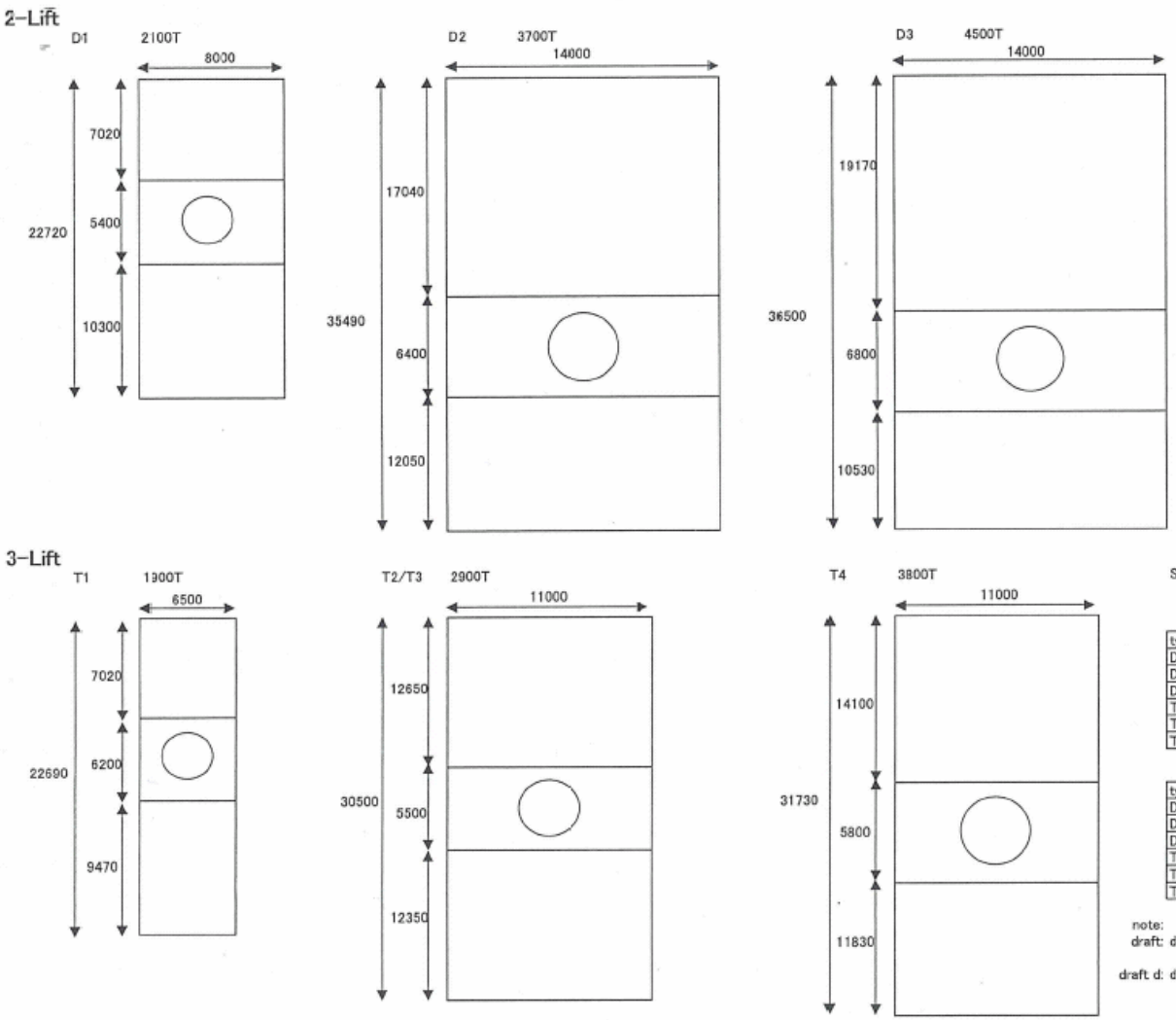

Stability Calculation

spcific weight of sea water: 1.025

type	weight	L	W	draft	draft d
D1	2100	64.5	8	14.3	4.0
D2	3700	64.5	14	16.0	4.0
D3	4500	64.5	14	15.4	4.9
T1	1900	64.5	6.5	13.9	4.4
T2/~3	2900	64.5	11	16.3	4.0
T4	3800	64.5	11	17.1	5.2

type	W	draft d	BM	GM
D1	8	4.0	1.343238	2.268491
D2	14	4.0	4.085872	0.389629
D3	14	4.9	3.359494	-1.92958
T1	6.5	4.4	0.796322	1.132006
T2/~3	11	4.0	2.528613	1.62246
T4	11	5.2	1.929731	0.507358

note:
draft: distance from the bottom of the gate to sea level

draft d: distance from the bottom of the air chamber to sea level

Fig.6.2.1-3 Drafts of Rolling Gates

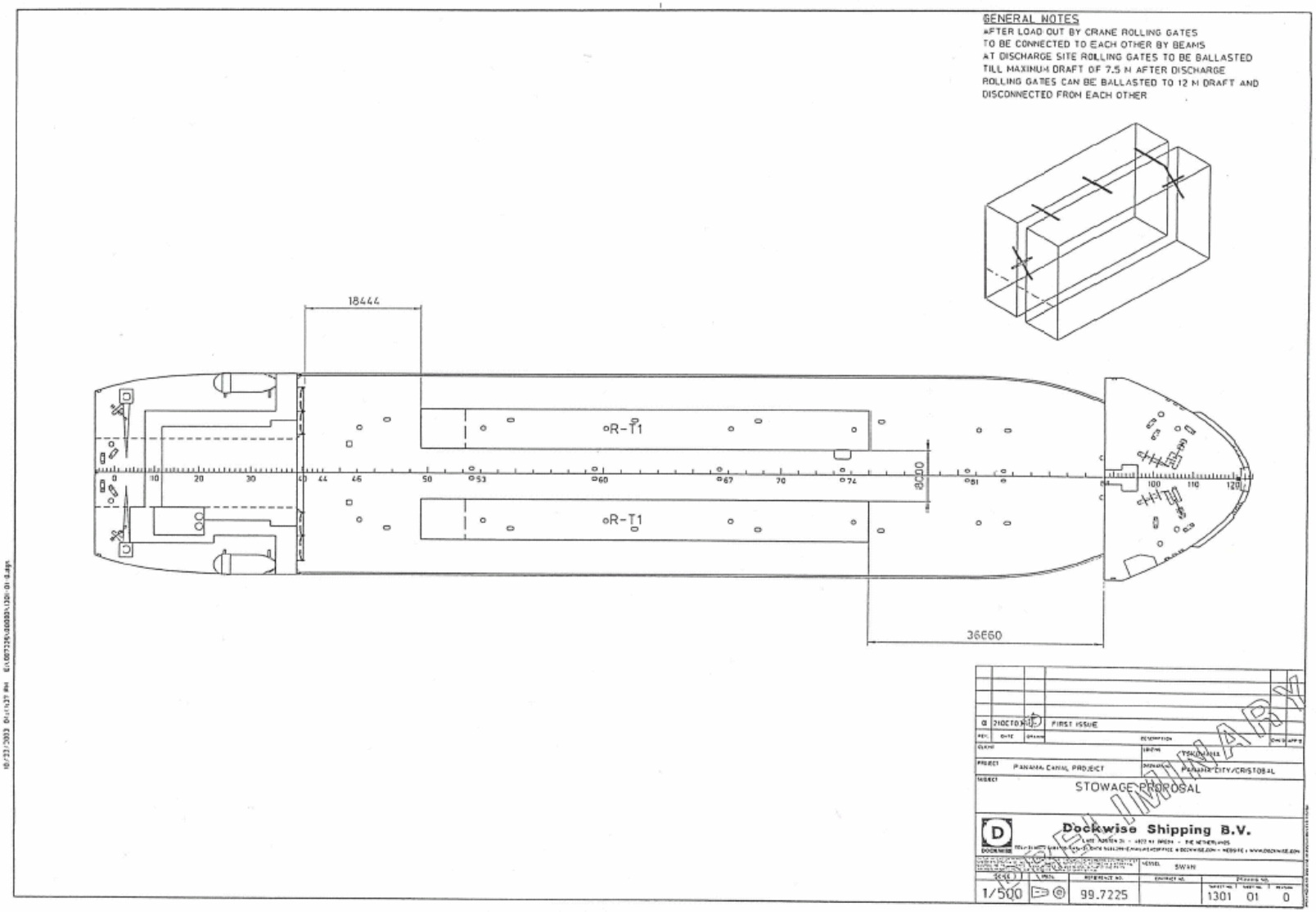

Fig.6.2.1-4 Stowage Proposal of 3-Lift Rolling gate for One-unit Transportation, 1st Ship

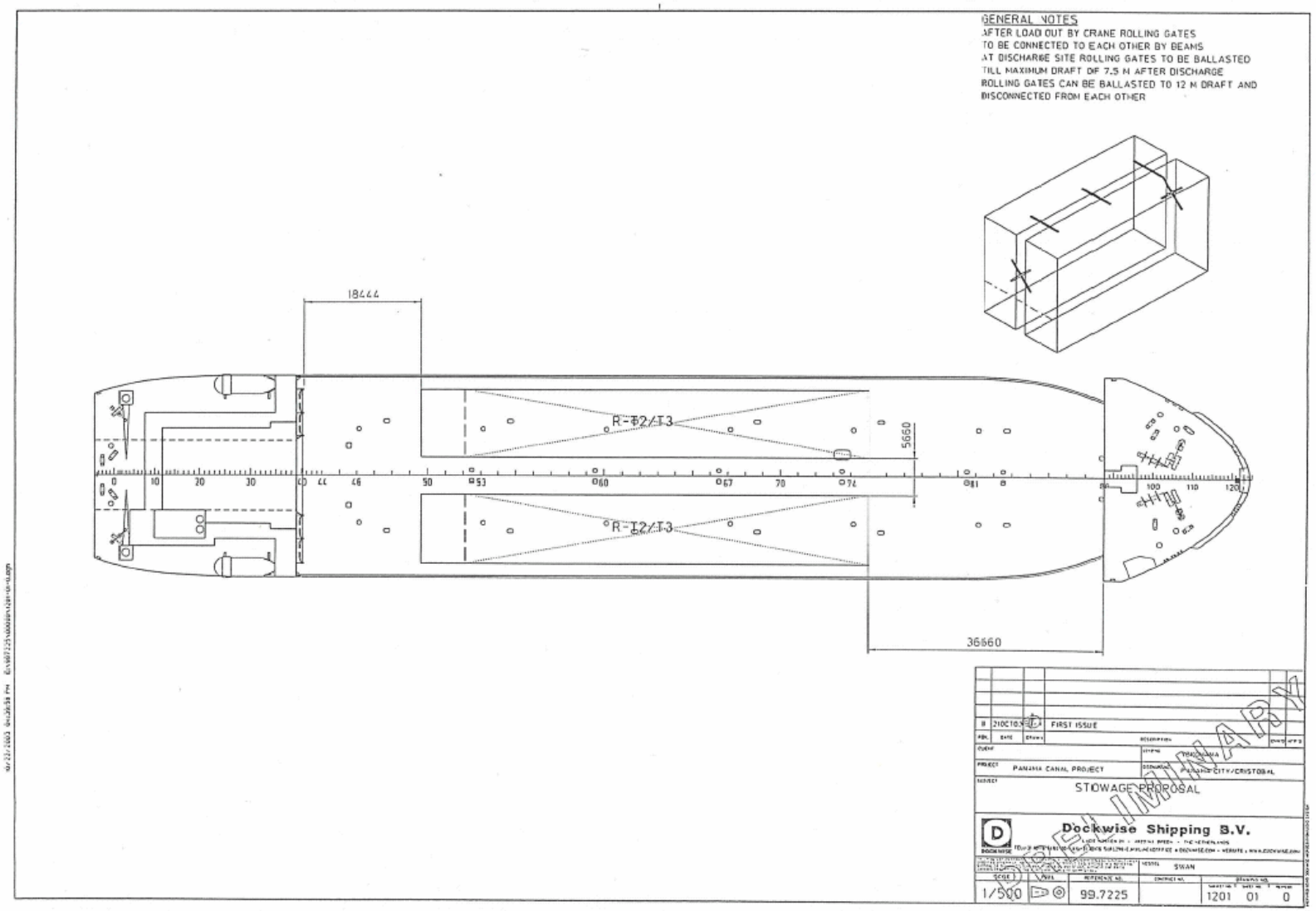

Fig.6.2.1-5 Stowage Proposal of 3-Lift Rolling gate for One-unit Transportation, 2nd Ship

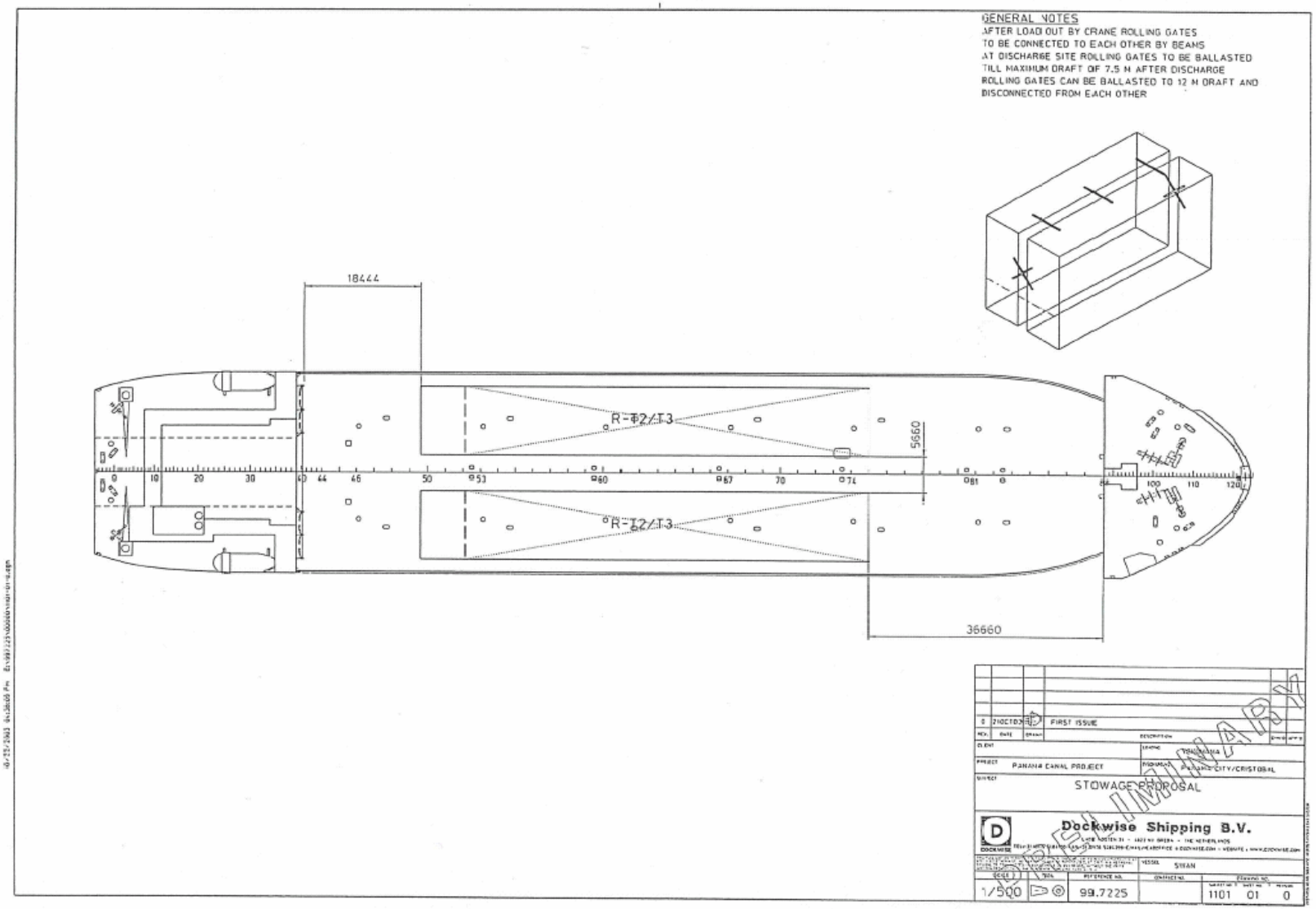

Fig.6.2.1-6 Stowage Proposal of 3-Lift Rolling gate for One-unit Transportation, 3rd Ship

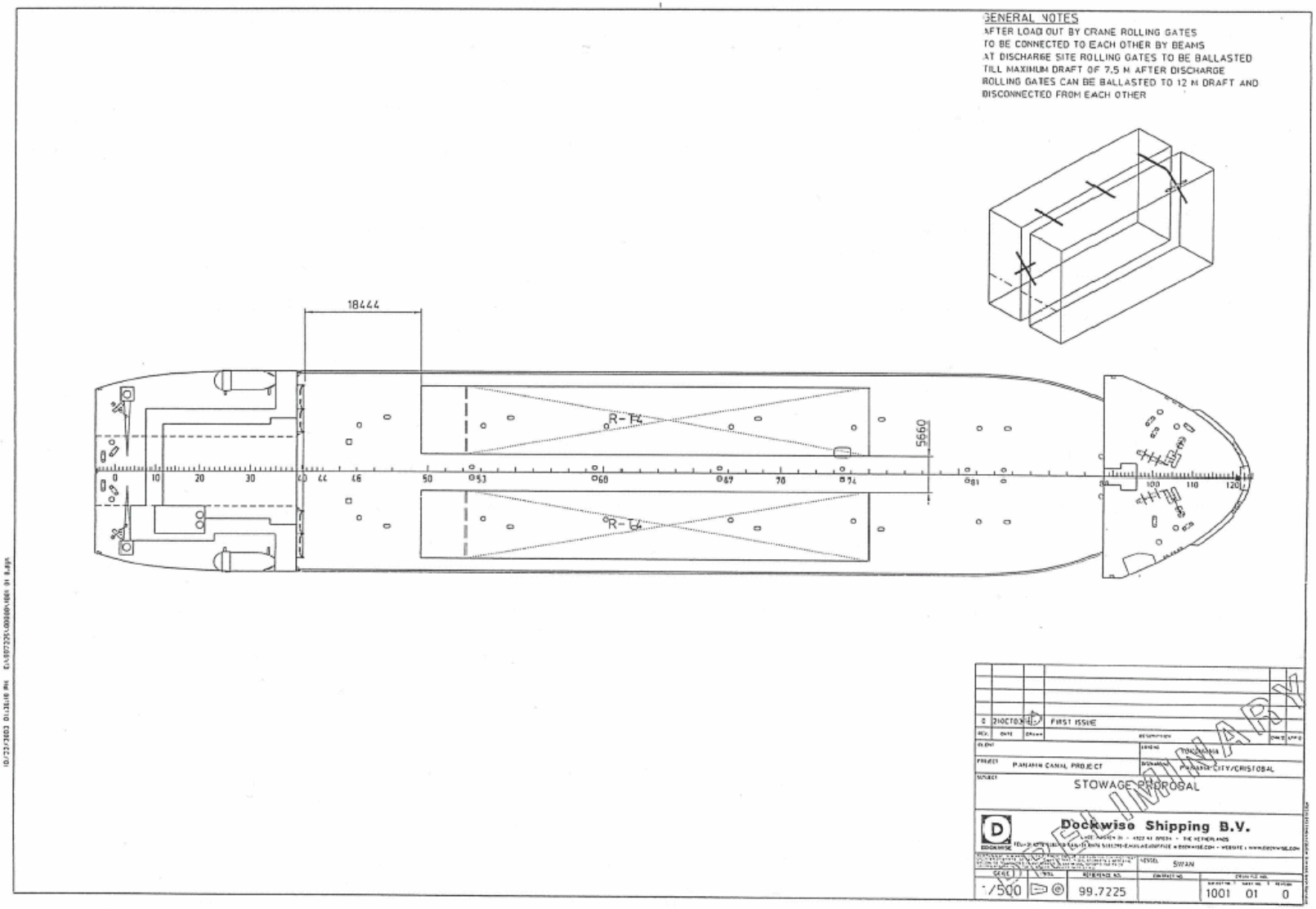

Fig.6.2.1-7 Stowage Proposal of 3-Lift Rolling gate for One-unit Transportation, 4th Ship

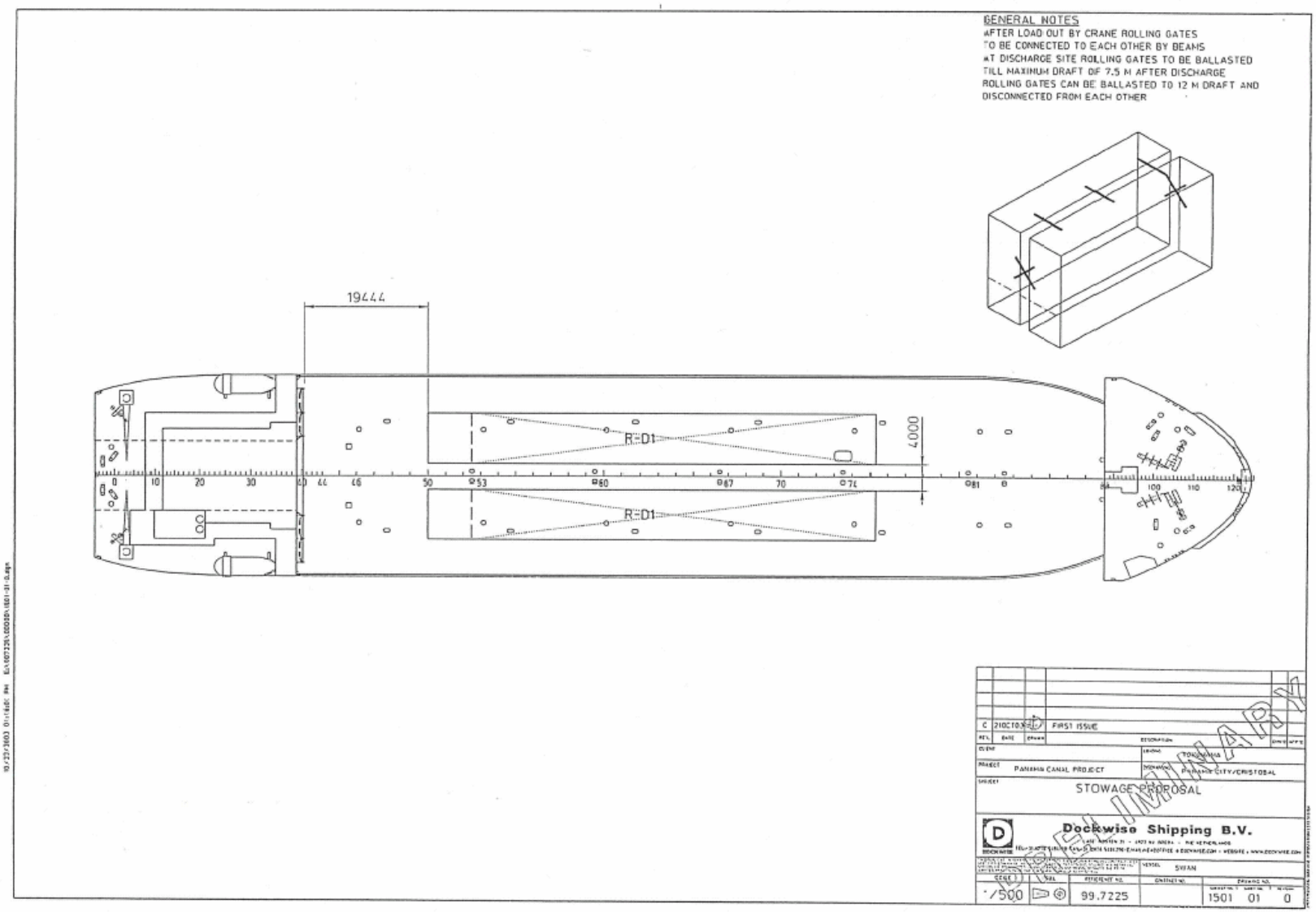

Fig.6.2.1-8 Stowage Proposal of 2-Lift Rolling gate for One-unit Transportation, 1st Ship

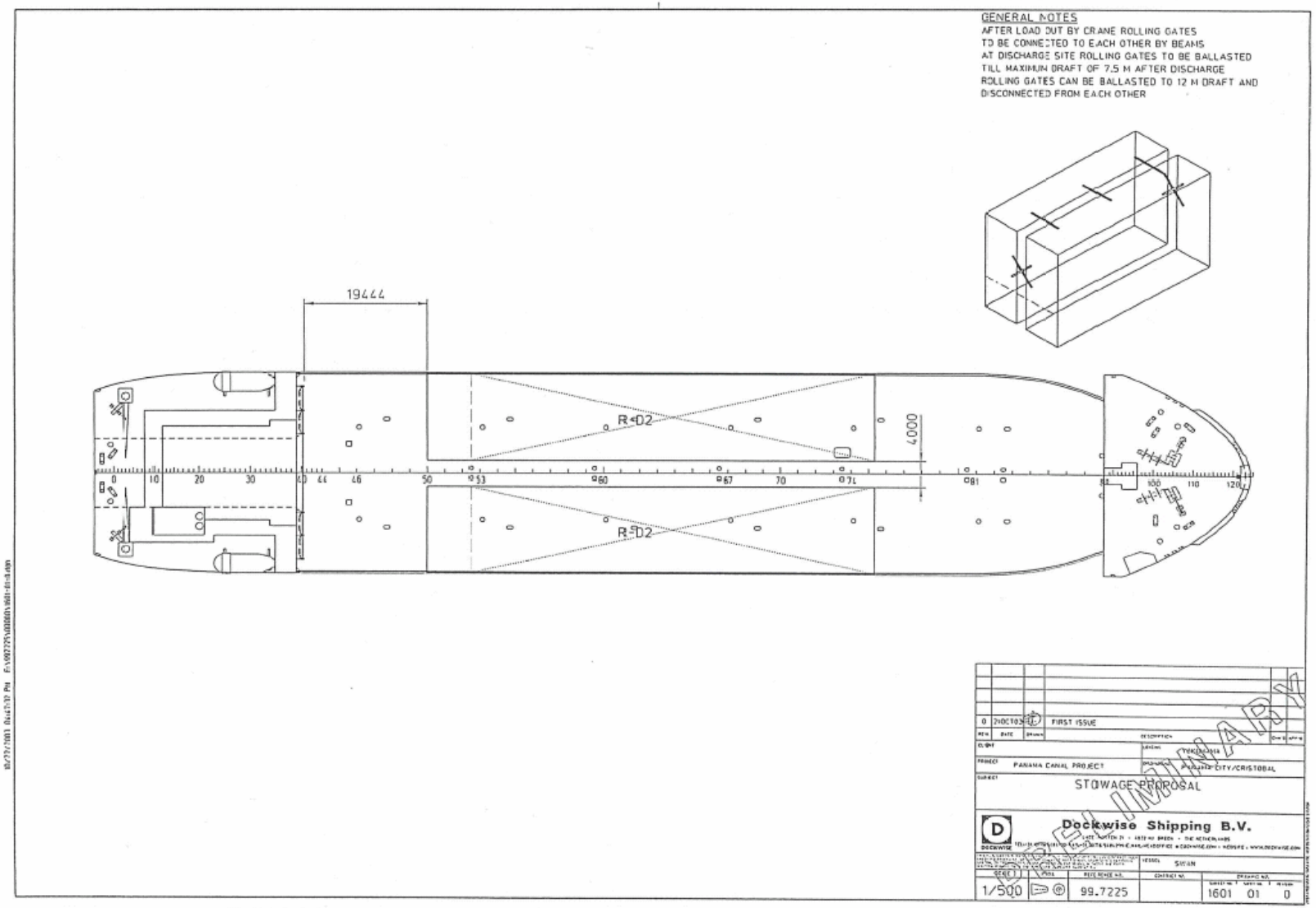

Fig.6.2.1-9 Stowage Proposal of 2-Lift Rolling gate for One-unit Transportation, 2nd Ship

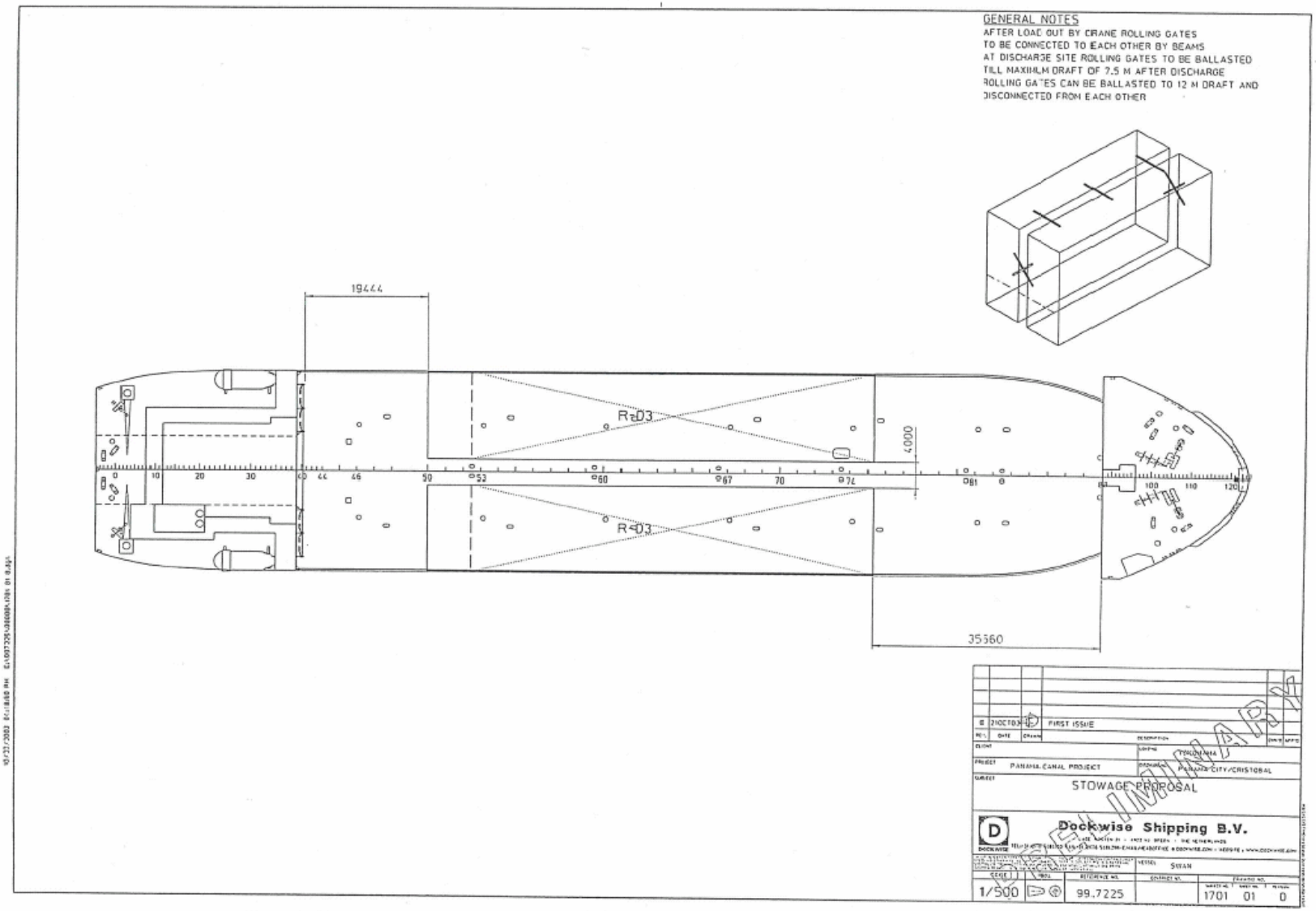

Fig.6.2.1-10 Stowage Proposal of 2-Lift Rolling gate for One-unit Transportation, 3rd Ship

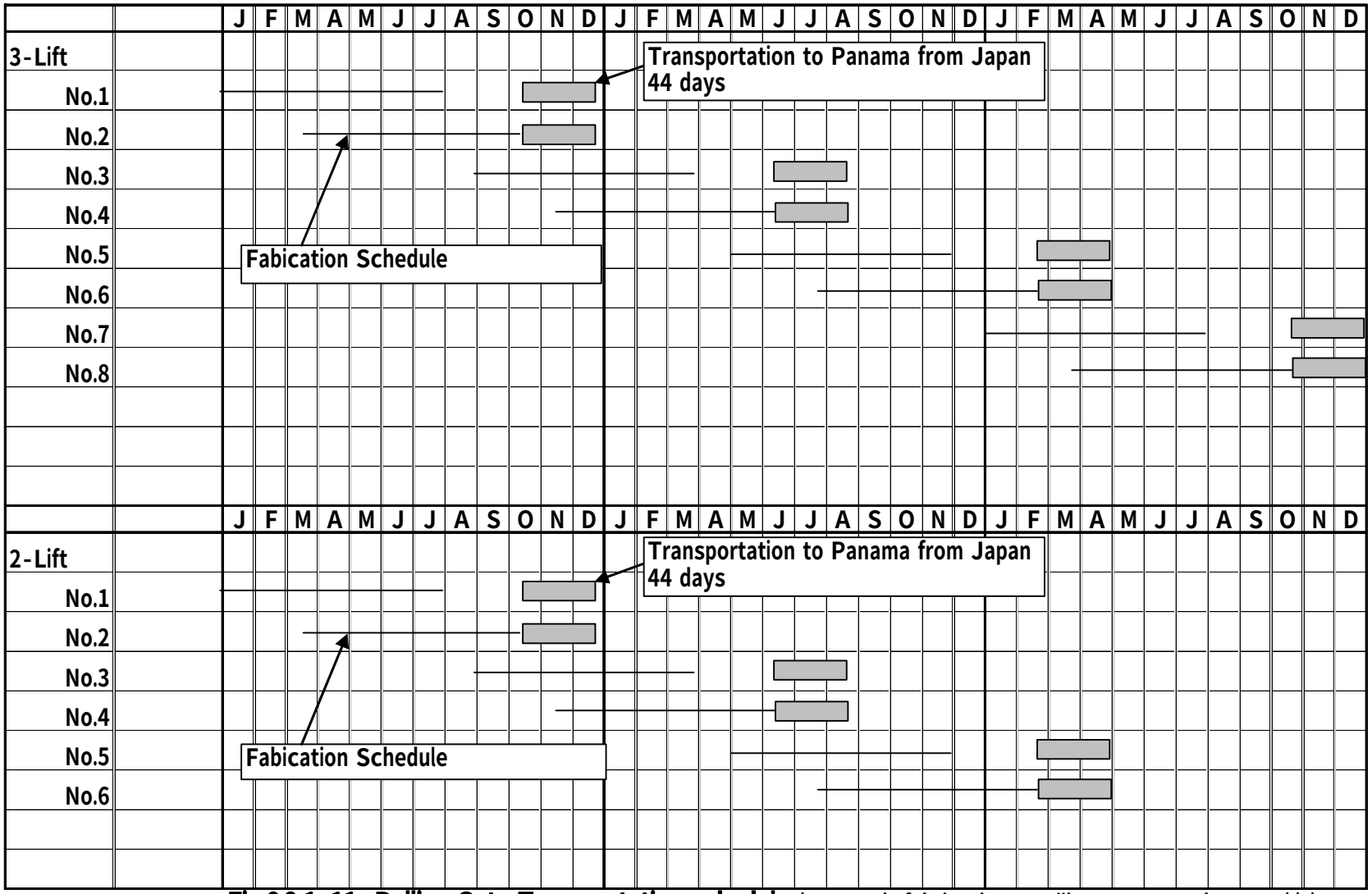

Fig.6.2.1-11 Rolling Gate Transportation schedule (One-unit fabrication, Rolling Gate, Study case (I))

6.2.2 Block Transport

A. Outline of Transportation Procedure

We have studied the block transport assuming that blocks were fabricated in Japanese manufacturing shop. Fig.6.2.2-1 shows the transportation flow in case of block fabrication.

B. Plan for Temporary Facilities

(a) Loading

On the assumption that the shop is equipped with a pier, the export declaration is done at the pier and the blocks are carried to a vessel by means of a barge.

(b) Ocean Transportation

Vessels fitted with cranes are used by taking the loading and unloading efficiency into account. Fig.6.1.2-2 shows the reference data of the vessel with deck cranes as an example.

(c) Study Cases

In case of the block transport, two gates are assumed to be transported at a time in the same way as in one-unit transport. Assuming that the transportation quantity is proportional to the freight tonnage in case of block transport, we studied the transport of one gate leaf having the maximum size out of 2-Lift and 3-Lift gate leaves.

Table 6.2.2-1 shows the studied transportation volume.

Table 6.2.2-1 Rolling Gate Packing List for Block Unit Transport

Numbers of pieces	Total Weight (ton)	Total Volume (m^3)
707	4730	13955

For the detail packing list in block transport, refer to Fig.6.2.2-2.

Since the degree of freedom of the transport frequency and transportation quantity is large as compared with one unit transport, the optimum transportation case must be fully reviewed at the actual execution time. Because of many members, how to reduce the transport frequency becomes an important factor for reducing the transportation expenses. Since the storage place including temporary storage yards costs much, the time schedule for fabrication, transportation and construction must be programmed minutely in advance.

C. Transportation Schedule

Fig.6.2.2-2 shows a transportation schedule plan under the above conditions.

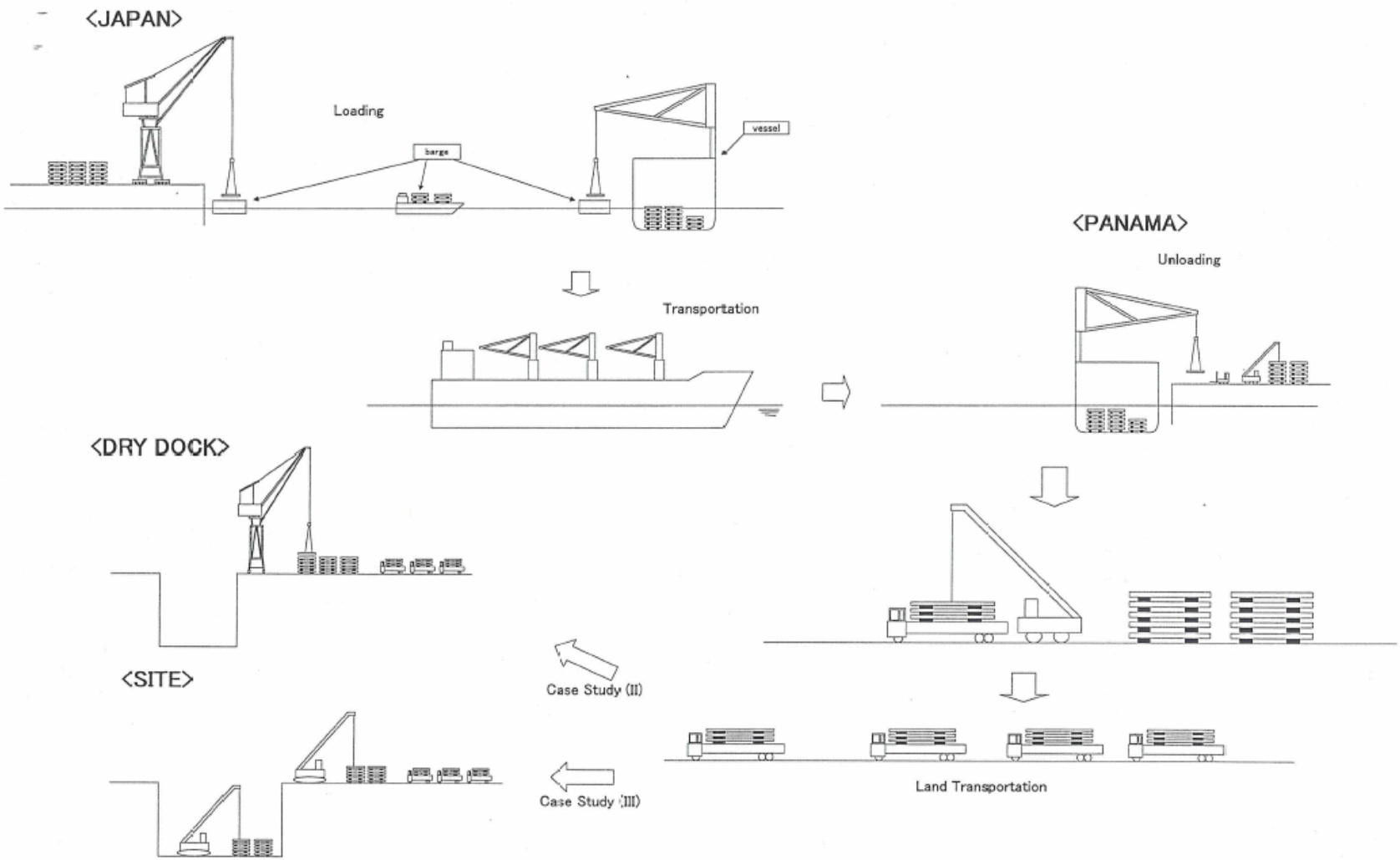

Fig.6.2.2-1 The transportation flow of Rolling Gate in block transport

Table 6.2.2-2 Packing List for Block transportation, Rolling Gate, 2-Lift

1/2

Item	No.	Item Name		Quantities	Size (m) Width	Length	Height	UNIT Weight (ton)	Total Weight (ton)	Volume (m3)	F/L (ton or m3)	Estimated Quantities	Package Style
Rolling Gate D3(Doble Skin)Type			Cleare Span		61.00 m			Gate Height 34.98 m					
1	Gate Leaf												
		Gate Body	BL No.1-1	2	2.5	10.00	2.0	20.00	40.0	50.00	50.00	100	Bare
			BL No.1-2	2	2.5	10.00	2.0	20.00	40.0	50.00	50.00	100	Bare
			BL No.1-3	2	2.5	3.00	2.0	15.00	30.0	15.00	15.00	30	Bare
			BL No.1-4	2	2.5	3.00	2.0	15.00	30.0	15.00	15.00	30	Bare
			BL No.1-5	2	2.5	3.00	2.0	15.00	30.0	15.00	15.00	30	Bare
			BL No.1-6	2	2.5	3.00	2.0	15.00	30.0	15.00	15.00	30	Bare
			BL No.1-7	2	2.5	10.00	2.0	10.00	20.0	50.00	50.00	100	Bare
			BL No.1-8	2	2.5	10.00	2.0	10.00	20.0	50.00	50.00	100	Bare
			BL No.1-9	2	2.5	10.00	2.0	10.00	20.0	50.00	50.00	100	Bare
			BL No.1-10	2	2.5	10.00	2.0	10.00	20.0	50.00	50.00	100	Bare
			BL No.2-1	2	2.5	12.00	2.0	15.00	30.0	60.00	60.00	120	Bare
			BL No.2-2	2	2.5	12.00	2.0	15.00	30.0	60.00	60.00	120	Bare
			BL No.2-3	1	2.5	12.00	2.0	15.00	15.0	60.00	60.00	60	Bare
			BL No.2-4	1	2.5	12.00	2.0	15.00	15.0	60.00	60.00	60	Bare
			BL No.2-5	2	2.5	12.00	2.0	15.00	30.0	60.00	60.00	120	Bare
			BL No.2-6	2	2.5	12.00	2.0	15.00	30.0	60.00	60.00	120	Bare
			BL No.3-1	2	2.5	12.00	2.0	15.00	30.0	60.00	60.00	120	Bare
			BL No.3-2	2	2.5	12.00	2.0	15.00	30.0	60.00	60.00	120	Bare
			BL No.3-3	1	2.5	12.00	2.0	15.00	15.0	60.00	60.00	60	Bare
			BL No.3-4	1	2.5	12.00	2.0	15.00	15.0	60.00	60.00	60	Bare
			BL No.3-5	2	2.5	12.00	2.0	15.00	30.0	60.00	60.00	120	Bare
			BL No.3-6	2	2.5	12.00	2.0	15.00	30.0	60.00	60.00	120	Bare
			BL No.4-1	2	2.5	12.00	2.0	15.00	30.0	60.00	60.00	120	Bare
			BL No.4-2	2	2.5	12.00	2.0	15.00	30.0	60.00	60.00	120	Bare
			BL No.4-3	1	2.5	12.00	2.0	15.00	15.0	60.00	60.00	60	Bare
			BL No.4-4	1	2.5	12.00	2.0	15.00	15.0	60.00	60.00	60	Bare
			BL No.4-5	2	2.5	12.00	2.0	15.00	30.0	60.00	60.00	120	Bare
			BL No.4-6	2	2.5	12.00	2.0	15.00	30.0	60.00	60.00	120	Bare
			BL No.5-1	2	2.5	12.00	2.0	15.00	30.0	60.00	60.00	120	Bare
			BL No.5-2	2	2.5	12.00	2.0	15.00	30.0	60.00	60.00	120	Bare
			BL No.5-3	1	2.5	12.00	2.0	15.00	15.0	60.00	60.00	60	Bare
			BL No.5-4	1	2.5	12.00	2.0	15.00	15.0	60.00	60.00	60	Bare
			BL No.5-5	2	2.5	12.00	2.0	15.00	30.0	60.00	60.00	120	Bare
			BL No.5-6	2	2.5	12.00	2.0	15.00	30.0	60.00	60.00	120	Bare
			BL No.6-1	2	1.3	12.00	2.0	24.00	48.0	31.20	31.20	62	Bare
			BL No.6-2	2	1.3	12.00	2.0	24.00	48.0	31.20	31.20	62	Bare
			BL No.6-3	1	1.3	12.00	2.0	24.00	24.0	31.20	31.20	31	Bare
			BL No.6-4	1	1.3	12.00	2.0	24.00	24.0	31.20	31.20	31	Bare
			BL No.6-5	2	1.3	12.00	2.0	24.00	48.0	31.20	31.20	62	Bare
			BL No.6-6	2	1.3	12.00	2.0	24.00	48.0	31.20	31.20	62	Bare
			BL No.7-1	2	2.4	12.00	2.0	24.00	48.0	57.60	57.60	115	Bare
			BL No.7-2	2	2.4	12.00	2.0	24.00	48.0	57.60	57.60	115	Bare
			BL No.7-3	1	2.4	12.00	2.0	24.00	24.0	57.60	57.60	58	Bare
			BL No.7-4	1	2.4	12.00	2.0	24.00	24.0	57.60	57.60	58	Bare
			BL No.7-5	2	2.4	12.00	2.0	24.00	48.0	57.60	57.60	115	Bare
			BL No.7-6	2	2.4	12.00	2.0	24.00	48.0	57.60	57.60	115	Bare
			BL No.8-1	2	2.3	12.00	2.0	24.00	48.0	55.20	55.20	110	Bare
			BL No.8-2	2	2.3	12.00	2.0	24.00	48.0	55.20	55.20	110	Bare
			BL No.8-3	1	2.3	12.00	2.0	24.00	24.0	55.20	55.20	55	Bare
			BL No.8-4	1	2.3	12.00	2.0	24.00	24.0	55.20	55.20	55	Bare
			BL No.8-5	2	2.3	12.00	2.0	24.00	48.0	55.20	55.20	110	Bare
			BL No.8-6	2	2.3	12.00	2.0	24.00	48.0	55.20	55.20	110	Bare
			BL No.9-1	2	1.3	12.00	2.0	24.00	48.0	31.20	31.20	62	Bare
			BL No.9-2	2	1.3	12.00	2.0	24.00	48.0	31.20	31.20	62	Bare
			BL No.9-3	1	1.3	12.00	2.0	24.00	24.0	31.20	31.20	31	Bare
			BL No.9-4	1	1.3	12.00	2.0	24.00	24.0	31.20	31.20	31	Bare
			BL No.9-5	2	1.3	12.00	2.0	24.00	48.0	31.20	31.20	62	Bare
			BL No.9-6	2	1.3	12.00	2.0	24.00	48.0	31.20	31.20	62	Bare
			BL No.10-1	2	2.5	12.00	2.0	9.00	18.0	60.00	60.00	120	Bare
			BL No.10-2	2	2.5	12.00	2.0	9.00	18.0	60.00	60.00	120	Bare
			BL No.10-3	1	2.5	12.00	2.0	9.00	9.0	60.00	60.00	60	Bare
			BL No.10-4	1	2.5	12.00	2.0	9.00	9.0	60.00	60.00	60	Bare
			BL No.10-5	2	2.5	12.00	2.0	9.00	18.0	60.00	60.00	120	Bare
			BL No.10-6	2	2.5	12.00	2.0	9.00	18.0	60.00	60.00	120	Bare
			BL No.11-1	2	2.5	12.00	2.0	9.00	18.0	60.00	60.00	120	Bare
			BL No.11-2	2	2.5	12.00	2.0	9.00	18.0	60.00	60.00	120	Bare
			BL No.11-3	1	2.5	12.00	2.0	9.00	9.0	60.00	60.00	60	Bare
			BL No.11-4	1	2.5	12.00	2.0	9.00	9.0	60.00	60.00	60	Bare
			BL No.11-5	2	2.5	12.00	2.0	9.00	18.0	60.00	60.00	120	Bare
			BL No.11-6	2	2.5	12.00	2.0	9.00	18.0	60.00	60.00	120	Bare
			BL No.12-1	2	2.5	12.00	2.0	9.00	18.0	60.00	60.00	120	Bare
			BL No.12-2	2	2.5	12.00	2.0	9.00	18.0	60.00	60.00	120	Bare
			BL No.12-3	1	2.5	12.00	2.0	9.00	9.0	60.00	60.00	60	Bare
			BL No.12-4	1	2.5	12.00	2.0	9.00	9.0	60.00	60.00	60	Bare
			BL No.12-5	2	2.5	12.00	2.0	9.00	18.0	60.00	60.00	120	Bare
			BL No.12-6	2	2.5	12.00	2.0	9.00	18.0	60.00	60.00	120	Bare
			BL No.13-1	2	2.5	12.00	2.0	9.00	18.0	60.00	60.00	120	Bare

Table 6.2.2-2 Packing List for Block transportation, Rolling Gate, 2-Lift

2/2

Item	No.	Item Name		Quantities	Size (m) Width	Length	Height	UNIT Weight (ton)	Total Weight (ton)	Volume (m3)	F/L (ton or m3)	Estimated Quantities	Package Style
Rolling Gate D3(Doble Skin)Type				Cleare Span		61.00 m		Gate Height 34.98 m					
		Gate Body	BL No.13-2	2	2.5	12.00	2.0	9.00	18.0	60.00	60.00	120	Bare
			BL No.13-3	1	2.5	12.00	2.0	9.00	9.0	60.00	60.00	60	Bare
			BL No.13-4	1	2.5	12.00	2.0	9.00	9.0	60.00	60.00	60	Bare
			BL No.13-5	2	2.5	12.00	2.0	9.00	18.0	60.00	60.00	120	Bare
			BL No.13-6	2	2.5	12.00	2.0	9.00	18.0	60.00	60.00	120	Bare
			BL No.14-1	2	2.5	12.00	2.0	9.00	18.0	60.00	60.00	120	Bare
			BL No.14-2	2	2.5	12.00	2.0	9.00	18.0	60.00	60.00	120	Bare
			BL No.14-3	1	2.4	12.00	2.0	9.00	9.0	57.60	57.60	58	Bare
			BL No.14-4	1	2.5	12.00	2.0	9.00	9.0	60.00	60.00	60	Bare
			BL No.14-5	2	2.5	12.00	2.0	9.00	18.0	60.00	60.00	120	Bare
			BL No.14-6	2	2.5	12.00	2.0	9.00	18.0	60.00	60.00	120	Bare
			BL No.15-1	2	2.5	12.00	2.0	9.00	18.0	60.00	60.00	120	Bare
			BL No.15-2	2	2.5	12.00	2.0	9.00	18.0	60.00	60.00	120	Bare
			BL No.15-3	1	2.5	12.00	2.0	9.00	9.0	60.00	60.00	60	Bare
			BL No.15-4	1	2.5	12.00	2.0	9.00	9.0	60.00	60.00	60	Bare
			BL No.15-5	2	2.5	12.00	2.0	9.00	18.0	60.00	60.00	120	Bare
			BL No.15-6	2	2.5	12.00	2.0	9.00	18.0	60.00	60.00	120	Bare
			BL No.16-1	2	2.5	12.00	2.0	9.00	18.0	60.00	60.00	120	Bare
			BL No.16-2	2	2.5	12.00	2.0	9.00	18.0	60.00	60.00	120	Bare
			BL No.16-3	1	2.5	12.00	2.0	9.00	9.0	60.00	60.00	60	Bare
			BL No.16-4	1	2.5	12.00	2.0	9.00	9.0	60.00	60.00	60	Bare
			BL No.16-5	2	2.5	12.00	2.0	9.00	18.0	60.00	60.00	120	Bare
			BL No.16-6	2	2.5	12.00	2.0	9.00	18.0	60.00	60.00	120	Bare
			BL No.17-1	2	2.2	12.00	1.2	9.00	18.0	31.68	31.68	63	Bare
			BL No.17-2	2	2.2	12.00	1.2	9.00	18.0	31.68	31.68	63	Bare
			BL No.17-3	1	2.2	12.00	1.2	9.00	9.0	31.68	31.68	32	Bare
			BL No.17-4	1	2.2	12.00	1.2	9.00	9.0	31.68	31.68	32	Bare
			BL No.17-5	2	2.2	12.00	1.2	9.00	18.0	31.68	31.68	63	Bare
			BL No.17-6	2	2.2	12.00	1.2	9.00	18.0	31.68	31.68	63	Bare
			BL No.18-1	5	2.5	12.00	0.75	9.00	45.0	22.50	22.50	113	Bare
			BL No.18-2	5	2.5	12.00	0.75	9.00	45.0	22.50	22.50	113	Bare
			BL No.18-3	5	2.5	12.00	0.75	9.00	45.0	22.50	22.50	113	Bare
			BL No.18-4	5	2.5	12.00	0.75	9.00	45.0	22.50	22.50	113	Bare
			BL No.19-1	21	0.75	10.00	0.75	3.00	63.0	5.63	5.63	118	Bare
			BL No.20-1	42	0.5	5.50	0.5	1.00	42.0	1.38	1.38	58	Bare
			BL No.21-1	21	0.5	10.00	0.5	2.00	42.0	2.50	2.50	53	Bare
			BL No.22-1	42	0.5	5.50	0.5	1.00	42.0	1.38	1.38	58	Bare
			BL No.23-1	21	2.5	5.00	0.75	7.00	147.0	9.38	9.38	197	Bare
			BL No.23-2	21	2.5	5.00	0.75	7.00	147.0	9.38	9.38	197	Bare
			BL No.23-3	21	2.5	5.00	0.75	7.00	147.0	9.38	9.38	197	Bare
			BL No.23-4	21	2.5	5.00	0.75	7.00	147.0	9.38	9.38	197	Bare
			BL No.24-1	21	2.5	5.00	0.75	7.00	147.0	9.38	9.38	197	Bare
			BL No.24-2	42	0.5	6.00	0.5	1.00	42.0	1.50	1.50	63	Bare
			BL No.25-1	21	0.5	12.00	0.5	2.00	42.0	3.00	3.00	63	Bare
			BL No.26-1	42	0.5	6.50	0.5	1.00	42.0	1.63	1.63	68	Bare
			BL No.26-2	42	0.5	7.00	0.5	1.00	42.0	1.75	1.75	74	Bare
			BL No.27-1	5	2.5	12.00	1.5	14.00	70.0	45.00	45.00	225	Bare
			BL No.27-2	5	2.5	12.00	1.5	14.00	70.0	45.00	45.00	225	Bare
			BL No.27-3	5	2.5	12.00	1.5	14.00	70.0	45.00	45.00	225	Bare
			BL No.27-4	5	2.5	12.00	1.5	14.00	70.0	45.00	45.00	225	Bare
			BL No.28-1	5	2.5	12.00	1.5	14.00	70.0	45.00	45.00	225	Bare
			BL No.28-2	5	2.5	12.00	1.5	14.00	70.0	45.00	45.00	225	Bare
			BL No.28-3	5	2.5	12.00	1.5	14.00	70.0	45.00	45.00	225	Bare
			BL No.28-4	5	2.5	12.00	1.5	14.00	70.0	45.00	45.00	225	Bare
			BL No.29-1	2	2.5	6.00	1.5	9.00	18.0	22.50	22.50	45	Bare
			BL No.29-2	2	2.5	6.00	1.5	9.00	18.0	22.50	22.50	45	Bare
			BL No.30-1	2	2.5	6.00	1.5	9.00	18.0	22.50	22.50	45	Bare
			BL No.30-2	2	2.5	6.00	1.5	9.00	18.0	22.50	22.50	45	Bare
			BL No.31-1	2	2.5	6.00	1.5	9.00	18.0	22.50	22.50	45	Bare
			BL No.31-2	2	2.5	6.00	1.5	9.00	18.0	22.50	22.50	45	Bare
		Gate Body total		630					4500.0			13,445	
		Upper Wagon	BL No.U1-1	2	2.50	7.00	1.80	6.00	12.0	31.50	31.50	63	Bare
			BL No.U1-2	2	2.50	7.00	1.80	7.00	14.0	31.50	31.50	63	Bare
			BL No.U1-3	3	2.50	12.00	1.80	8.00	24.0	54.00	54.00	162	Bare
		Lower Wagon	BL No.L1-1	1	2.50	6.00	1.20	7.00	7.0	18.00	18.00	18	Bare
			BL No.L1-2	2	1.50	9.00	1.20	6.00	12.0	16.20	16.20	32	Bare
			BL No.L1-3	4	2.00	2.00	1.20	2.00	8.0	4.80	4.80	19	Bare
			BL No.L1-4	3	0.50	2.00	1.20	1.00	3.0	1.20	1.20	4	Bare
	Sub Total			647					4,580.0			13,806	
	2	Embedded Frame											
		Sill Guide Frame		12	0.25	11.00	0.25	1.11	13.38	0.69	1.11	13	Bare
		Sill Seal Plate & Rail(Chamber		12	0.80	11.00	0.55	4.88	58.55	4.84	4.88	59	Bare
		Lower Wagon Rail (Gate Slot)		12	0.25	11.00	0.25	1.11	13.38	0.69	1.11	13	Bare
		Side Frame		12	0.25	13.00	0.25	1.32	15.79	0.81	1.32	16	Bare
		Upper Wagon Rail		12	0.25	11.00	0.25	4.04	48.47	0.69	4.04	48	Bare
	Sub Total			60					149.5			150	
1Set Total				707					4,730			4,730	

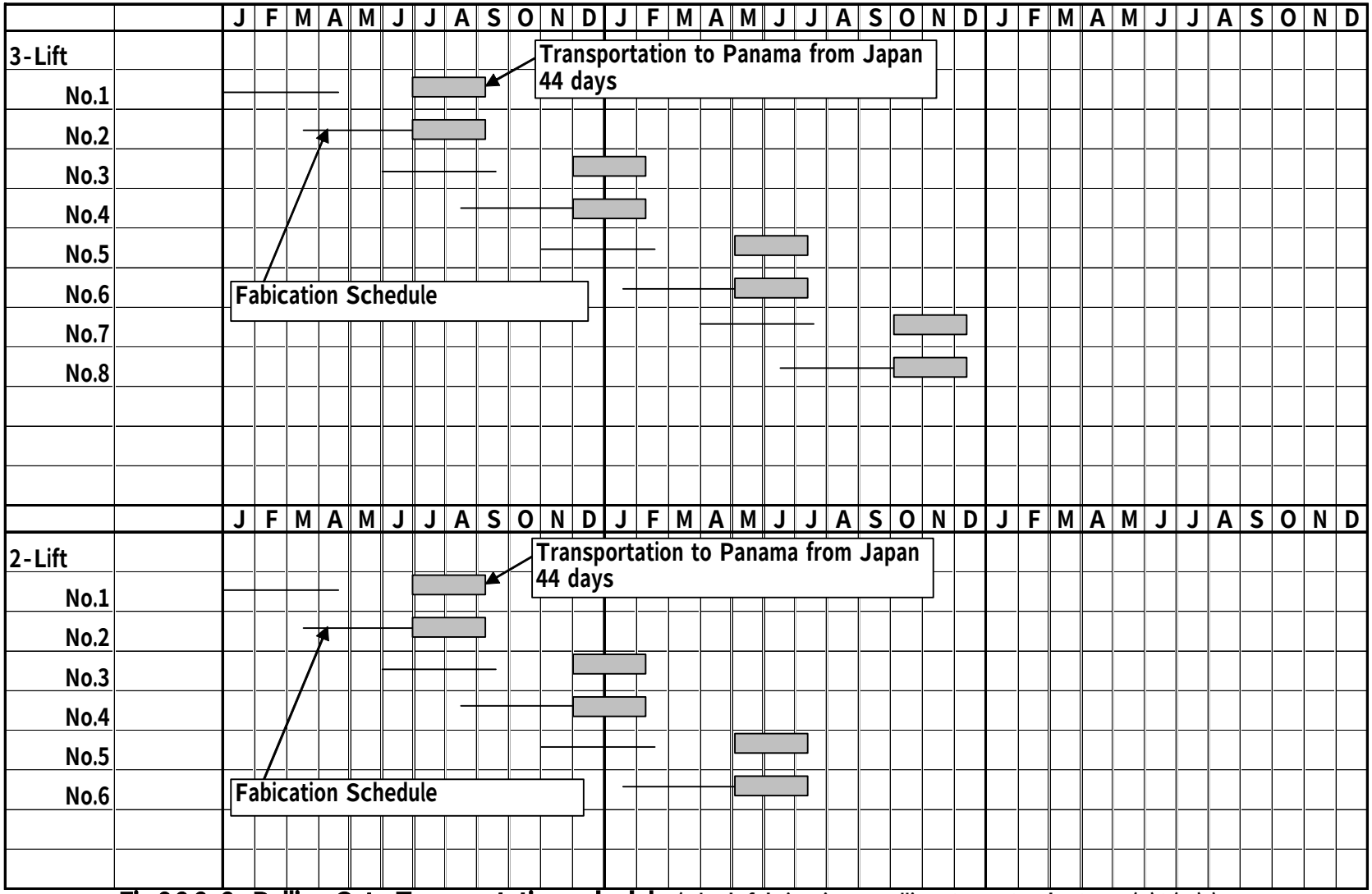

Fig.6.2.2-2 Rolling Gate Transportation schedule (Block fabrication, Rolling Gate, Study Case (II)&(III))

6.3 Evaluation of Transportation Methods (Applicable for both 2-Lift and 3-Lift)

	Features of Transportation Methods	Establishment Conditions of Transportation Methods	Suggestions caused by the Restrictions of Transportation Methods	Evaluation
One unit transportation Miter Gate Study Case (I)	• Since a large crane for unloading a large block is not available in Panama, a semi-submersible vessel is used for transportation. • Gate leaves are loaded onto the semi- submersible vessel by a floating crane, as the basis. • Unloading in Panama is executed on the sea as a requirement. • Transportation schedule shall be planned to satisfy both fabrication schedule and construction schedule.	• The method of loading large blocks onto semi-submersible vessel, method of the on-the-sea delivery at site, and the method of storage on site shall be studied sufficiently. • Since the draft on the upper face of the deck is 10m when the semi-submersible vessel is submersed to the maximum, the draft of the transport products shall be lower than 9.5m, making some allowance. • Transportation is necessary to the port on the side of gate construction. But, part of the 2-Lift type gates are impossible to pass the Panama Canal due to the width of the gate leaves. All of the 3-Lift type gates are possible to pass the Panama Canal.	• A structural change is necessary for lifting by a floating crane. • All gate leaves to be transported as one unit shall be constructed as a double skin structure so that they can be erected or laid down on the water level by pouring water into chambers.	A
One unit transportation Rolling Gate Study Case (I)	Same as above	• The method of loading large blocks onto semi-submersible vessel, method of the on-the-sea delivery at site, and the method of storage on site shall be studied sufficiently. • Since the draft on the upper face of the deck is 10m when the semi-submersible vessel is submersed to the maximum, the draft of the transport products shall be lower than 9.5m, making some allowance. • Transportation is necessary to the port on the side of gate construction. But, all of the 2- and 3-Lift type gates are impossible to pass the Panama Canal due to the draft problem.	• A structural change is necessary for lifting by two floating cranes. • All types of gate leaf are not executable in both cases of 2-Lift and 3-Lift due to the draft. (As for the draft, refer to Table 6.2.1-1.) The draft of the rolling gate to be transported shall be improved to be lower than 9.5m. (Measures refer to paragraph 7.2.1C)	B
Block transportation Miter Gate Study Case (II)&(III)	• Miter gate is transported to a designated port in Panama from the country where blocks were fabricated. • It is transported by a truck in Panama.	• A temporary storage yard is necessary for members at the forwarding port and unloading port, respectively. • When assembling work is done in a dry dock (Study Case (II)), a members storage yard is necessary in the vicinity of the dry dock for supplying these members in time for the assembly work. The transportation from the members storage yard to the dry dock shall be included in the construction cost • When assembling work is done at the construction site (Study Case (III)), a members storage yard is necessary in the vicinity of the construction site to be able to supply these members according to the assembly work. The transportation from the temporary members storage yard to the installation position shall be included in the construction cost.	• In case of study case (II), a members storage yard must be provided in the vicinity of the dry dock where large assembly is executed. • In case of study case (III), a members storage yard must be provided in the vicinity of the construction site. • Marine block transportation frequency and timing must be planned considering the transportation capacity in Panama and the spaces of members storage yards.	A
Block transportation Rolling Gate Study Case (II)&(III)	Same as above	Same as above	Same as above	A

Evaluation Criteria A: Executable B: Executable with serious conditions attached C: Not executable

7. Installation Method

Chapter 7. Installation Methods

A. Study Cases of Installation Methods

As described in Chapter 4, we study the installation methods on assumption of the Study Cases shown in Table 7-1 and Table 7-2.

This Study applies to the installation methods of Miter Gates on the Atlantic Ocean side and Rolling Gates on the Pacific Ocean side, each of 2-lift and 3-lift configurations, shown in the concept design, and, therefore, covers 12 cases in total.

Table 7-1 Study Cases of Miter Gates

Installation of Miter Gates		
Study Case	Installation Method	Execution Conditions
Study Case (I) Wet	One-unit Installation	• Gate Leaf is fabricated outside Panama. • Gate Leaf is integrated into one unit in the process of fabrication. • The integrated Gate Leaf is transported to Panama by a semi-submersible vessel. • The integrated Gate Leaf is installed at site. • The Gate Leaf is installed under the wet condition after the completion of concrete works of the Canal.
Study Case (II) Wet	One-unit Installation	• Gate Leaf is fabricated outside Panama. • Gate Leaf is fabricated with blocks being divided within the transport limit in Panama. • The divided Gate Leaves are transported to Panama by a vessel. • The divided Gate Leaves are assembled in a dry dock in Panama, and the integrated Gate Leaf is installed at site. • The Gate Leaf is installed under the wet condition after the completion of concrete works of the Canal.
Study Case (III) Dry	Block Installation	• Gate Leaf is fabricated outside Panama. • Gate Leaf is fabricated with blocks being divided within the transport limit in Panama. • The divided Gate Leaves are transported to Panama by a vessel. • The divided Gate Leaves are assembled in Panama at site. The Gate Leaf is installed at a dry place.

Table 7-2 Study Cases of Rolling Gates

Installation of Rolling Gates		
Study Case	Installation Methods	Execution Conditions
Study Case (I) Wet	One-unit Installation	• Gate Leaf is fabricated outside Panama. • Gate Leaf is integrated into one unit in the process of fabrication. • The integrated Gate Leaf is transported to Panama by a semi-submersible vessel. • The integrated Gate Leaf is installed at site. • The Gate Leaf is installed under the wet condition after the completion of concrete works of the Canal.
Study Case (II) Wet	One-unit Installation	• Gate Leaf is fabricated outside Panama. • Gate Leaf is fabricated as blocks being divided within the transport limit in Panama. • The divided Gate Leaves are transported to Panama by a vessel. • The divided Gate Leaves are assembled in a dry dock in Panama, and the integrated Gate Leaf is installed at site. • The Gate Leaf is installed under the wet condition after the completion of concrete works of the Canal.
Study Case III) Dry	Block Installation	• Gate Leaf is fabricated outside Panama. • Gate Leaf is fabricated as blocks being divided within the transport limit in Panama. • The blocks of Gate Leaves are transported to Panama by a vessel. • The Gate Leaf blocks are assembled in the concrete recess at site. The installation area is kept in a dry condition.

B. The Study Results of Installation Methods for Each Case

We have studied the installation methods for each Case categorized in Table 7-1 and Table 7-2 to prepare the installation flow, installation procedure, step diagram and construction schedule per gate. Also extracted the necessary manpower for installing each gate, and selected major equipment.

We have also studied the assembling methods of the Gate Leaves in the dry dock in Panama under the conditions shown in study case (II) in Table 7-1 and Table 7-2, and prepared schematic diagrams of the Gate Leaf assembling methods for the Miter Gate and Rolling Gate.

7.1 Details of Installation Method of Miter Gate

7.1.1 Miter Gate, Study Case (I)

The following preconditions have been established for the study of the installation method for Miter Gate:

- Gate Leaf is fabricated outside Panama.
- Gate Leaf is integrated into one unit in the process of fabrication.
- The integrated Gate Leaf is transported to Panama by a semi-submersible vessel.
- The integrated Gate Leaf is installed at site.
- The Gate Leaf is installed under the wet condition after the completion of concrete works of the Canal.

In the following Table 7.1.1-1, we have summarized the preconditions established by our study for installing major component members of Miter Gate of the Study Case (I).

Table 7.1.1-1 Preconditions for Installing Miter Gate, Study Case (I)

Major Component Members of Miter Gate	Installation Conditions
Embedded Frame	• Concreting for the Embedded Frame section is blocked out. The Embedded Frame is installed in the block-out after primary concreting is finished. • Embedded frame is installed in a dry condition.
Gate Leaf	• Gate Leaf is installed under the wet condition after the Canal concrete works and the installation of water filling and draining devices, etc. have been completed. • Tugboats is used for towing Gate Leaves to the installation position.
Operating Device	• Hydraulic Cylinders and Hydraulic Units as major components of the Operating Device is installed before installing the Gate Leaf. • Hydraulic Piping pertaining to the Operating Device is connected in an open condition or through a pit for making future maintenance easier.
Electrical Works	• Operation Control Equipment is installed before installing the Gate Leaf. • Electric piping and wiring pertaining to the Operation Control Equipment is connected in an open condition or through a pit for maintenance ease in future.

We have established the executing plans for the installation of Miter Gate, Study Case (I) by preparing installation flowchart (Fig. 7.1.1-1), installation procedure (Table 7.1.1-2), major equipment list (Table 7.1.1-3), installation step diagram (Fig. 7.1.1-2), construction schedule for 2-Lift (Table 7.1.1-4), and construction schedule for 3-Lift (Table 7.1.1-5), taking into consideration of the preconditions mentioned in Table 7.1.1-1.

Fig. 7.1.1-1 Installation Flow Chart, Miter Gate, Study Case (I)

- Flow Chart (One-unit Installation in the Wet Condition)

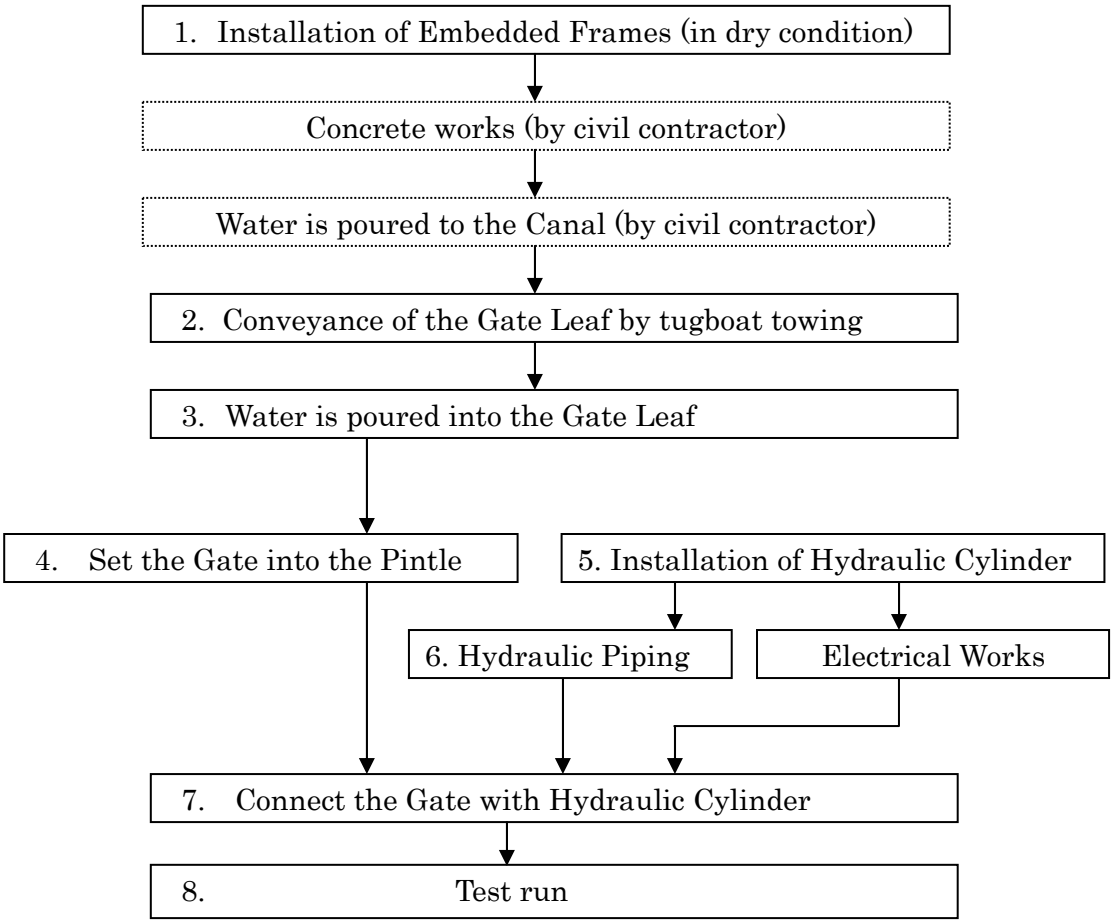

Table 7.1.1-2 Installation Procedure, Miter Gate, Study Case (I)

1. Installation of Embedded Frames
   a. The Sill Beam is correctly installed in the blockout, and thereafter secondary concrete is placed by the civil contractor.
   b. The Embedded Side Frame is installed in the blockout, which is firmly fixed with Anchor Metals and Supports to avoid displacement due to secondary concrete being placed by the civil contractor. The lift of concreting is appropriately determined by the civil contractor.
   c. The Bearing Shoe of Pintles (upper & bottom) is installed.

2. Conveyance of the Gate Leaf by tugboat towing
   a. Water is poured to the Canal.
   b. Gate Leaf is carried to installation position by tugboat towing.

3. Water is poured into the Gate Leaf
   a. Water is put into the air chamber in the Gate Leaf.
   b. Water is poured into the air chamber to put the Gate Leaf into the right posture.
   c. Floating crane supports the Gate Leaf at the right posture.

4. Set the Gate into the Pintle
   a. Gate Leaf is jointed with Pintle by floating crane.
   b. Gate Leaf is checked by diver whether it is jointed with the Pintle.

5. Installation of Hydraulic Cylinder
   a. Hydraulic Cylinder Frame is set to a predetermined position and fixed to Anchor Metals.
   b. Hydraulic Cylinder is set to the Frame.

6. Hydraulic Piping
   a. An Oil Pressure Unit is installed in a predetermined position.
   b. Oil Pressure Piping is assembled and connected with the Unit, and Oil be thereafter poured in to flush foreign substances out of the Piping with a Filter.
   c. Electrical Conduit is installed and fixed to support by Band.
   d. Electrical Wires are led into Electrical Conduit and a Terminal be connected.

7. Connect the Gate with Hydraulic Cylinder
   a. Each Hydraulic Cylinder is connected with the Gate Leaf.
   b. The Operating Device is operated to store the Gate Leaf in recess.

8. Test run
   A test run is made after completion of Gate equipment installation.

Table 7.1.1-3 Major Equipment List, Miter Gate, Study Case (I)

NAME	CAPACITY	Q'TY	NOTE
Heavy Equipment			
Floating Crane	350 ton	1	
Mobile Crane	60 ton	1	
Operating System on Ship		1	
Welding Machine		5	
Electric Power	100KVA	1set	
Warehouse		As required	
Site Office		1	

STEP 1

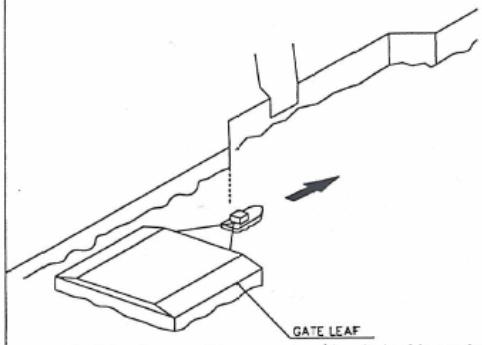

1. Water is poured to a canal, and gate leaf is carried by tugboats.
2. Gate leaf is carried to installation position

STEP 2

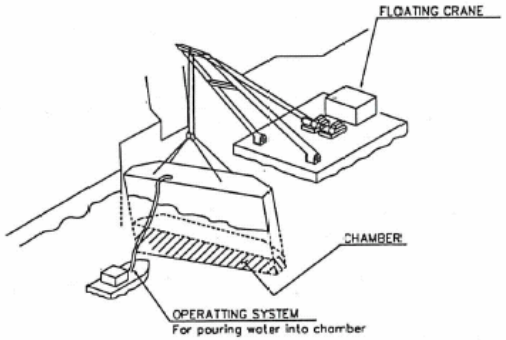

1. Water is put into air chamber and gate leaf is made into the right posture.
2. Floating crane supports gate leaf at the right posture

STEP 3

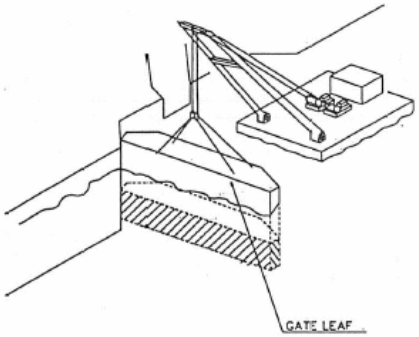

1. Gate leaf is set onto pintle by floating crane.
2. Diver checks whether gate leaf is set onto the pintle

STEP 4

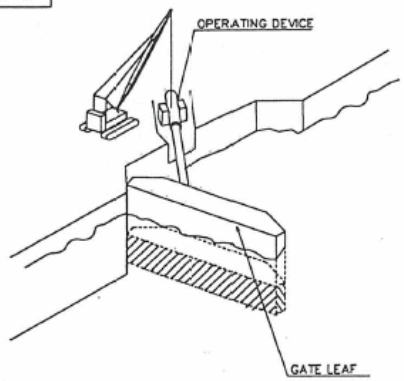

1. Installation of the hydraulic cylinder.
2. Connect the gate with the hydraulic cylinder

INSTALLATION STEP DIAGRAM, MITER GATE CASE (I)
Fig.7.1.1−2

Table 7.1.1.4 Construction Schedule of Miter Gate, 2-Lift

Study Case(I) WET, One-unit Installation for One Gate Leaf

		MONTH												
		1			2			3			4			
SCHEDULE	Preparation													
	Operating device			Install										
	Hydraulic piping													
	Electric wiring													
	Paint													
	Unloading the gate													
	Gate leaf								Set the gate					
	Adjustment of gate & Operating device													
MANPOWER														man/day
	Engineer				3/day									265
	Foreman				3/day									265
	Ganger				5/day									440
	Iron worker				50/day									4,375
	welder				5/day									250
	Painter							15/day						375
	Pipe fitter				15/day									375
	Electrician							15/day						375
	Diver								10/day					125
	Labourer					50/day								4,375
	TOTAL		2,900			3,275			3,650			1,395		11,220
MAJOR EQUIPMENT														month/set
	Floating crane 350ton								1/day					0.5
	Mobile crane 60ton			1/day							1/day			2.5
	Diver's equipment								As required					0.5
	Operating system on ship								1/day					0.5
	Welding machine				5/day									17.5
	Electric power				100KVA									3.5
	Truck				As required									3.5

Table 7.1.1.5 Construction Schedule of Miter Gate, 3-Lift

Study Case(I) WET, One-unit Installation for One Gate Leaf

		MONTH												
		1			2			3			4			
SCHEDULE	Preparation													
	Operating device			Install										
	Hydraulic piping													
	Electric wiring													
	Paint													
	Unloading the gate													
	Gate leaf								Set the gate					
	Adjustment of gate & Operating device													
MANPOWER														man/day
	Engineer				3/day									265
	Foreman				3/day									265
	Ganger				5/day									440
	Iron worker				50/day									4,375
	welder				5/day									250
	Painter							15/day						375
	Pipe fitter				15/day									375
	Electrician							15/day						375
	Diver								10/day					125
	Labourer					50/day								4,375
	TOTAL		2,900			3,275			3,650			1,395		11,220
MAJOR EQUIPMENT														month/set
	Floating crane 350ton								1/day					0.5
	Mobile crane 60ton			1/day							1/day			2.5
	Diver's equipment								As required					0.5
	Operating system on ship								1/day					0.5
	Welding machine				5/day									17.5
	Electric power				100KVA									3.5
	Truck				As required									3.5

7.1.2 Miter Gate, Study Case (II)

The following preconditions have been established for the study of the installation method for Miter Gate:

- Gate Leaf is fabricated outside Panama.
- Gate Leaf is fabricated with blocks being divided within the transport limit in Panama.
- The divided Gate Leaves are transported to Panama by a vessel.
- The divided gate laves are assembled in Panama, and the integrated Gate Leaf is installed at site.
- The Gate Leaf is installed under the wet condition after the completion of concrete works of the Canal.

In the following Table 7.1.2-1, we have summarized the preconditions established by our study for installing major component members of Miter Gate of the Study Case (II).

Table 7.1.2-1 Preconditions for Installing Miter Gate, Study Case (II)

Major Component Members of Miter Gate	Installation Conditions
Embedded Frame	• Concreting for the Embedded Frame section shall blocked out. The Embedded Frame is installed in the block-out after primary concreting is finished. • Embedded Frame is installed in a dry condition.
Gate Leaf	• Gate Leaf is installed under the wet condition after the Canal concrete works and the installation of water filling and draining devices, etc. have been completed. • Tugboats is used for towing the Gate Leaf fabricated at a Panamanian dry dock to the installation point, because the Canal is watered at the time of its installation.
Operating Device	• Hydraulic cylinders and hydraulic units as major components of the Operating Device is installed before installing the Gate Leaf. • Hydraulic piping pertaining to the Operating Device is connected in an open condition or through a pit for making future maintenance easier.
Electrical Works	• Operation control equipment is installed before installing the Gate Leaf. • Electric Piping and Wiring pertaining to the Operation Control Equipment is connected in an open condition or through a pit for making future maintenance easier.

We have established the executing plans for the installation of Miter Gate, Study Case (II) by preparing installation flowchart (Fig. 7.1.2-1), installation procedure (Table 7.1.2-2), major equipment list (Table 7.1.2-3), installation step diagram (Fig. 7.1.2-2), construction schedule for 2-Lift (Table 7.1.2-4), and construction schedule for 3-Lift (Table 7.1.2-5), taking into consideration of the preconditions mentioned in Table 7.1.2-1.

Fig. 7.1.2-1 Installation Flow Chart, Miter Gate, Study Case (II)

- Flow chart (Dry-dock Assembly in Panama & One-unit Installation in the Wet Condition)

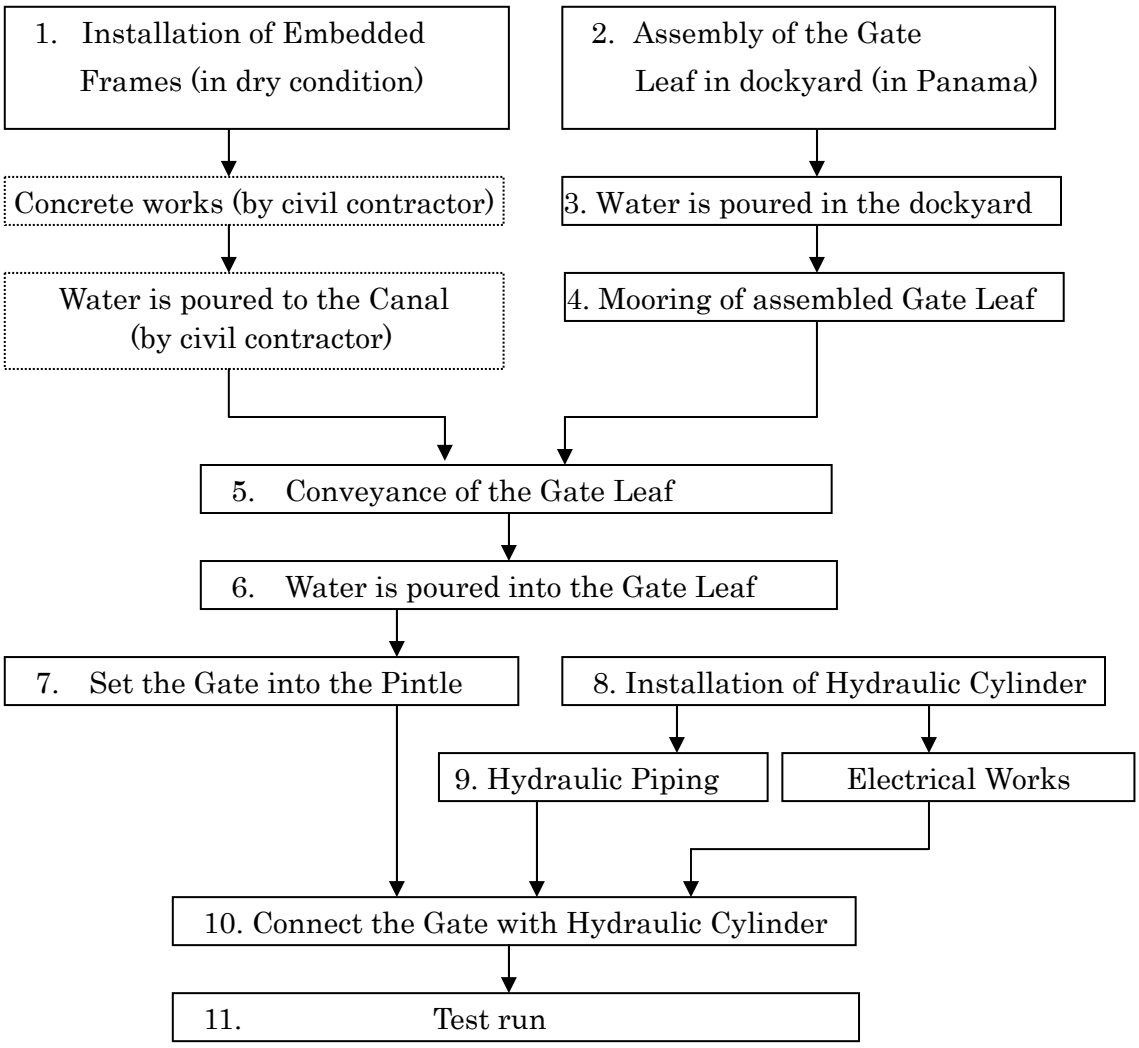

Table 7.1.2-2 Installation Procedure, Miter Gate, Study Case (II)

1. Installation of Embedded Frames (in dry condition)
   a. The Sill Beam is correctly installed in the blockout, and thereafter secondary concrete is placed by the civil contractor.
   b. The Embedded Side Frame is installed in the blockout, which is firmly fixed with Anchor Metals and Supports to avoid displacement due to secondary concrete being placed by the civil contractor. The lift of concreting is appropriately determined by the civil contractor.
   c. The Bearing Shoe of Pintles (upper & bottom) is installed.

2. Assembly of the Gate Leaf in dockyard (in Panama)
   a. Gate Leaf is assembled in a dockyard, and is welded.
   b. The inside of a dockyard is kept in the dry condition.

3. Water is poured in the dockyard
   Water is collected in a dockyard.

4. Mooring of assembled Gate Leaf
   Assembled Gate Leaf is towed and moored to the shore by tugboats.

5. Conveyance of the Gate Leaf
   a. Water is poured to a canal.
   b. Gate Leaf is towed to installation position by tugboats.

6. Water is poured into the Gate Leaf
   a. Water is put into the air chamber in the Gate Leaf.
   b. Water is put into the air chamber and the Gate Leaf is made into the right posture.
   c. Floating crane supports Gate Leaf at the right posture.

7. Set the gate into the Pintle
   a. Gate Leaf is jointed to Pintle by floating crane.
   b. Gate Leaf is checked by diver whether it is jointed with the Pintle.

8. Installation of the Hydraulic Cylinder
   a. Hydraulic Cylinder Frame is set to a predetermined position and be fixed to Anchor Metals.
   b. Hydraulic Cylinder is set to the Frame.

9. Hydraulic Piping
   a. An Oil Pressure Unit is installed in a predetermined position.
   b. Oil Pressure Piping is assembled and connected with the Unit, and Oil is thereafter poured in to flush foreign substances out of the Piping with a Filter.

c. Electrical Conduit is installed and fixed to Support by Band.
d. Electrical Wires are led into Electrical Conduit and a Terminal is connected.

10. Connect the Gate with Hydraulic Cylinder
    a. Each Hydraulic Cylinder is connected with the Gate Leaf.
    b. The operating Device is operated to store the Gate Leaf in the recess.

11. Test run
    A test run is made after completion of Gate Equipment installation.

Table 7.1.2-3 Major Equipment List, Miter Gate, Study Case (II)

NAME	CAPACITY	Q'TY	NOTE
Heavy Equipment			
Floating Crane	350 ton	1 set	
Mobile Crane	360 ton	2 sets	
Mobile Crane	160 ton	2 sets	
Mobile Crane	60 ton	1 set	
Welding Machine		35	
Diver's Equipment		As required	
Truck		As required	
Electric Power	600KVA	1set	
Scaffolding		1 set	
Warehouse		As required	
Site Office		1 set	

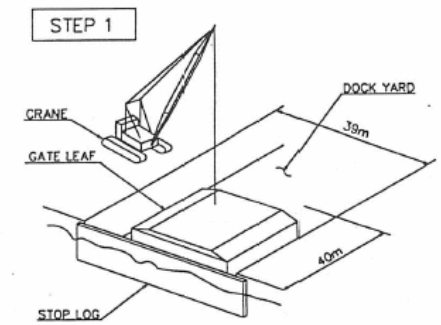

1. The gate leaf is assembled in the dock yard.
2. The area of 39mx40m is required for assembly of gate, and the space of a crane is also required. (One gate)

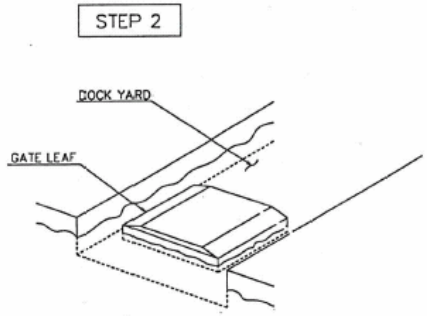

Water is poured to the dock yard.

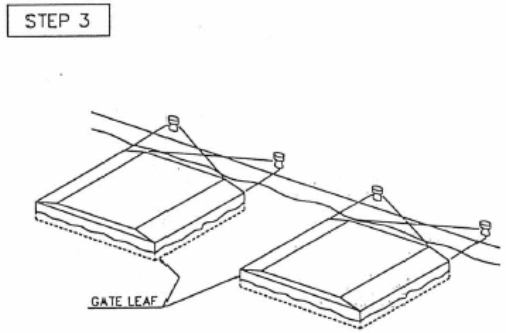

Gate leaf is carried and moored from the dock yard.

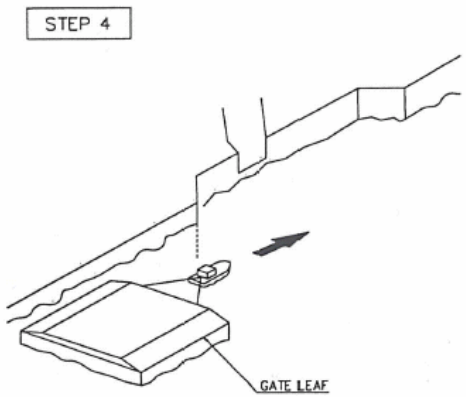

Gate leaf is carried to installation position

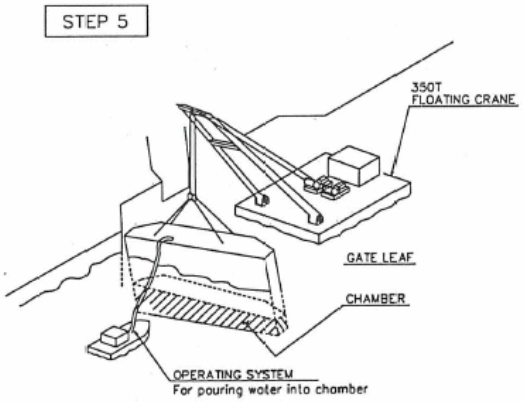

1. Water is put into air chamber and gate leaf is made into the right posture.
2. Floating crane supports gate leaf at the right posture

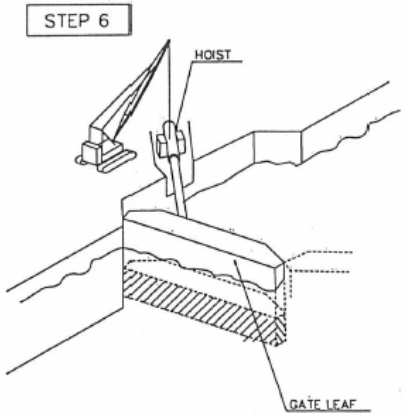

1. Installation of the hydraulic cylinder.
2. Connect the gate with the hydraulic cylinder

INSTALLATION DIAGRAM, MITER GATE CASE (II)
Fig.7.1.2-2

Table 7.1.2.4 Construction Schedule of Miter Gate, 2-Lift

Study Case(II) WET, Block Installation at Drydock for One Gateleaf

		MONTH														
		1	2	3	4	5	6	7	8	9		1	2	3	4	
SCHEDULE	[DRY DOCK ASSEMBLY]															
	Preparation			Assembly												
				Welding												
	Paint								Gate							
	Launch															
	[INSTALLATION]															
	Hoist															
	Hydraulic piping															
	Electric wiring															
	Paint													Operating device		
	Gate leaf															
	Adjustment of gate & Operating device															
MANPOWER																man/day
	Engineer				3/da								3/da			940
	Foreman				5/day								3/day			1,390
	Ganger				10/day								5/day			2,690
	Iron worker				110/day								50/day			22,250
	Welder				35/day							5/day				5,500
	Painter								50/day					15/day		2,875
	Pipe fitter												15/day			375
	Electrician													15/day		375
	Diver									10/day				10/day		250
	Labourer				110/day				50/day				50/day			25,375
	TOTAL	6,388	6,825	6,825	6,825	6,825	6,825	4,888	2,950	2,450		2,900	3,275	3,650	1,395	62,020
MAJOR EQUIPMENT																month/set
	Floating crane 350ton									1/day				1/day		1.0
	Mobile crane 360ton			2/day												5.0
	Mobile crane 160ton	2/day														7.5
	Mobile crane 60ton							1/day					1/day			4.5
	Welding machine				35/day				5/day				5/day			257.5
	Diver's equipment									As required				As required		0.5
	Truck				As required								As required			12.5
	Electric power				650KVA								100KVA			12.5
	Scaffolding				As required								As required			12.5

Table 7.1.2.5 Construction Schedule of Miter Gate, 3-Lift

Study Case(II) WET, Block Installation at Drydock for One Gate Leaf

		MONTH														
		1	2	3	4	5	6	7	8	9		1	2	3	4	
SCHEDULE	[DRY DOCK ASSEMBLY]															
	Preparation			Assembly												
				Welding												
	Paint								Gate							
	Launch															
	[INSTALLATION]															
	Hoist															
	Hydraulic piping															
	Electric wiring															
	Paint													Operating device		
	Gate leaf															
	Adjustment of gate & Operatimg device															
MANPOWER																man/day
	Engineer				3/da								3/da			940
	Foreman				5/day								3/day			1,390
	Ganger				10/day								5/day			2,690
	Iron worker				110/day								50/day			22,250
	Welder				35/day							5/day				5,500
	Painter								50/day					15/day		2,875
	Pipe fitter												15/day			375
	Electrician													15/day		375
	Diver									10/day				10/day		250
	Labourer				110/day				50/day				50/day			25,375
	TOTAL	6,388	6,825	6,825	6,825	6,825	6,825	4,888	2,950	2,450		2,900	3,275	3,650	1,395	62,020
MAJOR EQUIPMENT																month/set
	Floating crane 350ton									1/day				1/day		1.0
	Mobile crane 360ton			2/day												5.0
	Mobile crane 160ton	2/day														7.5
	Mobile crane 60ton							1/day					1/day			4.5
	Welding machine				35/day				5/day				5/day			257.5
	Diver's equipment									As required				As required		0.5
	Truck				As required								As required			12.5
	Electric power				650KVA								100KVA			12.5
	Scaffolding				As required								As required			12.5

7.1.3 Miter Gate, Study Case (III)

The following preconditions have been established for the study of the installation method for Miter Gate:

- Gate Leaf is fabricated outside Panama.
- Gate Leaf is fabricated as blocks being divided within the transport limit in Panama.
- The divided Gate Leaves are transported to Panama by a vessel.
- The divided Gate Leaves are transported by truck to the site, and assembled at site. The Gate Leaf is installed at a dry place.

In the following Table 7.1.3-1, we have summarized the preconditions established by our study for installing major component members of Miter Gate of the Study Case (III).

Table 7.1.3-1 Preconditions for Installing Miter Gate, Study Case (III)

Major component members of Miter Gate	Installation conditions
Embedded Frame	• Concreting for the Embedded Frame section is blocked out. The Embedded Frame is installed in the block-out after primary concreting is finished. • Embedded Frame is installed in a dry condition.
Gate Leaf	• Gate Leaf is installed under a dry condition after the Canal concrete works has been completed partially. • Lock wall and the bottom concrete slab at the lock head section is presumed to have been completed before starting Gate Leaf installation.
Operating Device	• Hydraulic Cylinders and Hydraulic Units as major components of the Operating Device are installed before installing the Gate Leaf. • Hydraulic Piping pertaining to the Operating Device is connected in an open condition or through a pit for making future maintenance easier.
Electrical Works	• Operation Control Equipment is installed after installing the Operating Device. • Electric Piping and Wiring pertaining to the OperationControl Equipment is connected in an open condition or through a pit for maintenance ease in future.

We have established the executing plans for the installation of Miter Gate, Study Case (III) by preparing installation flowchart (Fig. 7.1.3-1), installation procedure (Table 7.1.3-2), major equipment list (Table 7.1.3-3), installation step diagram (Fig. 7.1.3-2), construction schedule for 2-Lift (Table 7.1.3-4), and construction schedule for 3-Lift (Table 7.1.3-5), taking into consideration of the preconditions mentioned in Table 7.1.3-1.

Fig. 7.1.3-1 Installation Flow Chart, Miter Gate, Study Case (III)

- Flow chart (Block Installation in the Dry Condition)

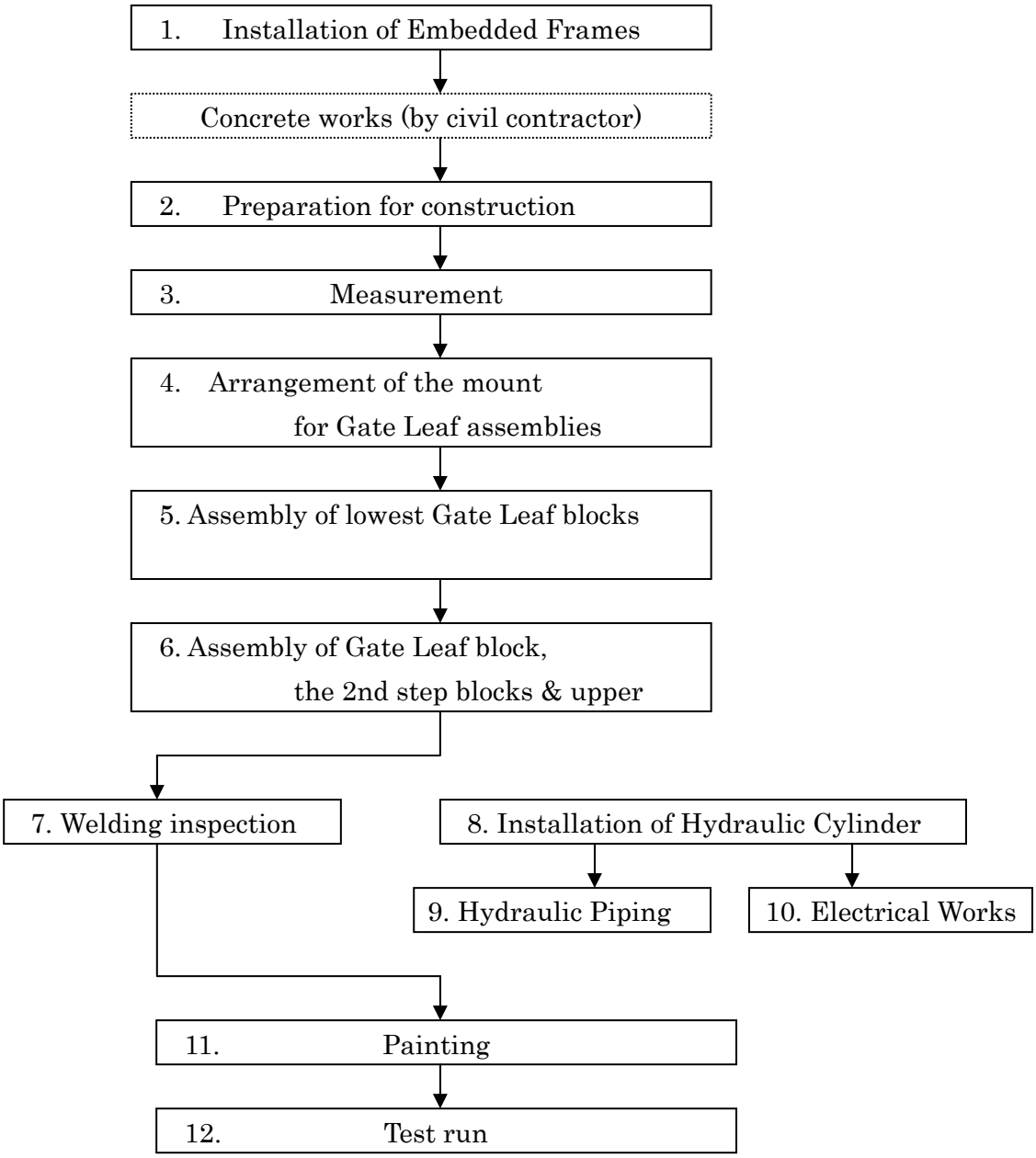

Table 7.1.3-2 Installation Procedure, Miter Gate, Study Case (III)

1. Installation of Embedded Frames
   a. The Sill Beam is correctly installed in the blockout, and thereafter secondary concrete is placed by the civil contractor.
   b. The Embedded Side Frame is installed in the blockout, which is firmly fixed with Anchor Metals and Supports to avoid displacement due to secondary concrete being placed by the civil contractor. The lift of concreting is appropriately determined by the civil contractor.
   c. The Bearing Shoe of Pintles (upper & bottom) is installed.

2. Preparation for construction
   a. The approach road is made by the civil contractor for carrying in of the Gate components and mobile crane.
   b. The ground of working area for installation is prepared so that crane can operate.
   c. The space for a warehouse and equipment is secured.
   d. Transformer and electric power are secured.

3. Measurement
   a. The position for installing Embedded Frame is measured and marked by chalk on the primary concrete.
   b. Positions for installation of Gate and Oil Pressure Cylinder are also measured and marked by chalk on the primary concrete.

4. Arrangement of the mount for Gate Leaf assemblies
   a. A steel mount of suitable height is made for supporting Gate.
   b. The supporting position by a mount is determined so as to avoid touching the rubber seal and the welded seam.
   c. A mount is of the construction which can be easily removed after finishing installation of Gate Leaf.

5. Assembly of lowest Gate Leaf blocks
   a. Since it becomes the standard of the whole Gate blocks, bottom Gate blocks are assembled correctly. The level and perpendicularity of the assembled blocks are checked.
   b. Assembly of Gate Leaf blocks is performed using the erection plates attached to them at the factory, and notch pins and bolts.
   c. After the assembly of Gate Leaf blocks, the level difference in the Leaf and the crevice in welded joints are checked.
   d. Temporary support is employed for the assembly of Gate Leaf blocks to prevent them from falling.

6. Assembly of Gate Leaf blocks, the 2nd step blocks and upper
   a. After setting temporary supports to the installed bottom Gate Leaf block,

scaffolding is installed on the upstream and downstream sides of the bottom Gate block. Scaffolding is also provided inside of the bottom Gate Leaf block.

b. After assembling the 2nd step of Gate Leaf block, the level difference and route gap of each welding part is checked and secured.

c. The assembly of Gate Leaf blocks thereafter is performed by repeating the same cycle of method.

7. Welding inspection

After completing site welding of Gate Leaf, the welded seams are checked by X-ray or UT inspection.

8. Installation of Hydraulic Cylinder

a. Hydraulic Cylinder Frame is set to a predetermined position and fixed to Anchor Metals.

b. Hydraulic Cylinder is set to the Frame.

9. Hydraulic Piping

a. An Oil Pressure Unit is installed in a predetermined position.

b. Oil Pressure Piping is assembled and connected with the Unit, and Oil is thereafter poured in to flush foreign substances out of the piping with a filter.

10. Electrical Works

a. Electrical Conduit is installed and fixed to support by band.

b. Electrical Wires are led into electrical conduit and a terminal be connected.

c. Operation test of Electrical Equipment is performed.

e. Each Hydraulic Cylinder is connected with Gate Leaf.

11. Painting

a. Painting is performed according to the contract specification.

b. Standard painting system consists of base coating, middle coating, and top coating.

c. Painting is inspected after completion, based upon contract specification.

12. Test run

a. A test run is made after completion of Gate equipment installation.

b. Temporary supports, etc. are removed before a test run.

Table 7.1.3.3 Major Equipment List, Miter Gate, Study Case (III)

NAME	CAPACITY	Q'TY	NOTE
Heavy Equipment		1	
Mobile Crane	360 ton	1	
Mobile Crane	160 ton	2	
Mobile Crane	60 ton	1	
Welding Machine		35	
Electric Power	500KVA	1set	
Warehouse		As required	
Site Office		1	
Scaffolding	φ48.6mm Pipe	As required	

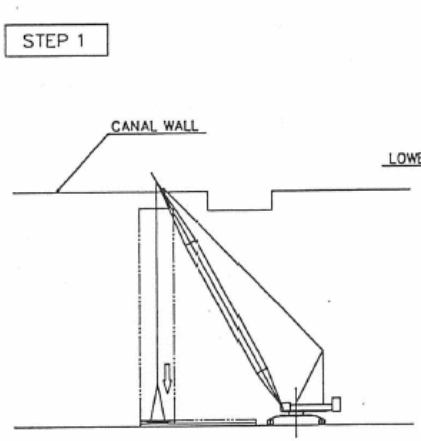

1. Installation of embedded frames.
2. Concrete works by others(civil contractor)

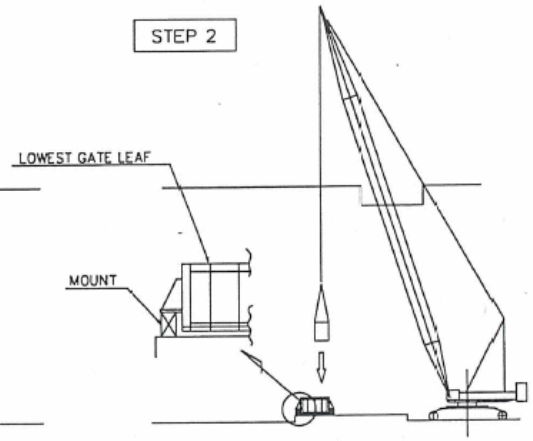

1. Arrangement of the mount for gate leaf assemblies.
2. Assembly of lowest gate leaf blocks.

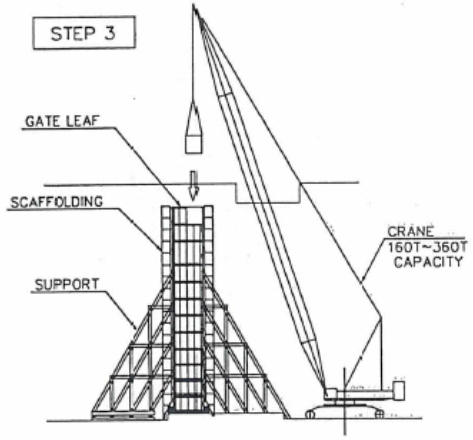

1. Assembly of gate leaf blocks, 2nd step blocks and upper.
2. Welding and welding inspection.

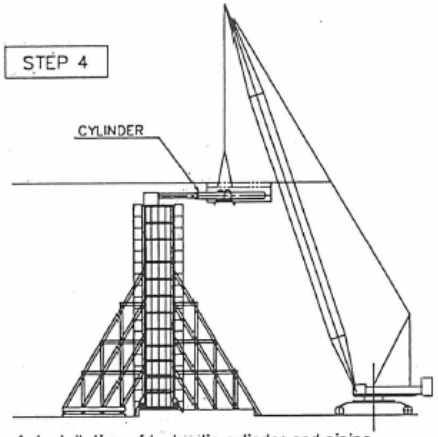

1. Installation of hydraulic cylinder and piping.
2. Electric construction.
3. Painting

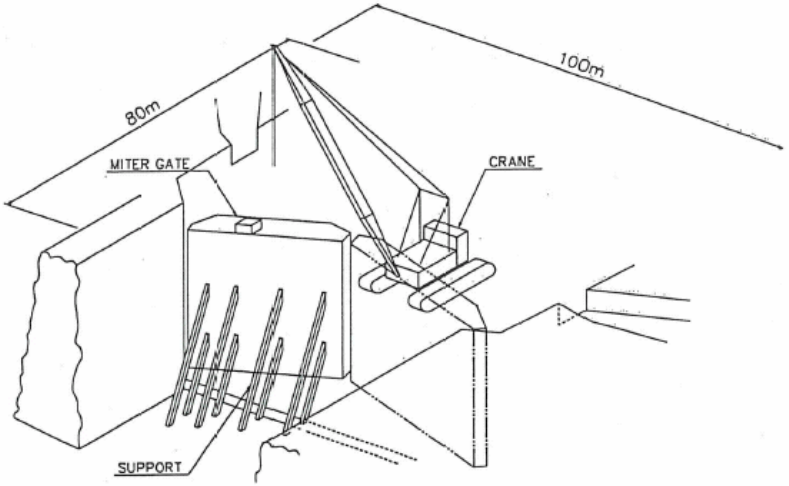

WORKING AREA

Working area is 80m×100m for installation of one gate.

INSTALLATION STEP DIAGRAM, MITER GATE CASE (III)

Fig.7.1.3–2

Table 7.1.3.4 Construction Schedule of Miter Gate, 2-Lift

Study Case(III) DRY, Block Installation at Site for One Gate Leaf

		MONTH												
		1	2	3	4	5	6	7	8	9	10	11	12	
SCHEDULE														
	Gate leaf				INSTALL									
					WELDING									
	Hoist													
	Hydraulic piping													
	Electric wiring													
	Paint							GATE		OPERATING DEVICE				
	Adjustment of gate & Operating device													
MANPOWER														man/day
	Engineer	3/day												750
	Foreman	5/day												1,250
	Ganger	10/day												2,500
	Iron worker					110/day				50/day				22,250
	Welder					35/day			5/day					5,500
	Painter								50/day	15/day				2,875
	Electrician									15/day				375
	Pipe fitter								15/day					375
	Labourer					110/day				50/day				22,250
	TOTAL	6,388	6,825	6,825	6,825	6,825	6,825	5,575	4,700	4,013	3,325			58,125
MAJOR EQUIPMENT														month/set
	Mobile crane 60t						1/day							5.5
	Mobile crane 160t	2/day												4
	Mobile crane 360t			2/day										7
	Welding machine				35/day					5/day				260
	Electric power				650KVA									10
	Truck													10
	Scaffolding				As required									10

Table 7.1.3.5 Construction Schedule of Miter Gate, 3-Lift

Study Case(III) DRY, Block Installation at Site for One Gate Leaf

		MONTH												
		1	2	3	4	5	6	7	8	9	10	11	12	
SCHEDULE														
	Gate leaf	INSTALL												
		WELDING												
	Operating device													
	Hydraulic piping													
	Electric wiring													
	Paint							GATE		OPERAING DEVICE				
	Adjustment of gate & Operating device													
MANPOWER														man/day
	Engineer	3/day												750
	Foreman	5/day												1,250
	Ganger	10/day												2,500
	Iron worker					110/day				50/day				22,250
	Welder				35/day				5/day					5,500
	Painter								50/day	15/day				2,875
	Electrician									15/day				375
	Pipe fitter								15/day					375
	Labourer					110/day				50/day				22,250
	TOTAL	6,388	6,825	6,825	6,825	6,825	6,825	5,575	4,700	4,013	3,325			58,125
MAJOR EQUIPMENT														month/set
	Mobile crane 60ton						1/day							5.5
	Mobile crane 160ton	2/day												4.0
	Mobile crane 360ton			2/day										7.0
	Welding machine				35/day					5/day				260.0
	Electric power				650KVA									10.0
	Truck				As required									10.0
	Scaffolding				As required									10.0

7.2 Details of Installation Method of Rolling Gate

7.2.1 Rolling Gate, Study Case (I)

The following preconditions have been established for the study of the installation method for Rolling Gate:

- Gate Leaf is fabricated outside Panama.
- Gate Leaf is integrated into one unit in the process of fabrication.
- The integrated Gate Leaf is transported to Panama by a semi-submersible vessel.
- The integrated Gate Leaf is installed at site.
- The Gate Leaf is installed under the wet condition after the completion of concrete works of the Canal.

In the following Table 7.2.1-1, we have summarized the preconditions established by our study for installing major component members of Rolling Gate of the Study Case (I).

Table 7.2.1-1 Preconditions for Installing Rolling Gate, Study Case (I)

Major component members of Rolling Gate	Installation conditions
Embedded Frame	• Concreting for the Embedded Frame section is blocked out. The Embedded Frame is installed in the block-out after primary concreting is finished. • Embedded frame is installed in a dry condition.
Gate Leaf	• Gate Leaf is installed under the wet condition after the Canal concrete works and the installation of water filling and draining devices, etc. are completed. • Tugboats are used for towing Gate Leaves near to the installation position.
Operating Device	• Operating Device is installed after installing the Gate Leaf. • Wire ropes connect the Operating Device to the Gate Leaf.
Electrical Works	• Operation Control Equipment is installed after installing the Gate Leaf. • Electrical wiring pertaining to the operation Control Equipment is connected through a Conduit.

We have established the executing plans for the installation of Rolling Gate, Study Case (I) by preparing installation flowchart (Fig. 7.2.1-1), installation procedure (Table 7.2.1-2), major equipment list (Table 7.2.1-3), installation step diagram (Fig. 7.2.1-2), construction schedule for 2-Lift (Table 7.2.1-4), and construction schedule for 3-Lift (Table 7.2.1-5), taking into consideration of the preconditions mentioned in Table 7.2.1-1.

Fig. 7.2.1-1 Installation Flow Chart, Rolling Gate, Study Case (I)

- Flow chart (One-unit Installation in the Wet Condition)

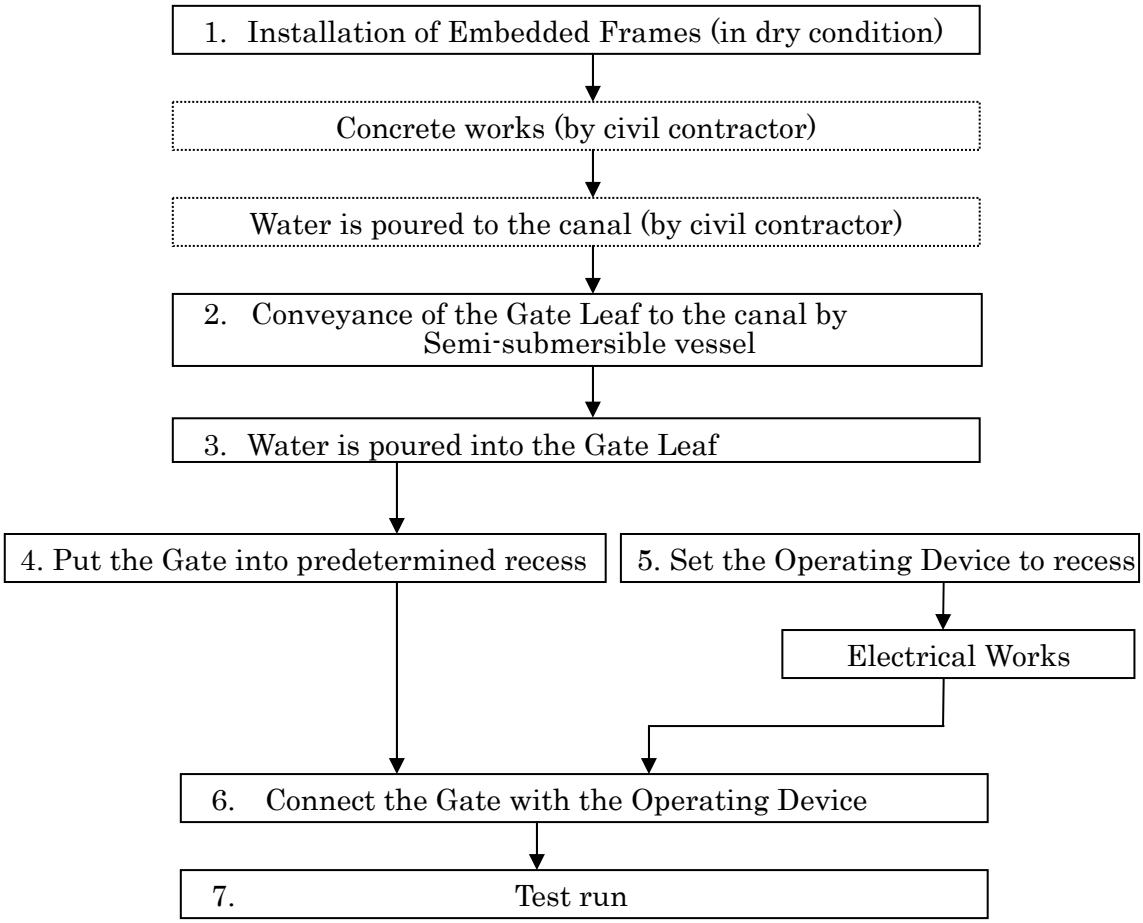

Table 7.2.1.2 Installation Procedure, Rolling Gate, Study Case (I)

1. Installation of Embedded Frames
   a. The Sill Beam is correctly installed in the block-out, and thereafter secondary concrete is placed by the civil contractor.
   b. The Embedded Side Frame is installed in the block-out, which is firmly fixed with Anchor Metals and Supports to avoid displacement due to secondary concrete being placed by the civil contractor. The lift of concreting is appropriately determined by the civil contractor.

2. Conveyance of the Gate Leaf to the Canal by Tugboats
   a. Water is poured to the canal.
   b. Gate Leaf is carried to installation position by Tugboats.

3. Water is poured into the Gate Leaf
   a. Water is put into the air chamber in the Gate Leaf.
   b. Water is put into the air chamber and the Gate Leaf is made into the right posture.
   c. Floating crane hangs and holds the Gate Leaf at the right posture.

4. Put the gate into predetermined recess
   a. The Gate Leaf hung and held by floating crane is carried into recess by the Operating Device.
   b. Stoplogs are dropped in the slot, and water in the recess is drained.

5. Set the Operating Device to recess & Electrical works
   a. The Base Frame for the Operating Device is set to a predetermined position and fixed to Anchor Metals.
   b. The Operating Device is set to the Base Frame.
   c. Electrical Conduit is installed and fixed to support by band.
   d. Electrical Wires is led into Electrical Conduit and a Terminal is connected.
   e. Operation test of Electrical Equipment is carried out.

6. Connect the Gate with the Operating Device
   a. Upper and Lower Wagons are connected with the Gate Leaf.
   b. The Gate Leaf is connected with the Operating Device by Wire Ropes.
   c. The Operating Device is operated to store the Gate in the recess.

7. Test run
   A test run is made after completion of Gate Equipment installation.

Table 7.2.1-3 Major Equipment List, Rolling Gate, Study Case (I)

NAME	CAPACITY	Q'TY	NOTE
Heavy Equipment			
Floating Crane	350 ton	1	
Mobile Crane	60 ton	1	
Operating System on Ship		1	
Welding Machine		5	
Electric Power	100KVA	1 set	
Warehouse		As required	
Site Office		1	

STEP 1

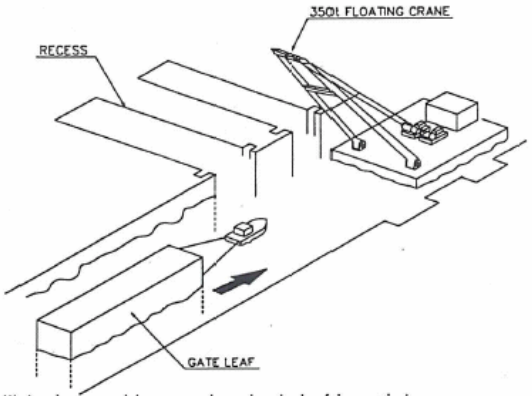

Water is poured to a canal, and gate leaf is carried.
Gate leaf is carried to installation position

STEP 2

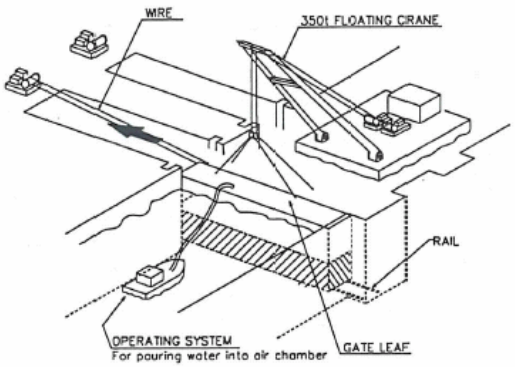

1. Water is put into air chamber and gate leaf is made into the right posture.
2. Floating crane supports gate leaf at the right posture
3. Installation of the hoist and electric wiring.

STEP 3

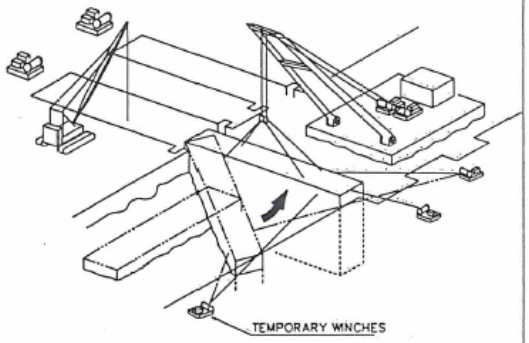

1. Beforehand, wagon is arranged in recess.
2. The direction of Gate leaf is changed by temporary winches.

STEP 4

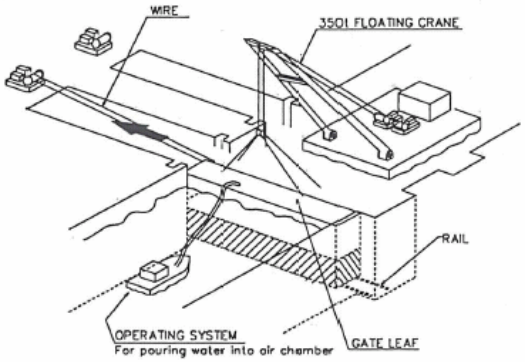

1. Gate leaf is put into recess by floating crane.
2. Gate leaf is connected with operating device wire.
3. The operating device is operated and gate is stored in recess

STEP 5

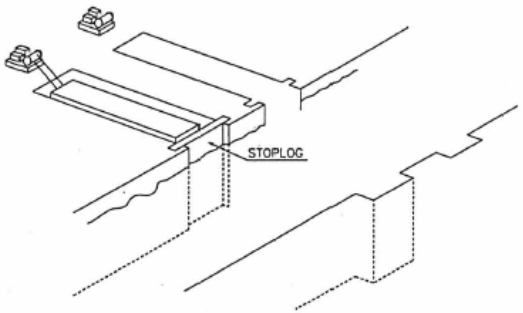

1. Stoplog is slotted in recess after storing of Gate leaf.
2. Diver checks whether gate is set onto the rail .
3. Drainage in recess is performed and it changes into a dry state.

INSTALLATION STEP DIAGRAM, ROLLING GATE CASE(I)
Fig.7.2.1-2

Table 7.2.1.4 Construction Schedule of Rolling Gate, 2-Lift

Study Case(I) WET, One-unit Installation for One Gate Leaf

		MONTH												
		1			2			3			4			
SCHEDULE	Preparation													
	Operating device			Install										
	Electric wiring													
	Paint													
	Unloading the gate													
	Gate leaf								Set the gate					
	Adjustment of gate & Operating device													
MANPOWER														man/day
	Engineer					3/day								265
	Foreman					3/day								265
	Ganger					5/day								440
	Iron worker					50/day								4,375
	welder				5/day									250
	Painter							15/day						375
	Mechanic(Operating device)							10/day						250
	Electrician							15/day						375
	Diver								10/da					125
	Labourer					50/day								4,375
	TOTAL		2,900			2,900			3,900			1,395		11,095
MAJOR EQUIPMENT														month/set
	Floating crane 350ton								1/day					0.5
	Mobile crane 60ton					1/day								3.5
	Diver's equipment								As required					0.5
	Operating system on ship								1/day					0.5
	Welding machine					5/day								17.5
	Electric power				100KVA									3.5
	Truck				As required									3.5

Table 7.2.1.5 Construction Schedule of Rolling Gate, 3-Lift

Study Case(I) WET, One-unit Installation for One Gate Leaf

		MONTH												
		1			2			3			4			
SCHEDULE	Preparation													
	Operating device			Install										
	Electric wiring													
	Paint													
	Unloading the gate													
	Gate leaf								Set the gate					
	Adjustment of gate & operating device													
MANPOWER														man/day
	Engineer					3/day								265
	Foreman					3/day								265
	Ganger					5/day								440
	Iron worker					50/day								4,375
	welder				5/day									250
	Painter								15/day					375
	Mechanic(Operating device)								10/day					250
	Electrician								15/day					375
	Diver								10/da					125
	Labourer					50/day								4,375
	TOTAL		#####			#####			#####			#####		11,095
MAJOR EQUIPMENT														month/set
	Floating crane 350ton								1/day					0.5
	Mobile crane 60ton					1/day								3.5
	Diver's equipment								As required					0.5
	Operating system on ship								1/day					0.5
	Welding machine					5/day								17.5
	Electric power				100KVA									3.5
	Truck				As required									3.5

7.2.2 Rolling Gate, Study Case (II)

The following preconditions have been established for the study of the installation method for Rolling Gate:

- Gate Leaf is fabricated outside Panama.
- Gate Leaf is fabricated as blocks being divided within the transport limit in Panama.
- The divided Gate Leaves are transported to Panama by a vessel.
- The divided Gate Leaves are assembled in Panama, and the integrated Gate Leaf is installed at site.
- The Gate Leaf is installed under the wet condition after the completion of concrete works of the Canal.

In the following Table 7.2.2-1, we have summarized the preconditions established by our study for installing major component members of Rolling Gate of the Study Case (II).

Table 7.2.2-1 Preconditions for Installing Rolling Gate, Study Case (II)

Major Component Members of Rolling Gate	Installation Conditions
Embedded Frame	• Concreting for the Embedded Frame section is blocked out. The Embedded Frame is installed in the block-out after primary concreting is finished. • Embedded Frame is installed in a dry condition.
Gate Leaf	• Gate Leaf is installed under the wet condition after the Canal concrete works and the installation of water filling and draining devices, etc. is completed. • Tugboats are used for towing Gate Leaf fabricated at a Panamanian dry dock to the installation point.
Operating Device	• Operating Device is installed after installing the Gate Leaf. • Wire Ropes connect the Operating Device to the Gate Leaf.
Electric Works	• Operation Control Equipment is installed after installing the Gate Leaf. • Electric Wiring pertaining to the Operation Control Equipment is connected through a Conduit.

We have established the executing plans for the installation of Rolling Gate, Study Case (II) by preparing installation flowchart (Fig. 7.2.2-1), installation procedure (Table 7.2.2-2), major equipment list (Table 7.2.2-3), installation step diagram (Fig. 7.2.2-2), construction schedule for 2-Lift (Table 7.2.2-4), and construction schedule for 3-Lift (Table 7.2.2-5), taking into consideration of the preconditions mentioned in Table 7.2.2-1.

Table 7.2.2-1 Installation Flow Chart, Rolling Gate, Study Case (II))

- Flow chart (Dry-dock Assembly in Panama & One-unit Installation in the Wet Condition)

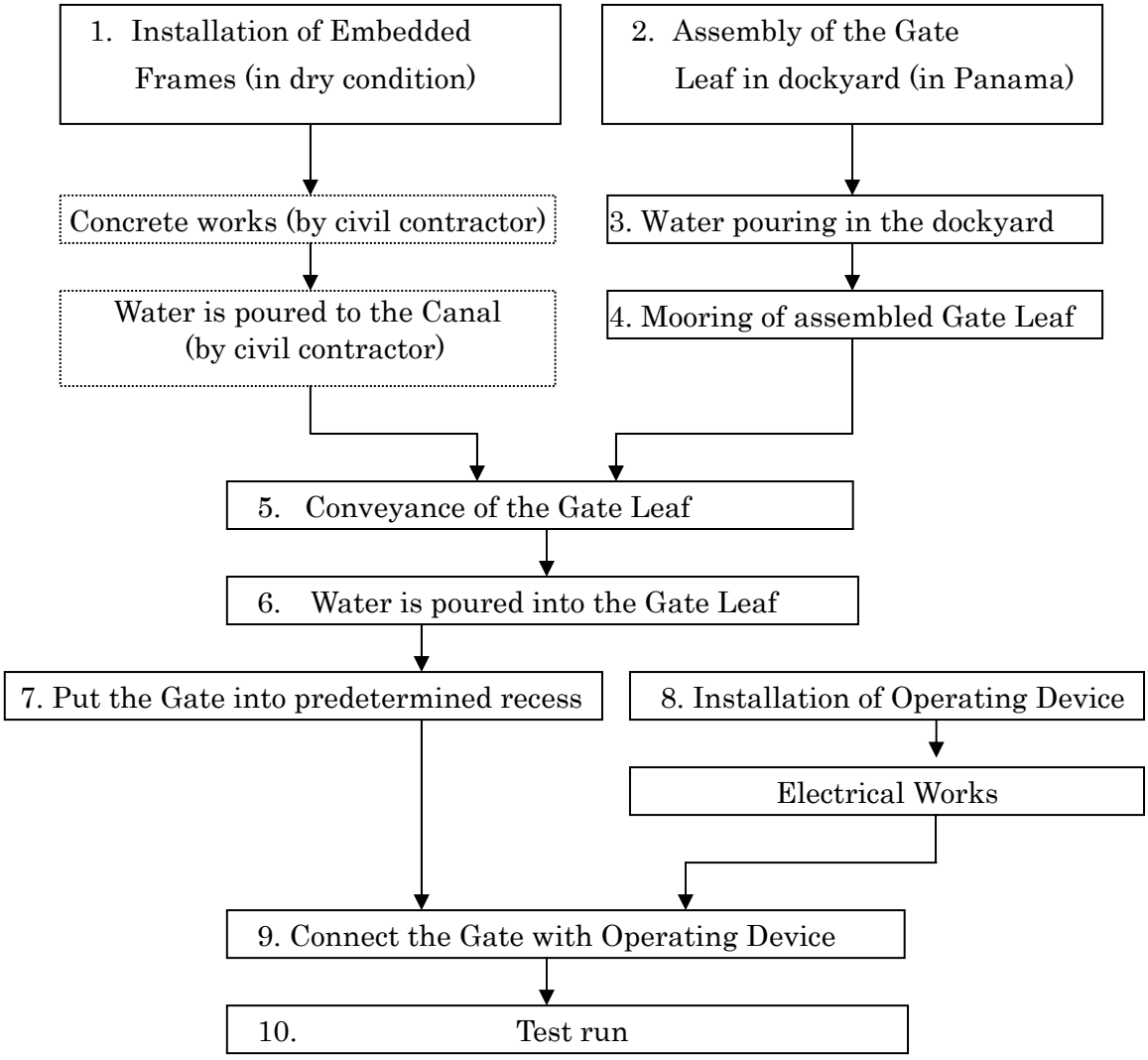

Table 7.2.2-2 Installation Procedure, Rolling Gate, Study Case (II)

1. Installation of Embedded Frames
   a. The Sill Beam is correctly installed in the blockout, and thereafter secondary concrete is placed by the civil contractor.
   b. The Embedded Side Frame is installed in the blockout, which is firmly fixed with Anchor Metals and supports to avoid displacement due to secondary concrete being placed by the civil contractor. The lift of concreting is appropriately determined by the civil contractor.

2. The Assembly of the Gate Leaf in Dockyard (in Panama)
   a. Gate Leaf is assembled, welded and integrated into one unit in a Panamanian dockyard.
   b. The inside of the dockyard is kept in the dry condition.

3. Water is poured in the dockyard.
   Water is collected in the dockyard.

4. Mooring of assembled Gate Leaf
   One-unit Gate Leaf is towed by tugboat and moored to the shore.

5. Conveyance of the Gate Leaf
   a. Water is poured to the Canal.
   b. Gate Leaf is towed to installation position by tugboats.

6. Water is poured into the Gate Leaf
   a. Water is put into the air chamber in the Gate Leaf.
   b. Water is put into the air chamber and the Gate Leaf is made into the right posture.
   c. Floating crane hangs and holds the Gate Leaf at the right posture.

7. Put the gate into predetermined recess
   a. The Gate Leaf hung and held by floating crane is carried into recess by the Operating Device.
   b. Stoplogs are dropped in the slot and water in the recess is drained.

8. Installation of the Operating Device & Electrical Works
   a. The Base Frame for the Operating Device is set to a predetermined position and fixed to Anchor Metals.
   b. The Operating Device is set to the Base Frame.
   c. Electrical Conduit is installed and fixed to support by band.
   d. Electrical Wires are led into Electrical Conduit and a Terminal is connected.
   e. Operation test of Electric Equipment is carried out.

9. Connect the Gate with Operating Device
   a. Upper and Lower Wagons are connected with the Gate Leaf.
   b. The Gate Leaf is connected with the Operating Device by Wire Ropes.
   c. The Operating Device is operated to store the Gate in the recess.

10. Test run
   A test run is made after completion of Gate Equipment installation.

Table 7.2.2-3 Major Equipment List, Rolling Gate Study Case (II)

NAME	CAPACITY	Q'TY	NOTE
Heavy Equipment			
Floating Crane	350 ton	1	
Mobile Crane	360 ton	2	
Mobile Crane	160 ton	2	
Mobile Crane	60 ton	1	
Operating System on Ship		1	
Truck		2	
Welding Machine		35	
Electric Power	600KVA	1 set	
Warehouse		As required	
Site Office		1	

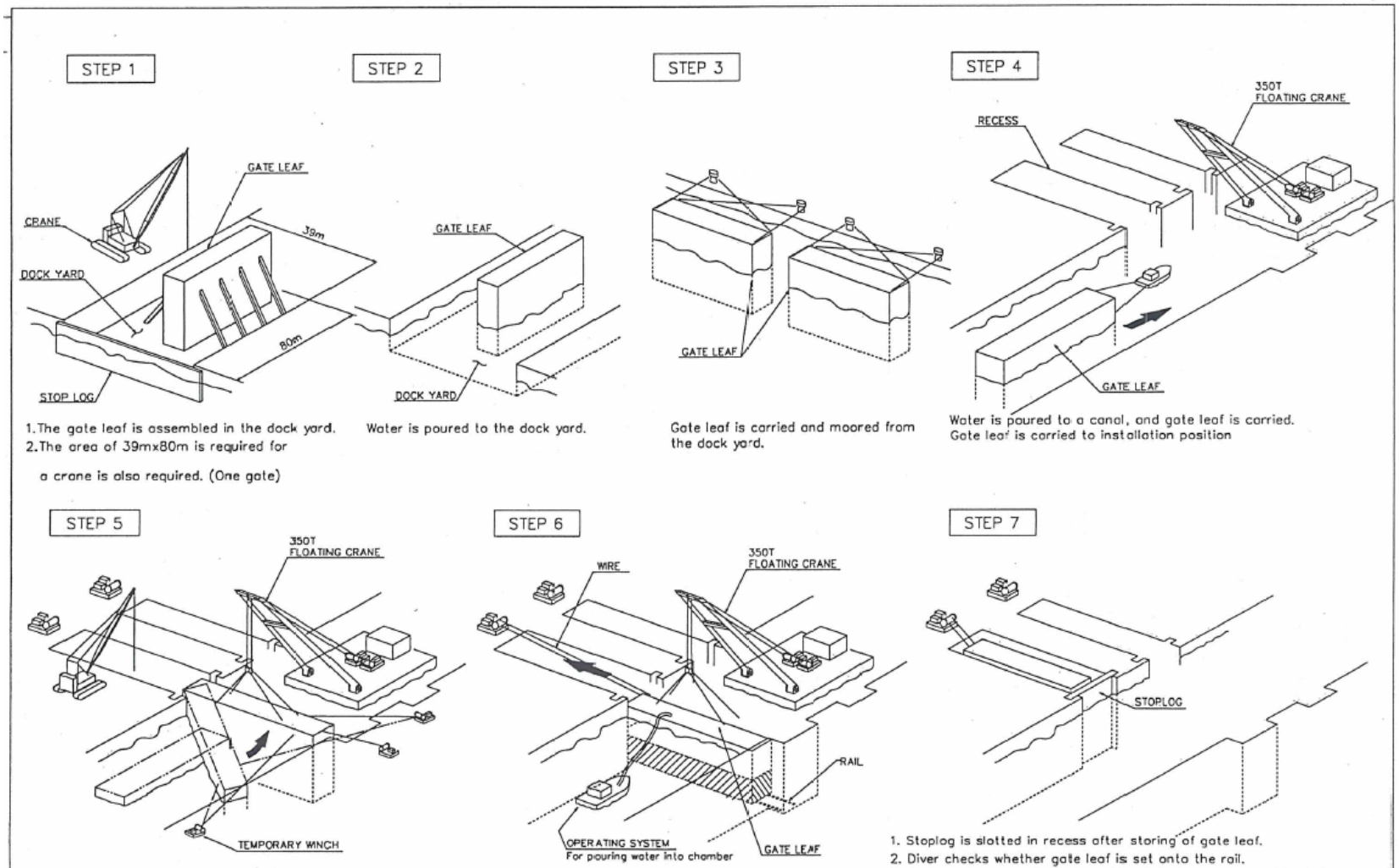

1. The gate leaf is assembled in the dock yard.
2. The area of 39mx80m is required for a crane is also required. (One gate)

Water is poured to the dock yard.

Gate leaf is carried and moored from the dock yard.

Water is poured to a canal, and gate leaf is carried. Gate leaf is carried to installation position

1. Installation of the operating device and electric wiring.
2. Beforehand, wagon is arranged in recess.
3. The direction of gate leaf is changed by temporary winches.

1. Gate leaf is put into recess by floating crane.
2. Gate leaf is connected to operating device with wire rope.
3. The operating device is operated and gate is stored in recess.

1. Stoplog is slotted in recess after storing of gate leaf.
2. Diver checks whether gate leaf is set onto the rail.
3. Drainage in recess is performed and it changes into a dry state.
4. The wagon of the upper and the bottom each is attached to gate leaf.

INSTALLATION STEP DIAGRAM, ROLLING GATE CASE(II)

Fig.7.2.2-2

Table 7.2.2.4Construction Schedule of Rolling Gate, 2-Lift

Study Case(II) WET, Block installation at Drydock for One Gate Leaf

		MONTH																	
		1	2	3	4	5	6	7	8	9	10	11	12		1	2	3	4	
SCHEDULE	[DRY DOCK ASSEMBLY]																		
	Preparation			Assembly															
				Welding															
	Paint									Gate									
	Launch																		
	[INSTALLATION]																		
	Operating device																		
	Electric wiring																		
	Paint																Operating device		
	Gate leaf																		
	Adjustment of gate & Operating device																		
MANPOWER																			man/day
	Engineer							3/da								3/da			1,090
	Foreman							5/day								3/day			1,640
	Ganger							10/day								5/day			3,190
	Iron worker							130/day								50/day			32,000
	Welder					35/day										5/day			7,255
	Painter										50/day						15/day		2,875
	Mechanic(Operating device)																10/day		250
	Electrician																15/day		375
	Diver											10/day					10/day		250
	Labourer					130/day					50/day					50/day			35,125
	TOTAL	7,390	7,825	7,825	7,825	7,825	7,825	7,825	7,825	5,390	2,950	2,450			2,900	2,900	3,900	1,395	84,050
MAJOR EQUIPMENT																			month/set
	Floating crane 350ton											1/day					1/day		1.0
	Mobile crane 360ton				2/day														8.0
	Mobile crane 160ton		2/day																6.0
	Mobile crane 60ton									1/day						1/day			7.5
	Welding machine						35/day					5/day				5/day			357.5
	Diver's equipment											As required					As required		1.0
	Truck						As required									As required			14.5
	Electric power						650KVA									100KVA			14.5
	Scaffolding						As required									As required			14.5

Table 7.2.2.5 Construction Schedule of Rolling Gate, 3-Lift

Study Case(II) WET, Block Installation at Drydock for One Gate Leaf

		MONTH																	
		1	2	3	4	5	6	7	8	9	10	11	12		1	2	3	4	
SCHEDULE	[DRY DOCK ASSEMBLY]																		
	Preparation			Assembly															
				Welding															
	Paint									Gate									
	Launch																		
	[INSTALLATION]																		
	Operating device																		
	Electric wiring																		
	Paint																Operating device		
	Gate leaf																		
	Adjustment of gate & Operating device																		
MANPOWER																			man/day
	Engineer							3/da								3/da			1,090
	Foreman							5/day								3/day			1,640
	Ganger							10/day								5/day			3,190
	Iron worker							130/day								50/day			32,000
	Welder					35/day										5/day			7,255
	Painter										50/day						15/day		2,875
	Mechanic(Hoist)																10/day		250
	Electrician																15/day		375
	Diver											10/day					10/day		250
	Labourer					130/day					50/day					50/day			35,125
	TOTAL	7,390	7,825	7,825	7,825	7,825	7,825	7,825	7,825	5,390	2,950	2,450			2,900	2,900	3,900	1,395	84,050
MAJOR EQUIPMENT																			month/set
	Floating crane 350ton											1/day					1/day		1.0
	Mobile crane 360ton				2/day														8.0
	Mobile crane 160ton		2/day																6.0
	Mobile crane 60ton									1/day						1/day			7.5
	Welding machine						35/day					5/day				5/day			357.5
	Diver's equipment											As required					As required		1.0
	Truck						As required									As required			14.5
	Electric power						650KVA									100KVA			14.5
	Scaffolding						As required									As required			14.5

7.2.3 Rolling Gate, study case (III)

The following preconditions have been established for the study of the installation method for Rolling Gate:

- Gate Leaf is fabricated outside Panama.
- Gate Leaf is fabricated as blocks being divided within the transport limit in Panama.
- The divided Gate Leaves are transported to the Port of Panama by vessels.
- The divided Gate Leaves are assembled in a concrete recess at site.
- The Gate Leaf is installed at a dry place.

In the following Table 7.2.3-1, we have summarized the preconditions established by our study for installing major component members of Rolling Gate of the Study Case (III).

Table 7.2.3-1 Preconditions for Installing Rolling Gate, Study Case (III)

Major Component Members of Rolling Gate	InstallationConditions
Embedded Frame	• Concreting for the Embedded Frame section is blocked out. The Embedded Frame is installed in the block-out after primary concreting is finished. • Embedded Frame is installed in a dry condition.
Gate Leaf	• Gate Leaf is installed under a dry condition after the Canal concrete works has been completed partially. • The lock wall and the bottom concrete slab at the lock head section are presumed to have been completed before starting Gate Leaf installation.
Operating Device	• Operating Device is installed after installing the Gate Leaf. • Wire Rope shall connect the Operating Device to the Gate Leaf.
Electrical Works	• Operation Control Equipment is installed after installing the Operating Device. • Electric wiring pertaining to the Operation Control Equipment is connected through a Conduit.

We have established the executing plans for the installation of Rolling Gate, Study Case (III) by preparing installation flowchart (Fig. 7.2.3-1), installation procedure (Table 7.2.3-2), major equipment list (Table 7.2.3-3), installation step diagram (Fig. 7.2.3-2), construction schedule for 2-Lift (Table 7.2.3-4), and construction schedule for 3-Lift (Table 7.2.3-5), taking into consideration of the preconditions mentioned in Table 7.2.3-1.

Fig. 7.2.3-1 Installation Flow Chart, Rolling Gate, Study Case (III)

- Flow Chart (Block Installation in the Dry Condition)

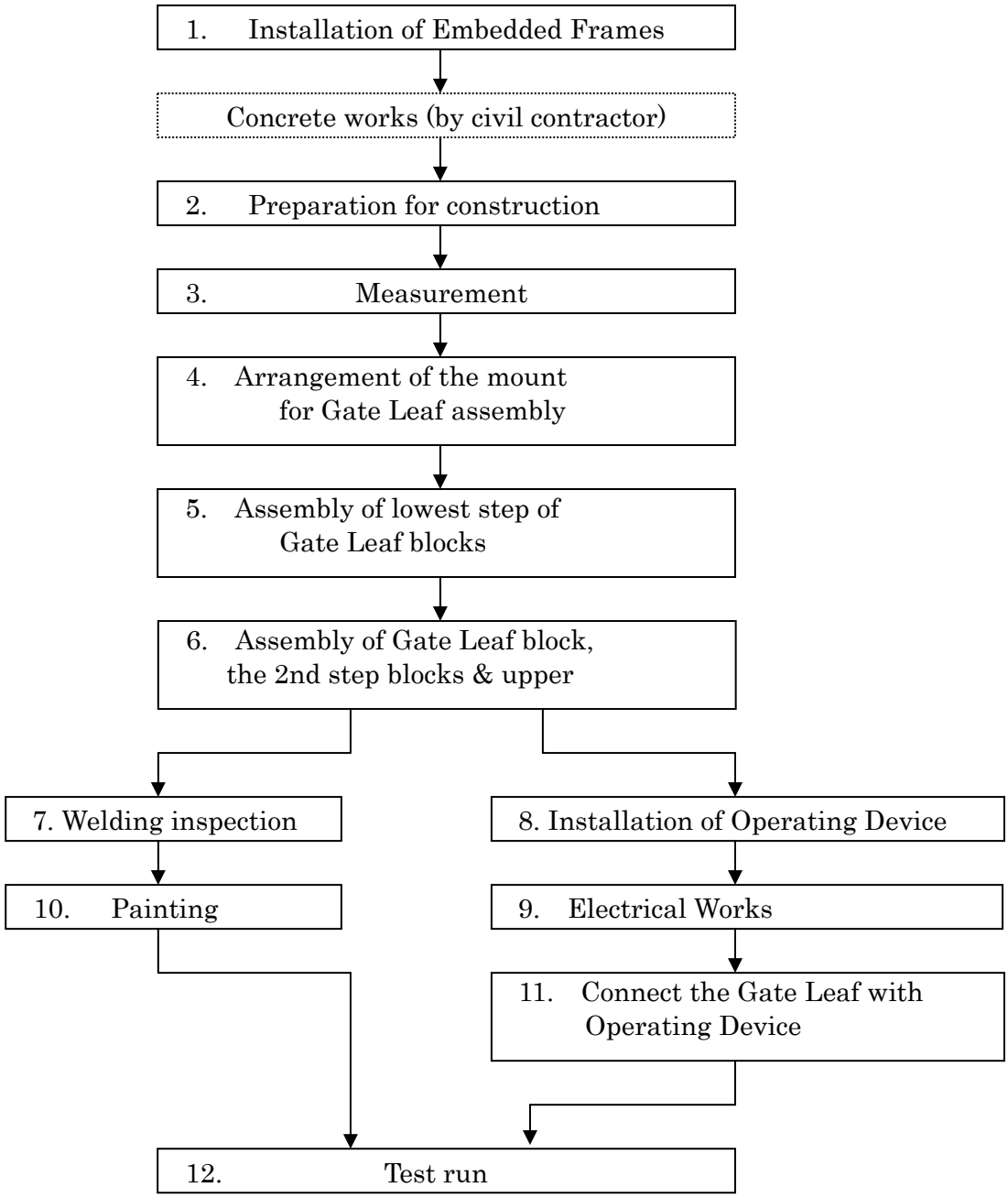

Table 7.2.3-2 Installation Procedure, Rolling Gate, Study Case (III)

1. Installation of Embedded Frames
   a. The Sill Beam is correctly installed in the blockout, and thereafter secondary concrete is placed by the civil contractor.
   b. The Embedded Side Frame is installed in the blockout, which is firmly fixed with Anchor Metals and Supports to avoid displacement due to secondary concrete being placed by the civil contractor. The lift of concreting is appropriately determined by the civil contractor.

2. Preparation for construction
   a. The approach road is made by the civil contractor for carrying in of the Gate components and mobile crane.
   b. The ground of working area for installation is prepared so that crane can operate.
   c. The space for a warehouse and equipment is secured.
   d. Transformer and electric power are secured.

3. Measurement
   a. The position for installing Embedded Frame is measured and marked by chalk on the primary concrete.
   b. Positions for installation of Gate and Operating Device are also measured and marked by chalk on the primary concrete.

4. Arrangement of the mount for Gate Leaf assemblies
   a. A steel mount of suitable height is made for supporting Gate.
   b. The supporting position by a mount is determined so as to avoid touching the rubber seals and the welded seams.
   c. A mount is of the construction which can be easily removed after finishing installation of Gate Leaf.

5. Assembly of lowest step of Gate Leaf blocks
   a. Since it becomes the standard of the whole Gate blocks, bottom Gate blocks are assembled correctly. The level and perpendicularity of the assembled blocks are checked.
   b. Assembly of Gate Leaf blocks is performed using the erection plates attached to them at the factory, and notch pins and bolts.
   c. After the assembly of Gate Leaf blocks, the level difference in the Leaf and the crevice in welded joints are checked.
   d. Temporary support is employed for the assembly of Gate Leaf blocks to prevent them from falling.

6. Assembly of Gate Leaf blocks, the 2nd step blocks and upper
   a. After setting temporary supports to the installed bottom Gate Leaf block, scaffolding is installed on the upstream and downstream sides of the bottom Gate block. Scaffolding is also provided inside of the bottom Gate Leaf block.
   b. After assembling the 2nd step of Gate Leaf block, the level difference and route gap of each welded part is checked and secured.
   c. The assembly of Gate Leaf blocks thereafter is performed by repeating the same cycle of method.

7. Welding inspection
   After completing site welding of Gate Leaf, the welded seams are checked by X-ray or UT inspection.

8. Installation of Operating Device
   a. The Base Frame for the Operating Device is set to a predetermined position and fixed to Anchor Metals.
   b. The Operating Device is set to the Base Frame.

9. Electrical Works
   a. Electrical Conduit is installed and fixed to support by Band.
   b. Electrical Wires is led into Electrical Conduit and a Terminal is connected.
   c. Operation test of Electric Equipment is carried out.

10. Painting
    a. Painting is performed according to the contract specification.
    b. Standard painting system consists of base coating, middle coating, and top coating.
    c. Painting is inspected after completion, based upon contract specification.

11. Connect the Gate Leaf with the Operating Device
    a. Upper and lower Wagons is connected with the Gate Leaf.
    b. The Gate Leaf is connected with the Operating Device by Wire Ropes.
    c. The Operating Device is operated to store the Gate in the recess.

12. Test run
    a. A test run is made after completion of gate equipment installation.
    b. Temporary supports, etc. are removed before a test run.

Table 7.2.3-3 Major Equipment List, Miter Gate, Study Case (III)

NAME	CAPACITY	Q'TY	NOTE
Heavy Equipment		1	
Floating Crane	350 ton	1	
Mobile Crane	360 ton	2	
Mobile Crane	160 ton	2	
Mobile Crane	60 ton	1	
Operating System on Ship		1	
Truck		2	
Welding Machine		35	
Electric Power	600KVA	1 set	
Warehouse		As required	
Site Office		1	

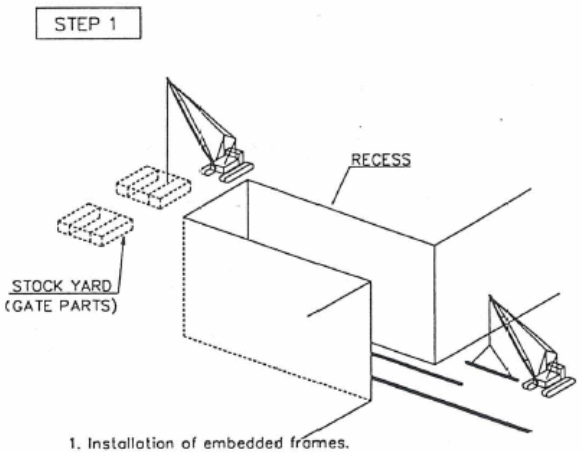

1. Installation of embedded frames.

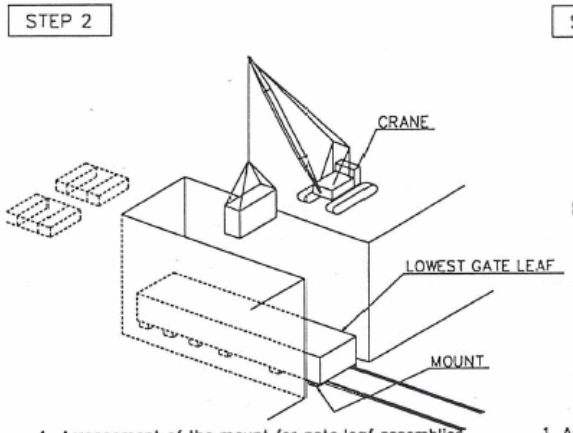

1. Arrangement of the mount for gate leaf assemblies.
2. Assembly of lowest gate leaf blocks.

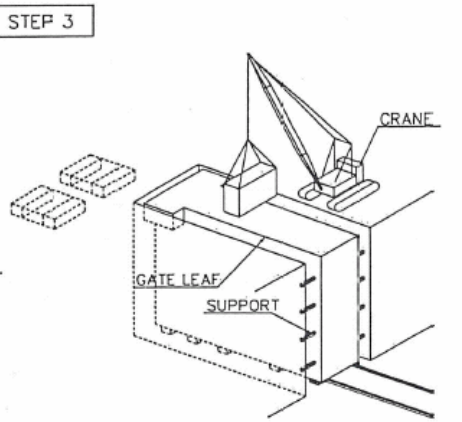

1. Assembly of gate leaf blocks, 2nd step blocks and upper.
2. Welding and welding inspection.

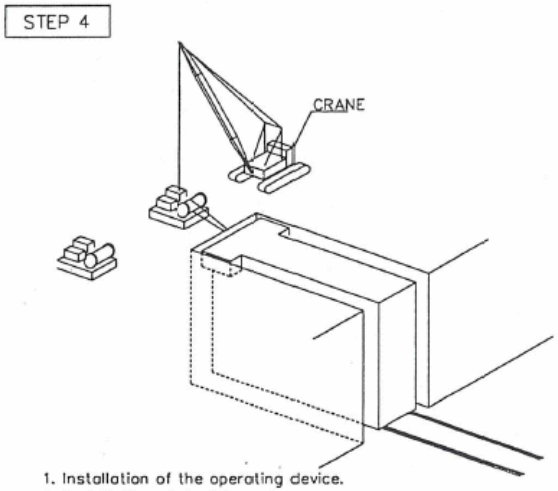

1. Installation of the operating device.
2. Installation of electric works.
2. Painting

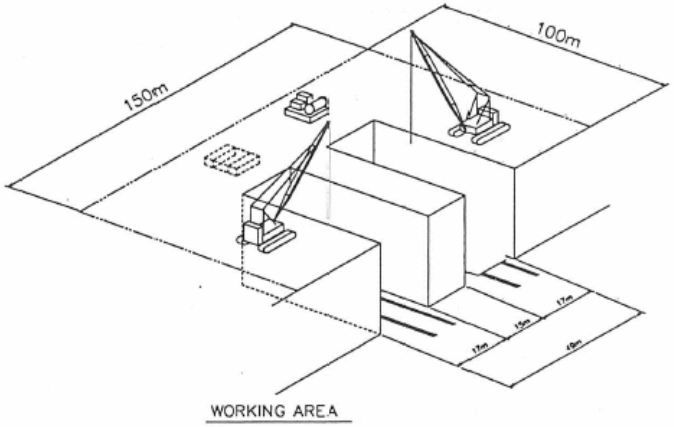

Working area is 150m×100m for installation of two gates.

INSTALLATION STEP DIAGRAM, ROLLING GATE CASE(III)

Fig.7.2.3–2

Table 7.2.3.4 Construction Schedule of Rolling Gate, 2-Lift

Study Cace(III) DRY, Block Installation at Site for One Gate Leaf

		MONTH												
		1	2	3	4	5	6	7	8	9	10	11	12	
SCHEDULE														
	Gate leaf				INSTALL									
					WELDING									
	Operating device													
	Electric wiring													
	Paint										GATE	OPERATING DEVICE		
	Adjustment of gate & Operating device													
MANPOWER														man/day
	Engineer						3/day							900
	Foreman						5/day							1,500
	Ganger						10/day							3,000
	Iron worker						130/day				50/day			32,000
	Welder				35/day						5/day			7,255
	Painter										50/day	15/day		2,875
	Mechanic(Operating device)											10/day		250
	Electrician											15/day		375
	Labourer					130/day					50/day			32,000
	TOTAL	7,390	7,825	7,825	7,825	7,825	7,825	7,825	7,825	6,075	4,325	4,140	3,450	80,155
MAJOR EQUIPMENT														month/set
	Mobile crane 360ton				2/day									9.0
	Mobile crane 160ton		2/day											5.0
	Mobile crane 60ton										1/day			4.5
	Welding machine				35/day						5/day			312.5
	Electric power				650KVA									11.5
	Truck				As required									11.5
	Scaffolding				As required									11.5

Table 7.2.3.5 Construction Schedule of Rolling Gate, 3-Lift

Study Case(III) DRY, Block Installation at Site for One Gate Leaf

		MONTH												
		1	2	3	4	5	6	7	8	9	10	11	12	
SCHEDULE														
	Gate leaf	INSTALL												
		WELDING												
	Operating device													
	Electric wiring													
	Paint									GATE		OPERATING DEVICE		
	Adjustment of gate & Operating device													
MANPOWER														man/day
	Engineer	3/day												900
	Foreman	5/day												1,500
	Ganger	10/day												3,000
	Iron worker	130/day									50/day			32,000
	Welder			35/day							5/day			7,255
	Painter										50/day	15/day		2,875
	Mechanic(Hoist)											10/day		250
	Electrician											15/day		375
	Labourer	130/day									50/day			32,000
	TOTAL	7,390	7,825	7,825	7,825	7,825	7,825	7,825	7,825	6,075	4,325	4,140	3,450	80,155
MAJOR EQUIPMENT														month/set
	Mobile crane 360ton			2/day										9.0
	Mobile crane 160ton	2/day												5.0
	Mobile crane 60ton								1/day					4.5
	Welding machine	35/day									5/day			312.5
	Electric power	650KVA												11.5
	Truck	As required												11.5
	Scaffolding	As required												11.5

7.3 Manpower and Major Equipment

7.3.1 Manpower for Installation

The results of totaling of manpower estimated for installing Miter Gate and Rolling Gate are shown in Table 7.3.1 and Table 7.3.1, respectively. The manpower shows the total number of workers when all Gates are installed in each case.

The manpower is estimated under the following preconditions:

- Miter Gate;
  The manpower to be required for installing a single unit of Gate Leaf is calculated on the supposition of unit weight of Gate Leaf being set at 2,988 tons. The manpower for installing all the 2- and 3-lift Gate Leaves is calculated on the manpower required for respective unit weights.
  The total weight of all 2-lift Gate Leaves is assumed to be 16,792 tons, while that of all 3-lift Gate Leaves assumed to be 22,528 tons.

- Rolling Gate;
  The manpower to be required for installing a single unit of Gate Leaf is calculated on the supposition of unit weight of Gate Leaf being set at 4,580 tons. The manpower for installing all the 2- and 3-lift Gate Leaves has been calculated on the manpower required for respective unit weights.
  The total weight of all 2-lift Gate Leaves is assumed to be 20,570 tons, while that of all 3-lift Gate Leaves assumed to be 22,250 tons.

Table 7.3.1 Summary of Manpower in Cases of 2-Lift Gate Leaves

2-LIFT	Miter Gate			Rolling Gate		
	Case (I)	Case (II)	Case (III)	Case (I)	Case (II)	Case (III)
Manpower						(Unit: man-day)
Engineer	1489	5283	4215	1190	4895	4042
Foreman	1489	7812	7025	1190	7366	6737
Ganger	2473	15117	14050	1976	14327	13474
Iron Worker	24587	125041	125041	19649	143721	143721
Welder	1405	30909	30909	1123	32584	32584
Painter	2107	16157	16157	1684	12912	12912
Mechanic (op. device)	-	-	-	1123	1123	1123
Electrician	2107	2107	2107	1684	1684	1684
Diver	702	1405	-	561	1123	-
Pipe fitter (hydraulic)	2107	2107	2107	-	-	-
Laborer	24587	142603	125041	19649	157756	143721
Total of workers	63054	348541	326652	49831	377491	359997
No. of workers per ton	3.8	20.8	19.5	2.5	18.4	17.6

Table 7.3.2 Summary of Manpower in Cases of 3-Lift Gate Leaves

3-LIFT	Miter Gate			Rolling Gate		
	Case (I)	Case (II)	Case (III)	Case (I)	Case (II)	Case(III)
Manpower	(Unit: man-day)					
Engineer	1998	7087	5655	1287	5295	4372
Foreman	1998	10480	9424	1287	7967	7287
Ganger	3317	20281	18849	2138	15497	14574
Iron Worker	32985	167754	167754	21254	155459	155459
Welder	1885	41467	41467	1215	35245	35245
Painter	2827	21676	21676	1822	13967	13967
Mechanic (op. device)	-	-	-	1215	1215	1215
Electrician	2827	2827	2827	1822	1822	1822
Diver	942	1885	-	607	1215	-
Pipe fitter (hydraulic)	2827	2827	2827	-	-	-
Laborer	32985	191315	167754	21254	170640	155459
Total of workers	84593	467599	438233	53900	408322	389399
No. of workers per ton	3.8	20.8	19.5	2.5	18.4	17.6

Note: The manpower in the above Tables 7.3.1 and 7.3.2 shows the numbers of Panamanian workers estimated on the Survey Team's in-house data gathered in the international project experience.

7.3.2 Major Equipment for Installation

The results of totaling of heavy equipment quantities estimated as required for 2-Lift type and 3-Lift type of Miter Gate and Rolling Gate are shown in Table 7.3.3 and Table 7.3.4, respectively. Each total shows the total quantities of the heavy equipment when all gates are executed in each case.

The heavy equipment is studied under the following preconditions:

- Miter Gate;
  The heavy equipment to be required for installing a single unit of Gate Leaf has been calculated on the supposition of unit weight of Gate Leaf being set at 2,988 tons. The quantities of heavy equipment for installing all the 2- and 3-lift Gate Leaves are calculated on the quantities of heavy equipment required for the respective unit weights.
  The total weight of all 2-lift Gate Leaves is assumed to be 16,792 tons, while that of all 3-lift Gate Leaves assumed to be 22,528 tons.

- Rolling Gate;
  The heavy equipment to be required for installing a single unit of Gate Leaf is calculated on the supposition of unit weight of Gate Leaf being set at 4,580 tons. The quantities of heavy equipment for installing all the 2- and 3-lift Gate Leaves have been calculated on the quantities of heavy equipment required for the respective unit weights.
  The total weight of all 2-lift Gate Leaves is assumed to be 20,570 tons, while that of all 3-lift Gate Leaves assumed to be 22,250 tons.

Table 7.3.3 Summary of Heavy Equipment in Cases of 2-Lift Gate Leaves

2-LIFT	Miter Gate			Rolling Gate		
	Case (I)	Case (II)	Case (III)	Case (I)	Case (II)	Case (III)
Major equipment	(Unit: month/set)					
Floating Crane, 350ton	3	6	-	2	4	-
Mobile Crane, 60ton	14	25	31	16	34	20
Mobile Crane, 160ton	-	42	22	-	27	22
Mobile Crane, 360ton	-	28	39	-	36	40
Operating System	3	6	-	2	4	-
Welding Machine	98	1,447	1,461	79	1,606	1,404
Diver's Equipment	3	6	-	2	4	-
Truck	20	70	56	16	65	52
Electric Power	20	70	56	16	65	52
Scaffolding	-	70	56	-	65	52

Table 7.3.4 Summary of Major Equipment in Study Cases of 3-Lift

3-LIFT	Miter Gate			Rolling Gate		
	Case (I)	Case (II)	Case (III)	Case (I)	Case (II)	Case (III)
Major equipment	(Unit: month/set)					
Floating Crane, 350ton	4	8	-	2	5	-
Mobile Crane, 60ton	19	34	41	17	36	22
Mobile Crane, 160ton	-	57	30	-	29	24
Mobile Crane, 360ton	-	38	53	-	39	44
Operating System	4	8	-	2	5	-
Welding Machine	132	1,941	1,960	85	1,737	1,518
Diver's Equipment	4	8	-	2	5	-
Truck	26	94	75	17	70	56
Electric Power	26	94	75	17	70	56
Scaffolding	-	94	75	17	70	56

7.4 Assembling Method of Gate Leaf in Dry Dock in Panama

The execution steps for fabricating the Gate Leaves outside Panama, transporting them into Panama by using a vessel, and assembling them in Panama are outlined in the Miter Gate, Study Case (II) and Rolling Gate, Study Case (II).

This section describes the assembling methods of the Gate Leaves in a dry dock in Panama for the Miter Gate and Rolling Gate.

7.4.1 Assembling Method of Miter Gate in a Dry Dock in Panama

As a result of confirming the functions of the Gate Leaves expected by the concept design, it is considered to be the best way to assemble them in a condition of skin plates laid down flat in a dry dock. Fig.7.4.1 shows the assembled condition of the Miter Gate, and Table 7.4.1 shows the concept design of height of gates in the Post-Panamax Locks.

Since the passable dimensions in the present Panama Canal is 32.3m in width and 12.0m in draft, the 2-lift Miter Gate cannot be transported from the Pacific Ocean side to the Atlantic Ocean side by towing it through the present Panama Canal. The dimensions of the 2-lift Miter Gate are 22.34～34.5m wide and 22.34～36.5m high. Accordingly, a dry dock that can assemble the Miter Gate becomes necessary on the Atlantic Ocean side for 2-lift Miter Gate Study Case (II).

The 2-lift Miter Gates, M2d and M3d having the width of 34.5m cannot be assembled at the dry dock on the Pacific Ocean side possessed by Braswell Shipyard because they exceed the width of the entrance to their dry dock.

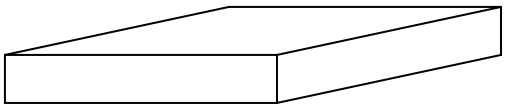

Fig.7.4.1 Assembled Condition of Miter Gate

Table 7.4.1 Concept Design of Height of Gates in the Post-Panamax Locks

	Atlantic		Pacific	
	Miter Gate		Rolling Gate	
Height of Gates	2-Lift	3-Lift	2-Lift	3-Lift
#1 36.50m			2	
#2 35.49m			2	
#3 31.70m				2
#4 30.50m		6		4
#5 34.50m	4			
#6 22.70m			2	2
#7 22.34m	2	2		

Table 7.4.2 shows the profile of the dry dock being possessed on the Atlantic Ocean side by ACP Industrial Shipyard.

Table 7.4.2 Profile of the Dry Dock being Possessed on the Atlantic Ocean Side by ACP Industrial Shipyard

Dock Dimensions				
Dock No.	Size	Entrance	Maximum Draft	Keel Block Height
-	114m×17.0m	unknown	6.0m*	unknown

Since the dry dock being possessed by ACP Industrial Shipyard is 17m in width, the Miter Gate cannot be assembled there in the laid down condition.
ACP Industrial Shipyard is now planning to extend the dock yard on the assumption of Post-Panamax Locks, and we prepared an outlined assembly drawing for the Miter Gate assuming that the extended dock yard is employed.
See Fig.7.4.2. Miter Gate Fabrication of Gate Leaf in Dock Yard.

The preconditions for assembling the Miter Gate are as shown below.

- Gate Leaf is fabricated outside Panama.
- Gate Leaf is fabricated as blocks being divided within the transport limit in Panama.
- The block-divided Gate Leaves are transported to a Panamanian port on the Atlantic Ocean side by a vessel.
- After landing at the Panamanian port on the Atlantic Ocean side, the blocks of Gate Leaves are land transported to ACP Industrial Shipyard by trucks.
- The blocks of Gate Leaves are assembled and integrated into one unit in ACP Industrial Shipyard and the integrated Gate Leaf is installed at site. The Gate Leaves are assembled in a laid down condition in ACP Industrial Shipyard.
- The Gate Leaf is installed under the wet condition after the end of Canal concrete works.

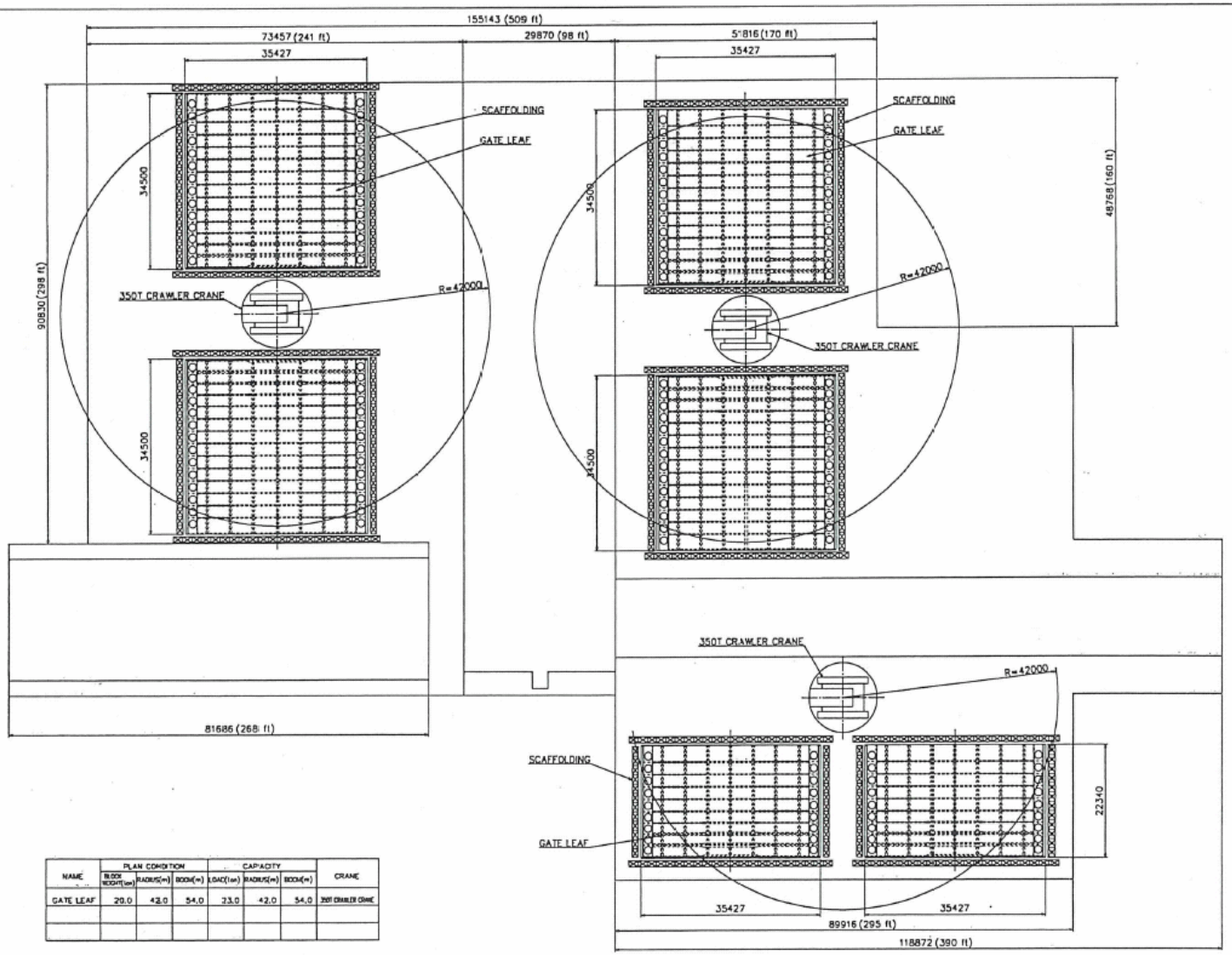

NAME	PLAN CONDITION			CAPACITY			CRANE
	BLOCK WEIGHT(ton)	RADIUS(m)	BOOM(m)	LOAD(ton)	RADIUS(m)	BOOM(m)	
GATE LEAF	20.0	42.0	54.0	23.0	42.0	54.0	350T CRAWLER CRANE

MITER GATE: FABRICATION OF GATE LEAF IN DOCK YARD
Fig.7.4.2

7.4.2 Assembling Method of Rolling Gate in a Dry Dock in Panama

As a result of confirming the functions of the Gate Leaves expected by the concept design, it is considered to be the best way to assemble the Rolling Gate under the working condition or erected condition in a dry dock. Fig.7.4.3 shows the assembled condition of the Rolling Gate, and Table 7.4.3 shows the necessary draft presumable for the Rolling Gate.

Since the passable dimensions in the present Panama Canal is 32.3m in width and 12.0m in draft, the Rolling Gate cannot be transported from the Pacific Ocean side to the Atlantic Ocean side by towing it through the present Panama Canal. Accordingly, a dry dock that can assemble the Rolling Gate becomes necessary on the Atlantic Ocean side for Rolling Gate study case (II).

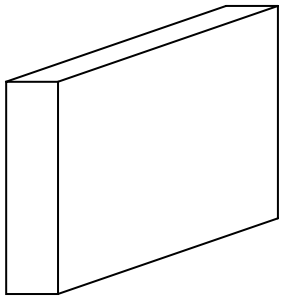

Fig.7.4.3 Assembled Condition of Rolling Gate

Table 7.4.3 Presumable Necessary Draft for Rolling Gate

	Pacific Rolling Gate		Presumable Necessary Draft
Height of Gates	2-Lift	3-Lift	
36.50m	2		15.4m
35.49m	2		16.0m
31.70m		2	17.1m
30.50m		4	16.3m
22.70m	2		14.3m
22.70m		2	13.9m

We prepare an outlined assembly drawing for the Gate Leaf assuming that the dry dock being possessed by Braswell Shipyard located on the Pacific Ocean side in Panama is used.

The preconditions for assembling the Rolling Gate are as shown below.

- Gate Leaf is fabricated outside Panama.
- Gate Leaf is fabricated as blocks being divided within the transport limit in Panama.
- The divided Gate Leaves are transported to a Panamanian port on the Pacific Ocean side by a vessel.

- After landing at the Panamanian port on the Pacific Ocean side, the blocks of Gate Leaves are land transported to Braswell Shipyard by truck.
- The blocks of Gate Leaves are assembled and integrated into one unit in the dry dock of Braswell Shipyard, and the integrated Gate Leaf is installed at site. The Gate Leaves are assembled in the dry dock of Braswell Shipyard under the same condition as in the working condition of the Rolling Gate.
- The Gate Leaf is installed under the wet condition after the end of Canal concrete works.

Table 7.4.4 shows the profile of the dry dock being possessed on the Pacific Ocean side by Braswell Shipyard (Extracted from Braswell Shipyard's pamphlet).

Table 7.4.4 Profile of the Dry Dock being Possessed on the Pacific Ocean Side by Braswell Shipyard

Dock Dimensions				
Dock No.	**Size**	**Entrance**	**Maximum Draft**	**Keel Block Height**
1	318m×39.0m	33.6m	7.9m*	1.75m
2	130m×30.5m	25.9m	6.4m**	1.75m
3	70m×16.8m	16.8m	4.3m**	1.46m

* maximum draft at low tide
** maximum draft at high tide
Note: (1) Vessel has to enter dry dock 2 or 3 at high tide.
(2) Tide changes 4.57m every 6 hours.

Since the profile of dock No. l is the largest out of the dry docks shown in Table 7.4.4, we prepare an outline drawing for assembling the Gate Leaf assuming that No. 1 dock is used. See Fig. 7.4.4 Rolling Gate: Fabrication of Gate Leaf in Dock Yard.

Since the maximum draft of dock No.1 in Table 7.4.4 shows the low tide, we inquired of Braswell Shipyard about the maximum draft at the spring tide, and received a reply of 50 feet (approx. 15.2m). Table 7.4.3 shows the necessary draft for the Rolling Gate presumable from the concept design.
Accordingly, present dry dock No. 1 of Braswell Shipyard is shallower than the necessary draft shown in Table 7.4.3. If study case (II) of the Rolling Gate is adopted, the draft of the concept design must be set to be shallow.

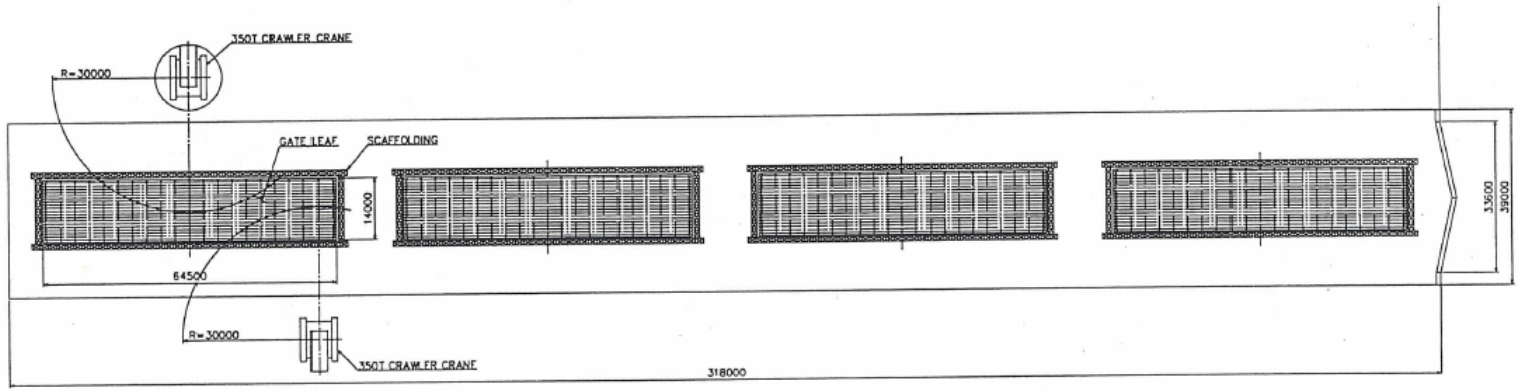

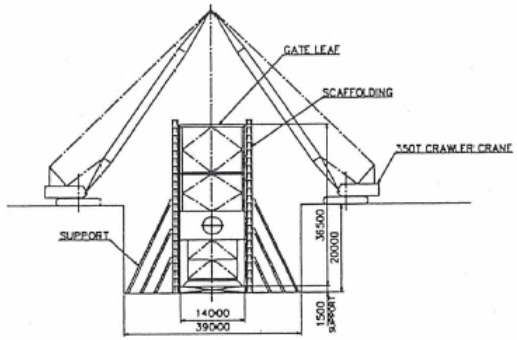

NAME	PLAN CONDITION			CAPACITY			CRANE
	BLOCK WEIGHT(ton)	RADIUS(m)	BOOM(m)	LOAD(ton)	RADIUS(m)	BOOM(m)	
GATE LEAF	25.0	30.0	54.0	37.5	30.0	54.0	350T CRAWLER CRANE

ROLLING GATE: FABRICATION OF GATE LEAF IN DOCK YARD

Fig.7.4.4

7.5 Evaluation summary of study of installation methods

Table 7.5.1 shows the features of methods, establishment conditions of methods, and suggestions on the Miter Gate and Rolling Gate as the summary of installation methods based on the study results described above.

Table 7.5.1 Evaluation of Installation Methods

	Features of Methods	Establishment Conditions of Methods and Suggestions	No. of Installation Workers per ton of Product Weight	Evaluation on Installation Work	Evaluation
MiterGate Study Case (I) Wet	• Since one unit fabrication of gate is done in fabrication shop, the installation work time at site is short as compared with the installation work time in study cases (II) and (III). • Gate is installed under the wet condition of the Canal. • A titan floating crane is used for installation at site. • Watertight adjustment must be done under a wet condition after installing the gate.	• Detailed stability calculation is necessary for towing the Gate Leaf. • Detailed stability calculation is necessary for installing the Gate Leaf.	3.8 persons/ton	No noticeable problem is present	A
Miter Gate Study Case (II) Wet	• Gate Leaf assembling work in dry dock in Panama and installation work at site occur. • Outdoor assembling is affected by weather. • Gate is installed under the wet condition of the Canal. • A titan floating crane is used for installation at site. • Watertight adjustment must be done under a wet condition after installing the gate.	• Detailed stability calculation is necessary for towing the Gate Leaf. • Detailed stability calculation is necessary for installing the Gate Leaf. • A space for assembling the Miter Gate must be secured, since a dry dock for assembling the Miter Gate is not present on the Atlantic Ocean side. • When ACP Industrial Shipyard is used for assembling the Miter Gate, the synchrolift capacity must be increased to be more than 3,000 tons from the present capacity of 1,200 tons. • If ACP Industrial Shipyard is not used for assembling the Miter Gate, a launching device for Miter Gate or a floating crane having a big hoisting capacity becomes necessary.	20.8 persons/ton	If the assembly space for the Gate Leaf cannot be secured, this plan cannot be adopted. At Braswell's dry dock, the 2-lift Gate Leaf MD2 and MD3d cannot be assembled due to the excessive width of the Gate Leaf.	C
Miter Gate Study Case (III) Dry	• Installation work at site requires time schedule adjustment with such other works as Canal concrete works, etc. • Outdoor assembling is affected by weather. • Gate is installed under a dry condition before water filling to the Canal. • Watertight adjustment can be done under a dry condition after installing the gate.	• A space for assembling the Gate Leaf and a space for installing a crane are necessary at the installation place of the Gate Leaf. • Time schedule adjustment with the Canal concrete works and other related work becomes necessary for installing the Gate Leaf at site.	19.5 persons/ton	No noticeable problem is present.	A
Rolling Gate Study Case (I) Wet	• Since one-unit fabrication of gate is done in fabrication shop, the installation work time at site is shorter as compared with the installation work time in study cases (II) and (III). • Gate is installed under the wet condition of the Canal. • Watertight adjustment must be done under a wet condition after installing the gate.	• Review is necessary to the conceptual design of the draft for the Gate Leaf to make it to be 10m. • Detailed stability calculation is necessary for towing the Gate Leaf. • Detailed stability calculation is necessary for installing the Gate Leaf.	2.5 person/ton	No noticeable problem is present in installation.	A
Rolling Gate Study Case (II) Wet	• Gate Leaf assembly work in dry dock in Panama and installation work at site occur. • Outdoor assembling is affected by weather. • Gate is installed under the wet condition of the Canal. • Watertight adjustment must be done under a wet condition after installing the gate.	• Detailed stability calculation is necessary for towing the Gate Leaf. • Detailed stability calculation is necessary for installing the Gate Leaf. • A yard for assembling the Rolling Gate must be secured on the Pacific Ocean side. • When the dry dock of Braswell Shipyard is used for assembling the Rolling Gate, the draft of the Rolling Gate must be set to be 15m or shallower. • If the dry dock of Braswell Shipyard is not used for assembling the Rolling Gate, a launching device of Rolling Gate or a floating crane having a big hoisting capacity becomes necessary.	18.4 persons/ton	If the assembly space for the Gate Leaf cannot be secured, this plan cannot be adopted. Gate Leaf cannot be assembled at Braswell Shipyard due to the shallow draft of their dock yard.	C
Rolling Gate Study Case (III) Dry	• Installation work at site requires time schedule adjustment with such other works as Canal concrete works, etc. • Outdoor assembling is affected by weather. • Gate is installed under a dry condition before water filling to the Canal. • Watertight adjustment can be done under a dry condition after installing the gate.	• A space for assembling the Gate Leaf and a space for installing a crane are necessary at the installation place of the Gate Leaf. • Time schedule adjustment with the Canal concrete works and other related work becomes necessary for installing the Gate Leaf at site.	17.6 persons/ton	No noticeable problem is present.	A

Evaluation criteria: A: Executable; B: Executable with serious conditions; C: Not executable

8. Technical Evaluation of Miter Gate and Rolling Gate

Chapter 8 Summary of Evaluation on Study Cases

8.1 Evaluation of Fabrication, Transportation, and Installation Methods

Table 8.1-1 and 2 show the summary of the evaluation results in Chapters 5, 6 and 7.

We define the overall evaluation of the fabrication, transportation, and installation as technical evaluation for the purpose of distinguishing it from the "Cost evaluation" and "Evaluation of construction period" described later.

We adopted the lowest evaluation out of each evaluation of fabrication, transportation, and installation as the technical evaluation.

For the technical evaluation results, refer to Table 8.1-1 and 8.1-2.

Table 8.1-1 Technical Evaluation of Study Cases for Miter Gate

Study Cases				Fabrication	Transportation	Installation	Technical Evaluation
2-Lift	Study Case (I)	One-unit Fabrication, Transportation, Installation	Wet	B	B	A	B
	Study Case (II)	Block Fabrication, Transportation, Dry Dock Assembly, One-unit Towing, Installation	Wet	A	A	C	C
	Study Case (III)	Block Fabrication, Transportation, Installation	Dry	A	A	A	A
3-Lift	Study Case (I)	One-unit Fabrication, Transportation, Installation	Wet	B	B	A	B
	Study Case (II)	Block Fabrication, Transportation, Dry Dock Assembly, One-unit Towing, Installation	Wet	A	A	C	C
	Study Case (III)	Block Fabrication, Transportation, Installation	Dry	A	A	A	A

Evaluation standard A: Executable B: Executable with serious conditions attached

C: Not executable

Note: Miter gate

Study case (II) cannot be fabricated because of a narrow inlet width of the dry dock of Braswell Shipyard.

Study case (I) and (III) are executable without any problem.

Table 8.1-2 Technical Evaluation of Study Cases for Rolling Gate

Study Cases				Fabrication	Transportation	Installation	Technical Evaluation
2-Lift	Study Case (I)	One-unit Fabrication, Transportation, Installation	Wet	B	B	A	B
	Study Case (II)	Block Fabrication, Transportation, Dry Dock Assembly, One-unit Towing, Installation	Wet	A	A	C	C
	Study Case (III)	Block Fabrication, Transportation, Installation	Dry	A	A	A	A
3-Lift	Study Case (I)	One-unit Fabrication, Transportation, Installation	Wet	B	B	A	B
	Study Case (II)	Block Fabrication, Transportation, Dry Dock Assembly, One-unit Towing, Installation	Wet	A	A	C	C
	Study Case (III)	Block Fabrication, Transportation, Installation	Dry	A	A	A	A

Evaluation standard A: Executable B: Executable with serious conditions attached
C: Not executable

Note: Rolling gate

For executing the work, the draft of the rolling gate comes into question.

Study case (I) cannot be adopted because the rolling gate draft is more than 14m to cause the unloading from a semi-submergible vessel to be impossible.

However, it may be adopted by reviewing the loading method inclusive of an extensive design change of the rolling gate or by adopting the unloading using a large floating crane.

Study case (II) cannot be adopted due to the limited draft of Braswell Shipyard.

Study case (III) is executable without any problem.

For executing the rolling gate under the wet condition, the design in Section.7.2.1 must be reviewed.

8.2 Construction Schedule

We will describe the time schedule and required capabilities assuming that the canal construction period is limited to 6 years (72 months).

We will also describe the possibility of adopting makers based on this time schedule and capabilities. Since the embedded frames, hoisting devices, and control system are almost equivalent to each other in all cases, we will carry out this study about the gate leaf only.

We will review the construction period including the civil engineering time schedule. For the civil engineering time schedule, we referred to the entire time schedule received at the first field survey. For the internal work in Panama shown in Study Cases (II) and (III), we have prepared the construction schedule referring to the maker survey results received in the first field survey.

8.2.1 Miter gate

Tables 8.2.1-1 ~ 6 show the construction schedules based on the study results obtained in Chapters 5, 6, and 7.

Fig.8.2.1-1 shows a graph of the design, fabrication, transportation, and installation schedules per gate, and Fig.8.2.1-2 shows a graph of the total schedule.

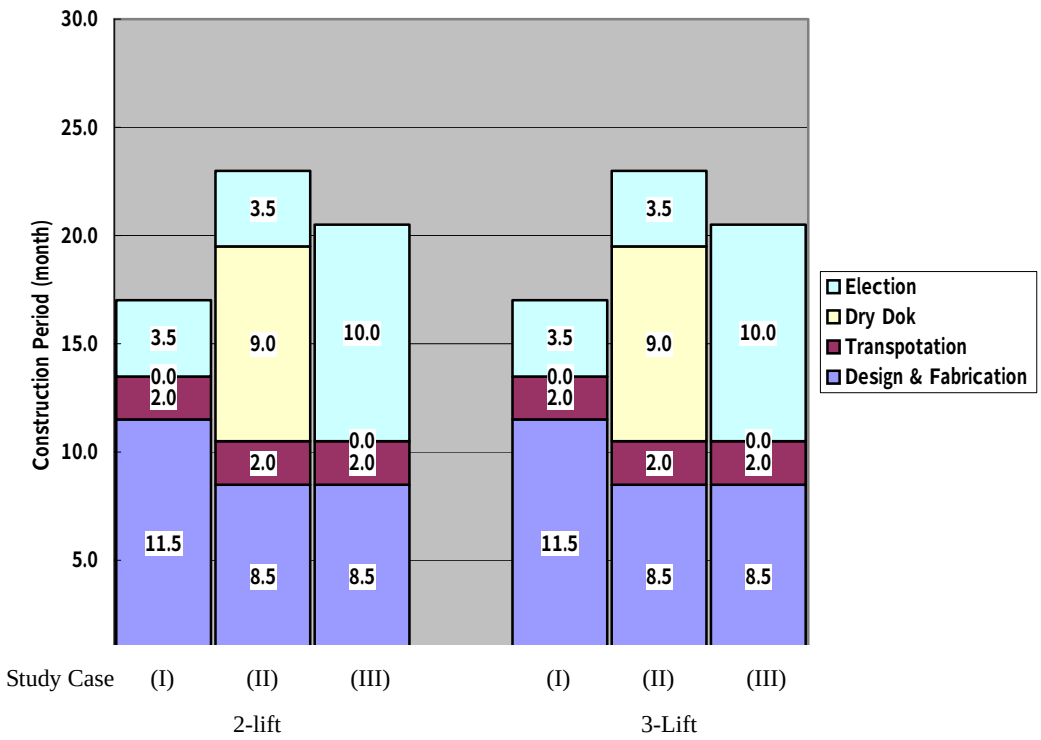

Fig.8.2.1-1 Construction Schedule of Miter Gate (1Set)

From Fig.8.2.1-1, we can point out the following items.

- The construction schedule per gate is the same in 2-lift and 3-lift.
- When comparing the construction schedules per gate with each other every study case, the study case (I) is the shortest, because the work can be executed in an easy-to-work factory.

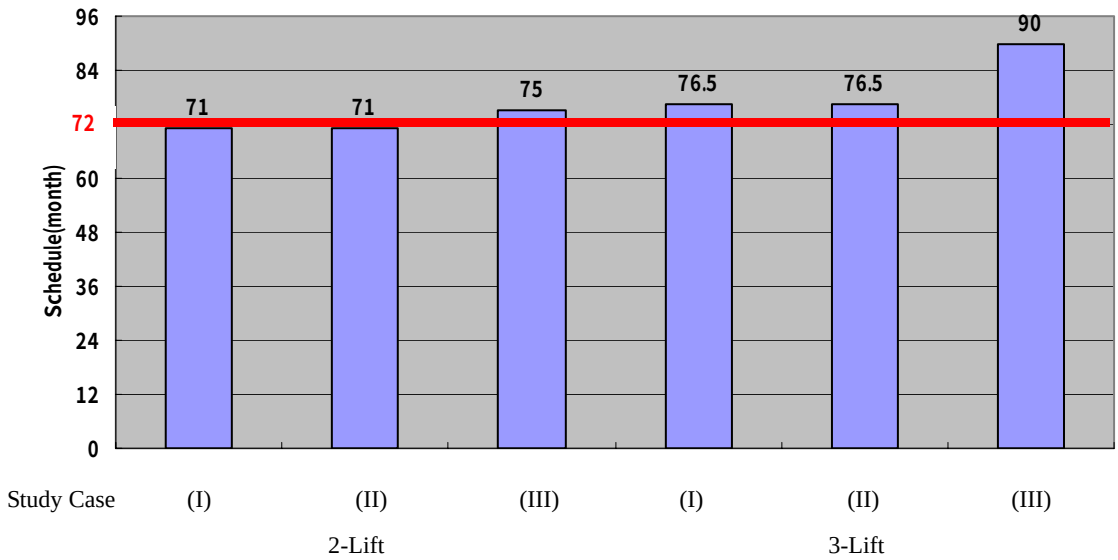

Fig.8.2.1-2 Total Construction Schedule of Miter Gate

From Table 8.2.1 and Fig.8.2.1-2, we can point out the following items.

A. 2-lift type Study Case (I) (Table 8.2.1-1)

- The total time schedule is within 71 months (5 years and 11 months), that is within 72 months (6 years)
- Since the removal time of the sea side cofferdam is critical, the time schedule can be reduced by about 4 months by putting forward the removal time.
- • The fabrication time schedule has an allowance. Assuming that the fabrication period is 4 years, the minimum required production capability becomes 9,000 tons/year. The fabrication maker is demanded to have the capability exceeding the above minimum requirement.

B. 2-lift type Study case (II) (Table 8.2.1-2)

- The total time schedule is within 71 months (5 years and 11 months), that is, within 72 months (6 years).
- Since the removal time of the sea side cofferdam is critical, the time schedule can be reduced by about 4 months by putting forward this removal time.
- A dry dock of a Panamanian contractor is used exclusively for 3 years. If the security of the dry dock is difficult, this study case cannot be adopted

C. 2-lift type Study case (III) (Table 8.2.1-3)

- The total time schedule is within 75 months (6 years and 3 months), that is, not within 72 months (6 years).
- Since the field installation work is critical, an increase of equipment and/or devices and workers is necessary for reducing the work period to be within 6 years. This problem must be studied in detail, but the work period may be shortened to be within 6 years.

D. 3-lift type Study case (I) (Table 8.2.1-4)

- The total time schedule is within 76.5 months (6 years and 4.5 months), that is, not within 72 months (6 years).
- Since the field installation work is critical, an increase of equipment and/or devices and workers is necessary for reducing the work period to be within 6 years. This problem must be studied in detail, but the work period may be shortened to be within 6 years.
- The fabrication time schedule has an allowance. Assuming that the fabrication period is 4 years, the minimum required production capability becomes 12,000 tons/year. The fabrication maker is demanded to have the capability exceeding the above minimum requirement.

E. 3-lift type Study case (II) (Table 8.2.1-5)

- The total time schedule is within 76.5 months (6 years and 4.5 months), that is, not within 72 months (6 years).
- Since the field installation work is critical, an increase of equipment and/or devices and workers is necessary for reducing the work period to be within 6 years. This problem must be studied in detail, but the work period may be shortened to be within 6 years.
- A dry dock of a Panamanian contractor is used exclusively for about 4 years. If the security of the dry dock is difficult, this study case cannot be adopted.

F. 3-lift type Study case (III) (Table 8.2.1-6)

- The total time schedule is within 90 months (7 years and 6 months), that is, not within 72 months (6 years).
- Since the field installation work is critical, an increase of equipment and/or devices and workers is necessary for reducing the work period to be within 6 years. This problem must be studied in detail, but it my be difficult to shorten the work period to be within 6 years.

ID	No.	ITEMS	Required day	Early Start	Early Finish
1	1	**CIVIL WORKS FOR LOCKS**	1563days	2003/01/01	2008/11/28
2	1.1	Site Prep work	330days	2003/01/01	2004/04/05
3	1.2	Excavation for Locks	484days	2003/08/15	2005/06/14
4	1.2.1	Common Excavation	198days	2003/08/15	2004/05/17
5	1.2.2	Chamber 1 and lockhead 2	220days	2003/10/16	2004/08/16
6	1.2.3	Chamber 2 and lockhead 3	220days	2004/08/17	2005/06/14
7	1.3	Concreting Locks	575days	2004/09/15	2006/11/14
8	1.3.1	Lockhead 1 and U/S Prep.	55days	2004/09/15	2004/11/29
9	1.3.2	Chamber 1 Gate Sill concrete	110days	2004/12/01	2005/04/30
10	1.3.3	Chamber 1 and U/S chamber concrete	121days	2005/05/01	2005/10/13
11	1.3.4	U/S Chamber Concrete	99days	2005/11/14	2006/03/28
12	1.3.5	Lockhead 2 Prep.	33days	2005/06/01	2005/07/15
13	1.3.6	Chamber 2 Gate Sill concrete	66days	2005/08/01	2005/10/28
14	1.3.7	Chamber 2 chamber concrete	132days	2005/11/01	2006/04/28
15	1.3.8	D/S Chamber Concrete	99days	2006/05/01	2006/09/13
16	1.3.9	Final Concreta Placements(top of Walls)	44days	2006/09/15	2006/11/14
17					
18	1.4	Removal of Pacific side Cofferdam	44days	2007/04/01	2007/05/30
19					
20	1.5	Site Cleanup & demobilization etc.	33days	2008/10/15	2008/11/28
21					
22	2	**LOCKS MITER GATES**	981days	2005/02/01	2008/10/14
23	2.1.1	Design & Fabrication D1	308days	2005/02/01	2006/03/30
24	2.1.2	Design & Fabrication D2d	308days	2005/12/31	2007/02/27
25	2.1.3	Design & Fabrication D3d	308days	2006/11/29	2008/01/25
26	2.2.1	Transportation D1	44days	2006/03/31	2006/05/30
27	2.2.2	Transportation D2d	44days	2007/02/28	2007/04/26
28	2.2.3	Transportation D3d	44days	2008/01/28	2008/03/26
29	2.3.1	Erection in Sitework D1	110days	2007/05/31	2007/10/29
30	2.3.2	Erection in Sitework D2d	110days	2007/10/30	2008/03/28
31	2.3.3	Erection in Sitework D3d	110days	2008/03/31	2008/08/28
32					
33	2.4	Finishing and testing etc.	33days	2008/08/29	2008/10/14
34					
35	3	KEY DATES	396days	2007/05/31	2008/11/28
36		Remove Diversion	1day	2007/05/31	2007/05/31
37		Locks Contract Complete	1day	2008/11/28	2008/11/28

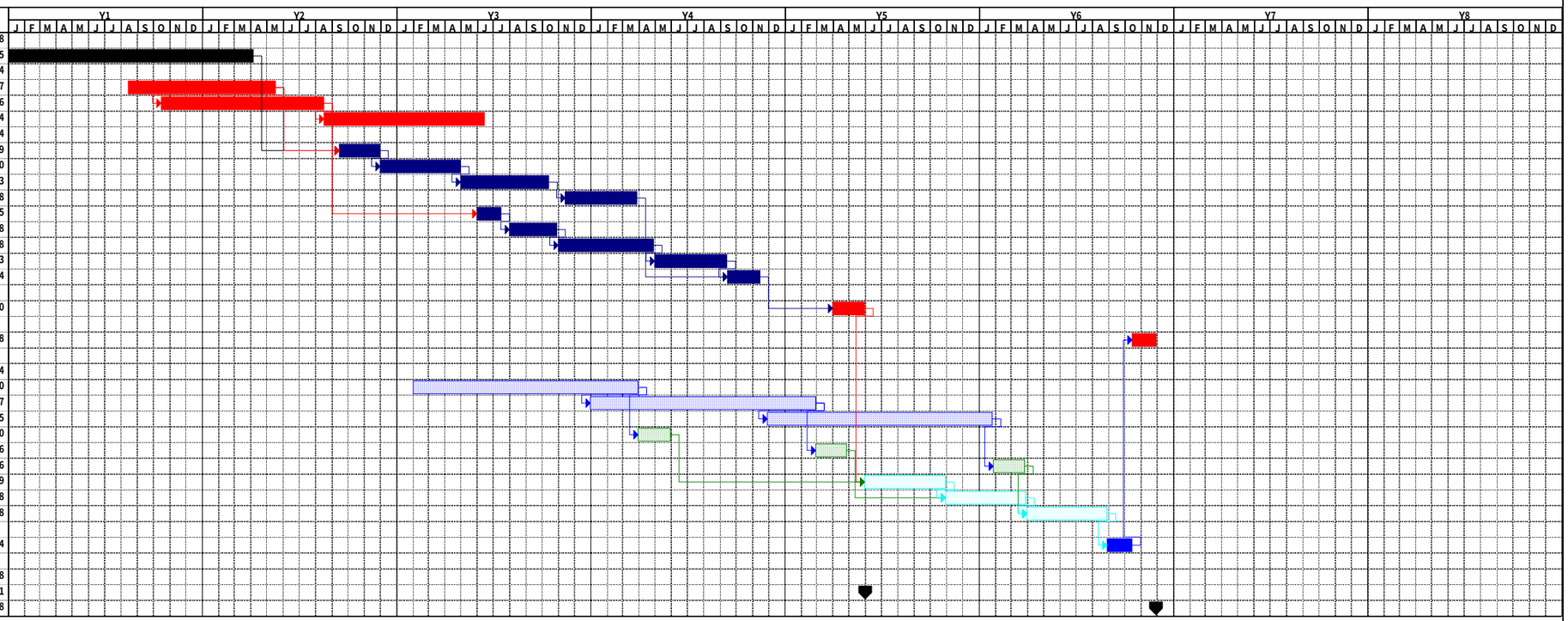

Table 8.2.1-1 Construction Schedule Miter Gate, 2-Lift of Study Case (I)

FOR THE STUDY OF
FABRICATION, INSTALLATION, AND COST ESTIMATES FOR
THE NEW LOCK GATES OF THE PANAMA CANAL

Japan Bank of International Cooperation
The Study Team

ID	No.	ITEMS	Required day	Early Start	Early Finish
1	1	CIVIL WORKS FOR LOCKS	1563days	2003/01/01	2008/11/28
2	1.1	Site Prep work	330days	2003/01/01	2004/04/05
3	1.2	Excavation for Locks	484days	2003/08/15	2005/06/14
4	1.2.1	Common Excavation	198days	2003/08/15	2004/05/17
5	1.2.2	Chamber 1 and lockhead 2	220days	2003/10/16	2004/08/16
6	1.2.3	Chamber 2 and lockhead 3	220days	2004/08/17	2005/06/14
7	1.3	Concreting Locks	575days	2004/09/15	2006/11/14
8	1.3.1	Lockhead 1 and U/S Prep.	55days	2004/09/15	2004/11/29
9	1.3.2	Chamber 1 Gate Sill concrete	110days	2004/12/01	2005/04/30
10	1.3.3	Chamber 1 and U/S chamber concrete	121days	2005/05/01	2005/10/13
11	1.3.4	U/S Chamber Concrete	99days	2005/11/14	2006/03/28
12	1.3.5	Lockhead 2 Prep.	33days	2005/06/01	2005/07/15
13	1.3.6	Chamber 2 Gate Sill concrete	66days	2005/08/01	2005/10/28
14	1.3.7	Chamber 2 chamber concrete	132days	2005/11/01	2006/04/28
15	1.3.8	D/S Chamber Concrete	99days	2006/05/01	2006/09/13
16	1.3.9	Final Concreta Placements(top of Walls)	44days	2006/09/15	2006/11/14
17					
18	1.4	Removal of Pacific side Cofferdam	44days	2007/04/01	2007/05/30
19					
20	1.5	Site Cleanup & demobilization etc.	33days	2008/10/15	2008/11/28
21					
22	2	LOCKS MITER GATES	1221days	2004/03/08	2008/10/14
23	2.1.1	Design & Fabrication D1	242days	2004/03/08	2005/02/02
24	2.1.2	Design & Fabrication D2d	242days	2004/11/04	2005/10/03
25	2.1.3	Design & Fabrication D3d	242days	2005/07/05	2006/06/01
26	2.2.1	Transportation D1	44days	2005/02/03	2005/04/05
27	2.2.2	Transportation D2d	44days	2005/10/04	2005/12/02
28	2.2.3	Transportation D3d	44days	2006/06/02	2006/08/01
29	2.3.1	Erection in Shipyard D1	264days	2005/04/06	2006/04/01
30	2.3.2	Erection in Sipeyard D2d	264days	2006/04/03	2007/03/31
31	2.3.3	Erection in shipyard D3d	264days	2007/04/01	2008/03/28
32	2.4.1	Erection in Sitework D1	110days	2007/05/31	2007/10/29
33	2.4.2	Erection in Sitework D2d	110days	2007/10/30	2008/03/28
34	2.4.3	Erection in Sitework D3d	110days	2008/03/31	2008/08/28
35					
36	2.4	Finishing and testing etc.	33days	2008/08/29	2008/10/14
37					
38	3	KEY DATES	396days	2007/05/31	2008/11/28
39		Remove Diversion	1day	2007/05/31	2007/05/31
40		Locks Contract Complete	1day	2008/11/28	2008/11/28

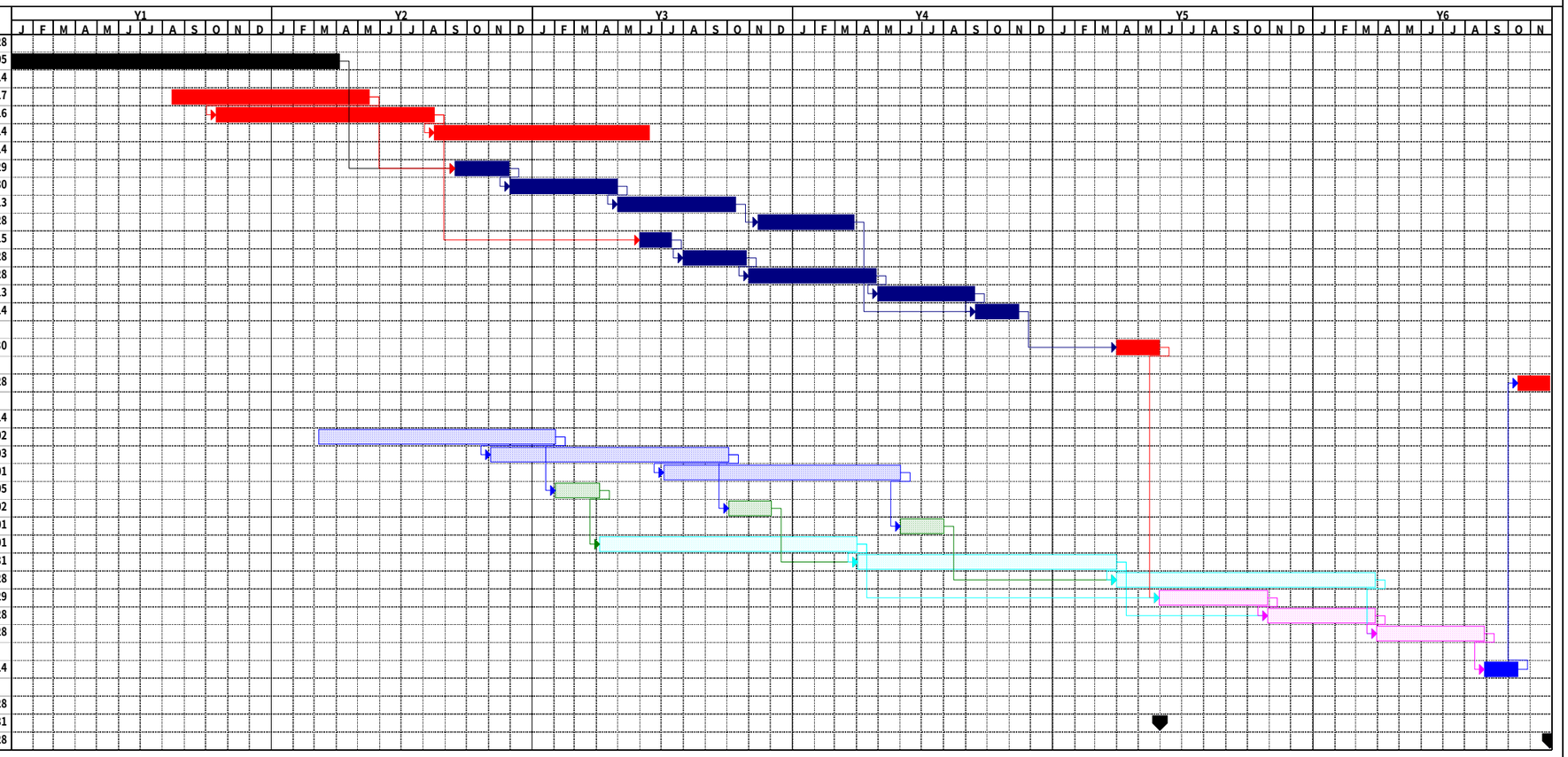

Table 8.2.1-2 Construction Schedule Miter Gate, 2-Lift of Study Case (II)

FOR THE STUDY OF
FABRICATION, INSTALLATION, AND COST ESTIMATES FOR
THE NEW LOCK GATES OF THE PANAMA CANAL

Japan Bank of International Cooperation
The Study Team

ID	No.	ITEMS	Required day	Early Start	Early Finish
1	1	**CIVIL WORKS FOR LOCKS**	1649days	2003/01/01	2009/03/30
2	1.1	Site Prep work	330days	2003/01/01	2004/04/05
3	1.2	Excavation for Locks	484days	2003/08/15	2005/06/14
4	1.2.1	Common Excavation	198days	2003/08/15	2004/05/17
5	1.2.2	Chamber 1 and lockhead 2	220days	2003/10/16	2004/08/16
6	1.2.3	Chamber 2 and lockhead 3	220days	2004/08/17	2005/06/14
7	1.3	Concreting Locks	575days	2004/09/15	2006/11/14
8	1.3.1	Lockhead 1 and U/S Prep.	55days	2004/09/15	2004/11/29
9	1.3.2	Chamber 1 Gate Sill concrete	110days	2004/12/01	2005/04/30
10	1.3.3	Chamber 1 and U/S chamber concrete	121days	2005/05/01	2005/10/13
11	1.3.4	U/S Chamber Concrete	99days	2005/11/14	2006/03/28
12	1.3.5	Lockhead 2 Prep.	33days	2005/06/01	2005/07/15
13	1.3.6	Chamber 2 Gate Sill concrete	66days	2005/08/01	2005/10/28
14	1.3.7	Chamber 2 chamber concrete	132days	2005/11/01	2006/04/28
15	1.3.8	D/S Chamber Concrete	99days	2006/05/01	2006/09/13
16	1.3.9	Final Concreta Placements(top of Walls)	44days	2006/09/15	2006/11/14
17					
18	1.4	Removal of Pacific side Cofferdam	44days	2008/10/28	2008/12/26
19					
20	1.5	Site Cleanup & demobilization etc.	33days	2009/02/12	2009/03/30
21					
22	2	**LOCKS MITER GATES**	1287days	2004/04/05	2009/02/11
23	2.1.1	Design & Fabrication D1	242days	2004/04/05	2005/03/02
24	2.1.2	Design & Fabrication D2d	242days	2004/12/02	2005/10/31
25	2.1.3	Design & Fabrication D3d	242days	2005/08/02	2006/06/29
26	2.2.1	Transportation D1	44days	2005/03/03	2005/05/01
27	2.2.2	Transportation D2d	44days	2005/11/01	2005/12/30
28	2.2.3	Transportation D3d	44days	2006/06/30	2006/08/29
29	2.3.1	Erection in Sitework D1	308days	2005/05/02	2006/06/29
30	2.3.2	Erection in Sitework D2d	308days	2006/06/30	2007/08/27
31	2.3.3	Erection in Sitework D3d	308days	2007/08/28	2008/10/27
32					
33	2.4	Finishing and testing etc.	33days	2008/12/29	2009/02/11
34					
35	3	KEY DATES	91days	2008/11/24	2009/03/30
36		Remove Diversion	1day	2008/11/24	2008/11/24
37		Locks Contract Complete	1day	2009/03/30	2009/03/30

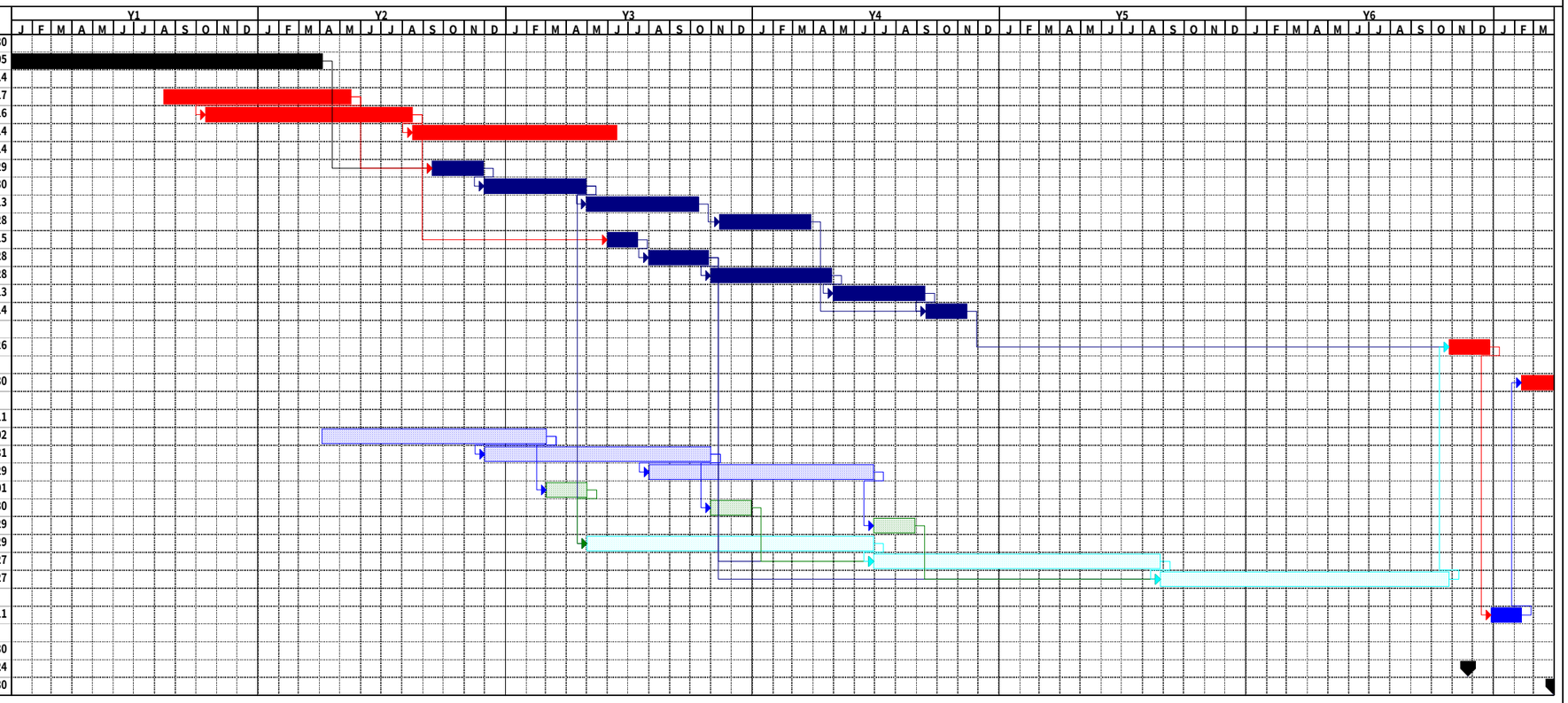

Table 8.2.1-3 Construction Schedule Miter Gate, 2-Lift of Study Case (III)

FOR THE STUDY OF
FABRICATION, INSTALLATION, AND COST ESTIMATES FOR
THE NEW LOCK GATES OF THE PANAMA CANAL

Japan Bank of International Cooperation
The Study Team

ID	No.	ITEMS	Required day	Early Start	Early Finish
1	1	**CIVIL WORKS FOR LOCKS**	1683days	2003/01/01	2009/05/15
2	1.1	Site Prep work	330days	2003/01/01	2004/04/05
3	1.2	Excavation for Locks	595days	2003/09/01	2005/11/30
4	1.2.1	Common Excavation	209days	2003/09/01	2004/06/16
5	1.2.2	Chamber 1 and lockhead 2	180days	2003/11/17	2004/07/22
6	12.3	Chamber 2 and lockhead 3	180days	2004/07/23	2005/03/28
7	1.2.4	Chamber 3 and lockhead 4	180days	2005/03/29	2005/11/30
8	1.3	Concreting Locks	696days	2004/09/15	2007/04/27
9	1.3.1	Lockhead 1 and U/S Prep.	55days	2004/09/15	2004/11/29
10	1.3.2	Chamber 1 Gate Sill concrete	110days	2004/12/01	2005/04/30
11	1.3.3	Chamber 1 chamber concrete	132days	2005/05/01	2005/10/28
12	1.3.4	Chamber 1 chamber floors	44days	2005/10/31	2005/12/29
13	1.3.5	Lockhead 2 Prep.	33days	2005/07/01	2005/08/16
14	1.3.6	Chamber 2 Gate Sill concrete	33days	2005/08/17	2005/09/30
15	1.3.7	Chamber 2 chamber concrete	132days	2006/02/01	2006/08/01
16	1.3.8	Chamber 2 chamber floors	44days	2006/08/02	2006/09/30
17	1.3.9	Lockhead 3 Prep.	33days	2005/08/17	2005/09/30
18	1.3.10	Chamber 3 Gate Sill concrete	33days	2005/10/01	2005/11/15
19	1.3.11	Chamber 3 chamber concrete	132days	2006/08/15	2007/02/12
20	1.3.12	Chamber 3 chamber floors	44days	2007/01/12	2007/03/14
21	1.3.13	Final Concreta Placements(top of Walls)	44days	2007/03/01	2007/04/27
22					
23	1.4	Removal of Pacific side Cofferdam	44days	2007/03/31	2007/05/29
24					
25	1.5	Site Cleanup & demobilization etc.	33days	2009/04/01	2009/05/15
26					
27	2	**LOCKS MITER GATES**	1232days	2004/08/04	2009/03/31
28	2.1.1	Design & Fabrication T1	308days	2004/08/04	2005/10/01
29	2.1.2	Design & Fabrication T2d	308days	2005/07/04	2006/08/30
30	2.1.3	Design & Fabrication T3d	308days	2006/06/01	2007/07/27
31	2.1.4	Design & Fabrication T4d	308days	2007/04/30	2008/06/26
32	2.2.1	Transportation T1	44days	2005/10/03	2005/12/01
33	2.2.2	Transportation T2d	44days	2006/08/31	2006/10/30
34	2.2.3	Transportation T3d	44days	2007/07/30	2007/09/26
35	2.2.4	Transportation T4d	44days	2008/06/27	2008/08/27
36	2.3.1	Erection in Gate recess T1	110days	2007/05/30	2007/10/26
37	2.3.2	Erection in Gate recess T2d	110days	2007/10/29	2008/03/27
38	2.3.3	Erection in Gate recess T3d	110days	2008/03/28	2008/08/27
39	2.3.4	Erection in Gate recess T4d	110days	2008/08/28	2009/01/28
40					
41	2.4	Finishing and testing etc.	44days	2009/01/29	2009/03/31
42					
43	3	KEY DATES	516days	2007/05/31	2009/05/15
44		Remove Diversion	1day	2007/05/31	2007/05/31
45		Locks Contract Complete	1day	2009/05/15	2009/05/15

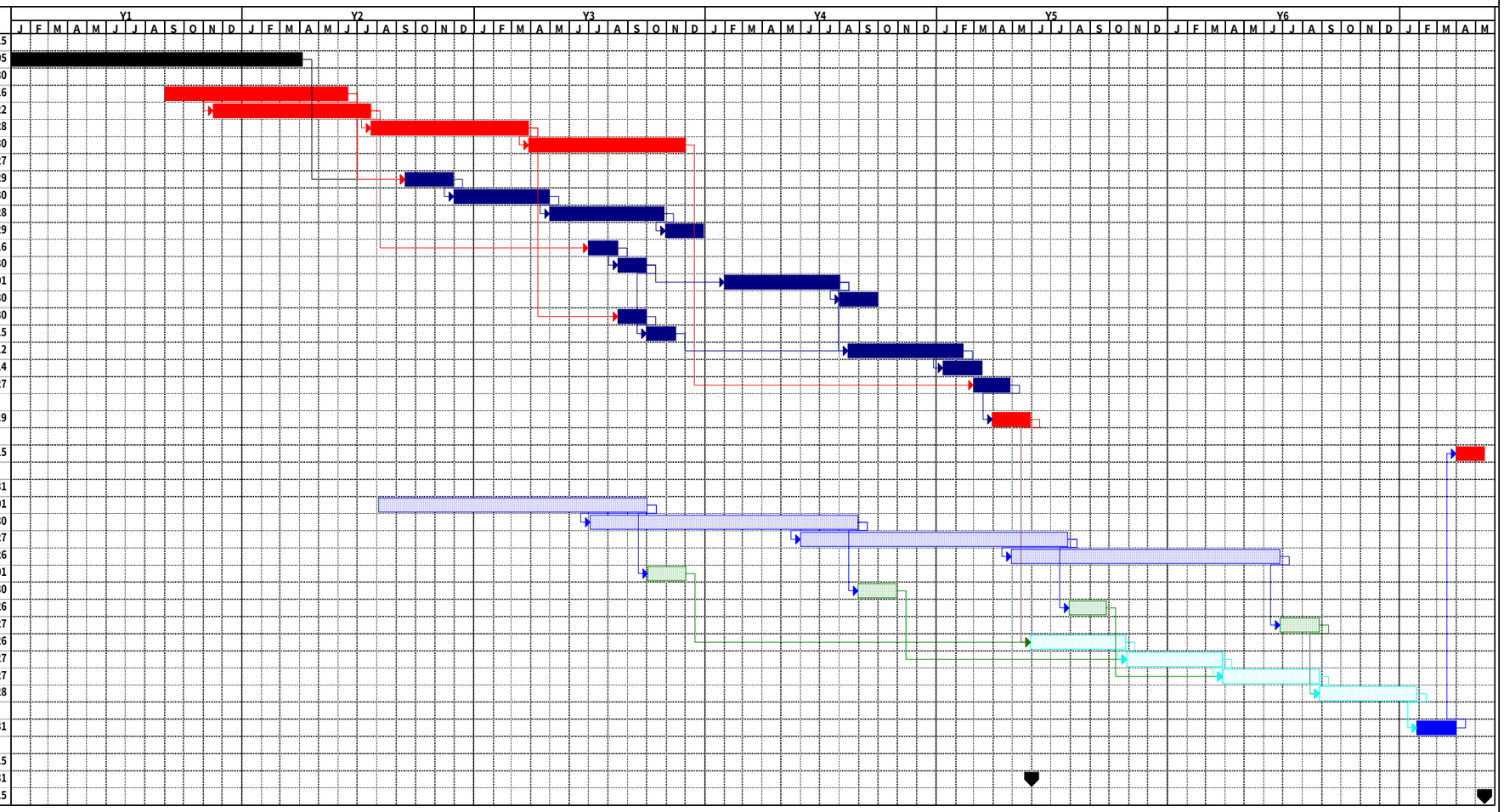

Table 8.2.1-4 Construction Schedule Miter Gate, 3-Lift of Study Case (I)

FOR THE STUDY OF
FABRICATION, INSTALLATION, AND COST ESTIMATES FOR
THE NEW LOCK GATES OF THE PANAMA CANAL

Japan Bank of International Cooperation
The Study Team

ID	No.	ITEMS	Required day	Early Start	Early Finish
1	1	**CIVIL WORKS FOR LOCKS**	1683days	2003/01/01	2009/05/15
2	1.1	Site Prep work	330days	2003/01/01	2004/04/05
3	1.2	Excavation for Locks	595days	2003/09/01	2005/11/30
4	1.2.1	Common Excavation	209days	2003/09/01	2004/06/16
5	1.2.2	Chamber 1 and lockhead 2	180days	2003/11/17	2004/07/22
6	12.3	Chamber 2 and lockhead 3	180days	2004/07/23	2005/03/28
7	1.2.4	Chamber 3 and lockhead 4	180days	2005/03/29	2005/11/30
8	1.3	Concreting Locks	696days	2004/09/15	2007/04/27
9	1.3.1	Lockhead 1 and U/S Prep.	55days	2004/09/15	2004/11/29
10	1.3.2	Chamber 1 Gate Sill concrete	110days	2004/12/01	2005/04/30
11	1.3.3	Chamber 1 chamber concrete	132days	2005/05/01	2005/10/28
12	1.3.4	Chamber 1 chamber floors	44days	2005/10/31	2005/12/29
13	1.3.5	Lockhead 2 Prep.	33days	2005/07/01	2005/08/16
14	1.3.6	Chamber 2 Gate Sill concrete	33days	2005/08/17	2005/09/30
15	1.3.7	Chamber 2 chamber concrete	132days	2006/02/01	2006/08/01
16	1.3.8	Chamber 2 chamber floors	44days	2006/08/02	2006/09/30
17	1.3.9	Lockhead 3 Prep.	33days	2005/08/17	2005/09/30
18	1.3.10	Chamber 3 Gate Sill concrete	33days	2005/10/01	2005/11/15
19	1.3.11	Chamber 3 chamber concrete	132days	2006/08/15	2007/02/12
20	1.3.12	Chamber 3 chamber floors	44days	2007/01/12	2007/03/14
21	1.3.13	Final Concreta Placements(top of Walls)	44days	2007/03/01	2007/04/27
22					
23	1.4	Removal of Pacific side Cofferdam	44days	2007/03/31	2007/05/29
24					
25	1.5	Site Cleanup & demobilization etc.	33days	2009/04/01	2009/05/15
26					
27	2	**LOCKS MITER GATES**	1496days	2003/08/04	2009/03/31
28	2.1.1	Design & Fabrication T1	242days	2003/08/04	2004/07/05
29	2.1.2	Design & Fabrication T2d	242days	2004/04/06	2005/03/03
30	2.1.3	Design & Fabrication T3d	242days	2004/12/03	2005/11/01
31	2.1.4	Design & Fabrication T4d	242days	2005/08/03	2006/06/30
32	2.2.1	Transportation T1	44days	2004/07/06	2004/09/02
33	2.2.2	Transportation T2d	44days	2005/03/04	2005/05/02
34	2.2.3	Transportation T3d	44days	2005/11/02	2005/12/31
35	2.2.4	Transportation T4d	44days	2006/07/01	2006/08/30
36	2.3.1	Erection in Shipyard T1	264days	2004/09/03	2005/09/01
37	2.3.2	Erection in Shipyard T2d	264days	2005/09/02	2006/08/30
38	2.3.3	Erection in Shipyard T3d	264days	2006/08/31	2007/08/28
39	2.3.4	Erection in Shipyard T4d	264days	2007/08/29	2008/08/27
40	2.4.1	Erection in Sitework T1	110days	2007/05/30	2007/10/26
41	2.4.2	Erection in Sitework T2d	110days	2007/10/29	2008/03/27
42	2.4.3	Erection in Sitework T3d	110days	2008/03/28	2008/08/27
43	2.4.4	Erection in Sitework T4d	110days	2008/08/28	2009/01/28
44					
45	2.4	Finishing and testing etc.	44days	2009/01/29	2009/03/31
46					
47	3	KEY DATES	516days	2007/05/31	2009/05/15
48		Remove Diversion	1day	2007/05/31	2007/05/31
49		Locks Contract Complete	1day	2009/05/15	2009/05/15

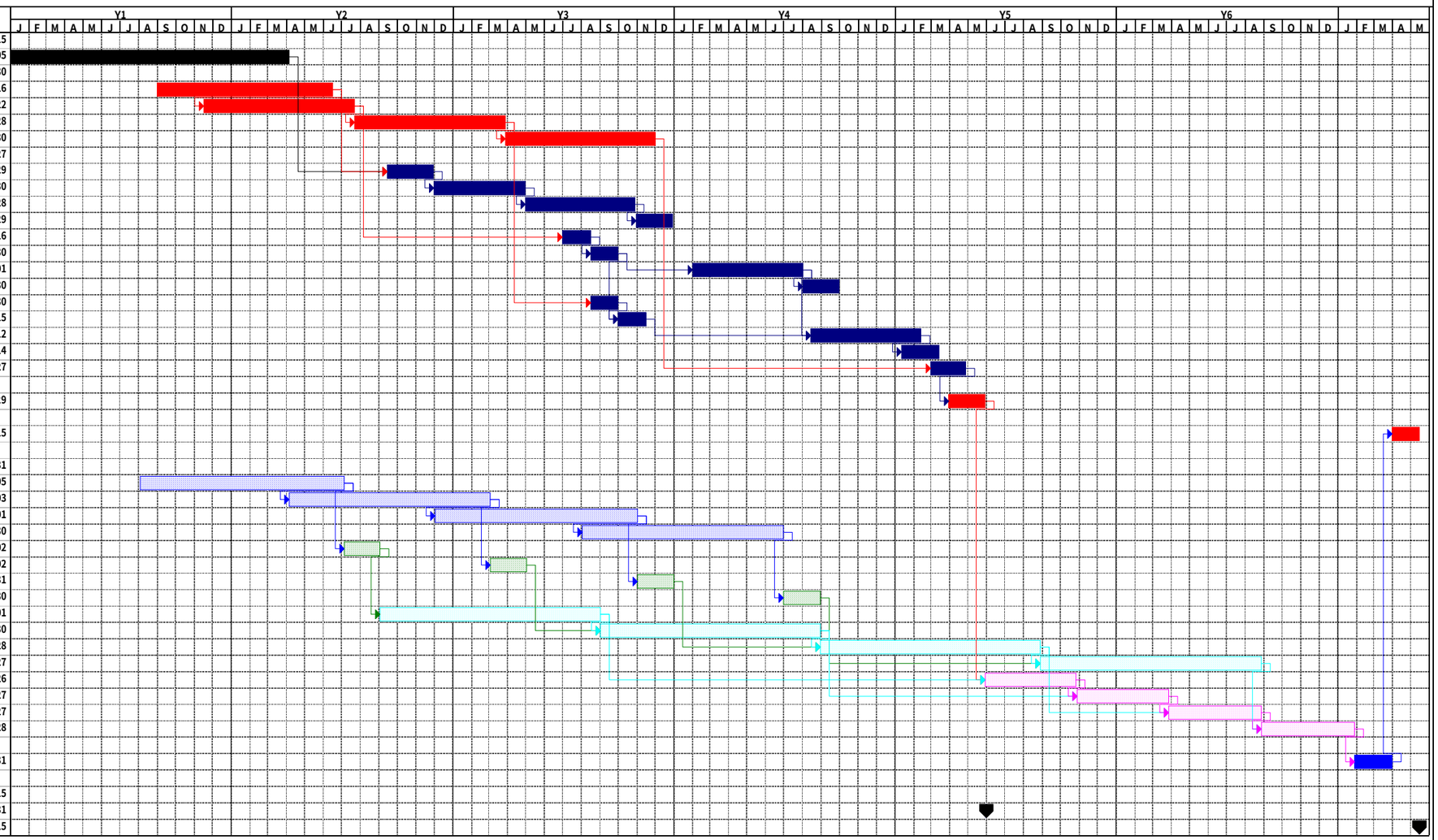

Table 8.2.1-5 Construction Schedule Miter Gate, 3-Lift of Study Case (II)

FOR THE STUDY OF
FABRICATION, INSTALLATION, AND COST ESTIMATES FOR
THE NEW LOCK GATES OF THE PANAMA CANAL

Japan Bank of International Cooperation
The Study Team

ID	No.	ITEMS	Required day	Early Start	Early Finish
1	1	**CIVIL WORKS FOR LOCKS**	1979days	2003/01/01	2010/07/05
2	1.1	Site Prep work	330days	2003/01/01	2004/04/05
3	1.2	Excavation for Locks	595days	2003/09/01	2005/11/30
4	1.2.1	Common Excavation	209days	2003/09/01	2004/06/16
5	1.2.2	Chamber 1 and lockhead 2	180days	2003/11/17	2004/07/22
6	12.3	Chamber 2 and lockhead 3	180days	2004/07/23	2005/03/28
7	1.2.4	Chamber 3 and lockhead 4	180days	2005/03/29	2005/11/30
8	1.3	Concreting Locks	696days	2004/09/15	2007/04/27
9	1.3.1	Lockhead 1 and U/S Prep.	55days	2004/09/15	2004/11/29
10	1.3.2	Chamber 1 Gate Sill concrete	110days	2004/12/01	2005/04/30
11	1.3.3	Chamber 1 chamber concrete	132days	2005/05/01	2005/10/28
12	1.3.4	Chamber 1 chamber floors	44days	2005/10/31	2005/12/29
13	1.3.5	Lockhead 2 Prep.	33days	2005/07/01	2005/08/16
14	1.3.6	Chamber 2 Gate Sill concrete	33days	2005/08/17	2005/09/30
15	1.3.7	Chamber 2 chamber concrete	132days	2006/02/01	2006/08/01
16	1.3.8	Chamber 2 chamber floors	44days	2006/08/02	2006/09/30
17	1.3.9	Lockhead 3 Prep.	33days	2005/08/17	2005/09/30
18	1.3.10	Chamber 3 Gate Sill concrete	33days	2005/10/01	2005/11/15
19	1.3.11	Chamber 3 chamber concrete	132days	2006/08/15	2007/02/12
20	1.3.12	Chamber 3 chamber floors	44days	2007/01/12	2007/03/14
21	1.3.13	Final Concreta Placements(top of Walls)	44days	2007/03/01	2007/04/27
22					
23	1.4	Removal of Pacific side Cofferdam	44days	2010/01/01	2010/03/03
24					
25	1.5	Site Cleanup & demobilization etc.	44days	2010/05/05	2010/07/05
26					
27	2	**LOCKS MITER GATES**	1606days	2004/04/05	2010/05/04
28	2.1.1	Design & Fabrication T1	242days	2004/04/05	2005/03/02
29	2.1.2	Design & Fabrication T2d	242days	2004/12/02	2005/10/31
30	2.1.3	Design & Fabrication T3d	242days	2005/08/02	2006/06/29
31	2.1.4	Design & Fabrication T4d	242days	2006/03/31	2007/02/27
32	2.2.1	Transportation T1	44days	2005/03/03	2005/05/01
33	2.2.2	Transportation T2d	44days	2005/11/01	2005/12/30
34	2.2.3	Transportation T3d	44days	2006/06/30	2006/08/29
35	2.2.4	Transportation T4d	44days	2007/02/28	2007/04/26
36	2.3.1	Erection in Sitework T1	308days	2005/05/02	2006/06/29
37	2.3.2	Erection in Sitework T2d	308days	2006/06/30	2007/08/27
38	2.3.3	Erection in Sitework T3d	308days	2007/08/28	2008/10/27
39	2.3.4	Erection in Sitework T4d	308days	2008/10/28	2009/12/31
40					
41	2.4	Finishing and testing etc.	44days	2010/03/04	2010/05/04
42					
43	3	KEY DATES	89days	2010/03/03	2010/07/05
44		Remove Diversion	1day	2010/03/03	2010/03/03
45		Locks Contract Complete	1day	2010/07/05	2010/07/05

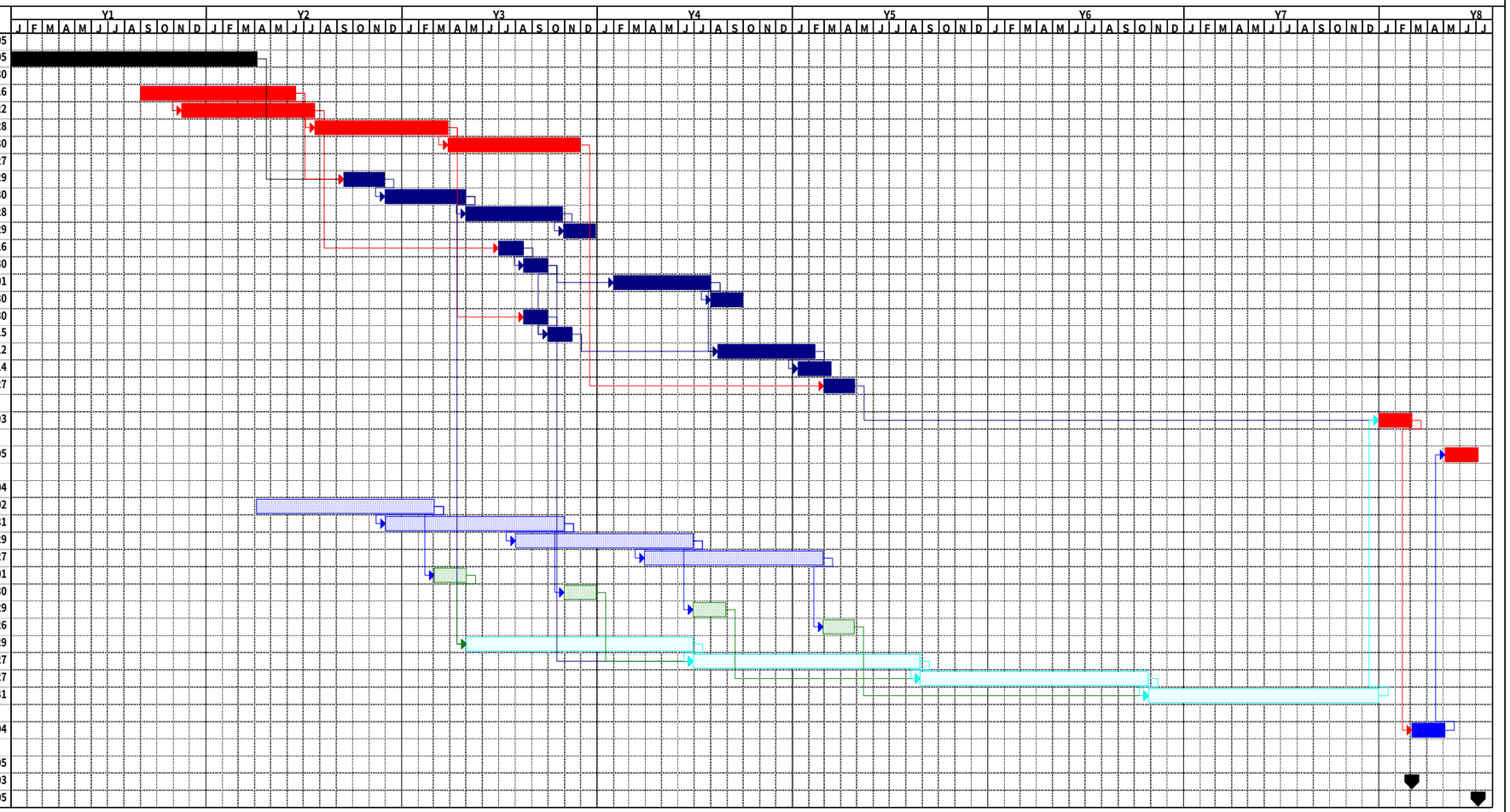

Table 8.2.1-6 Construction Schedule Miter Gate, 3-Lift of Study Case (III)

8.2.2 Rolling gate

This paragraph describes the rolling gate.

Tables 8.2.2-1 ~ 6 show the construction schedules of the rolling gate.

Fig.8.2.2-1 shows a graph of the design, fabrication, transportation, and installation schedules per gate, and Fig.8.2.2-2 shows a graph of the total schedule.

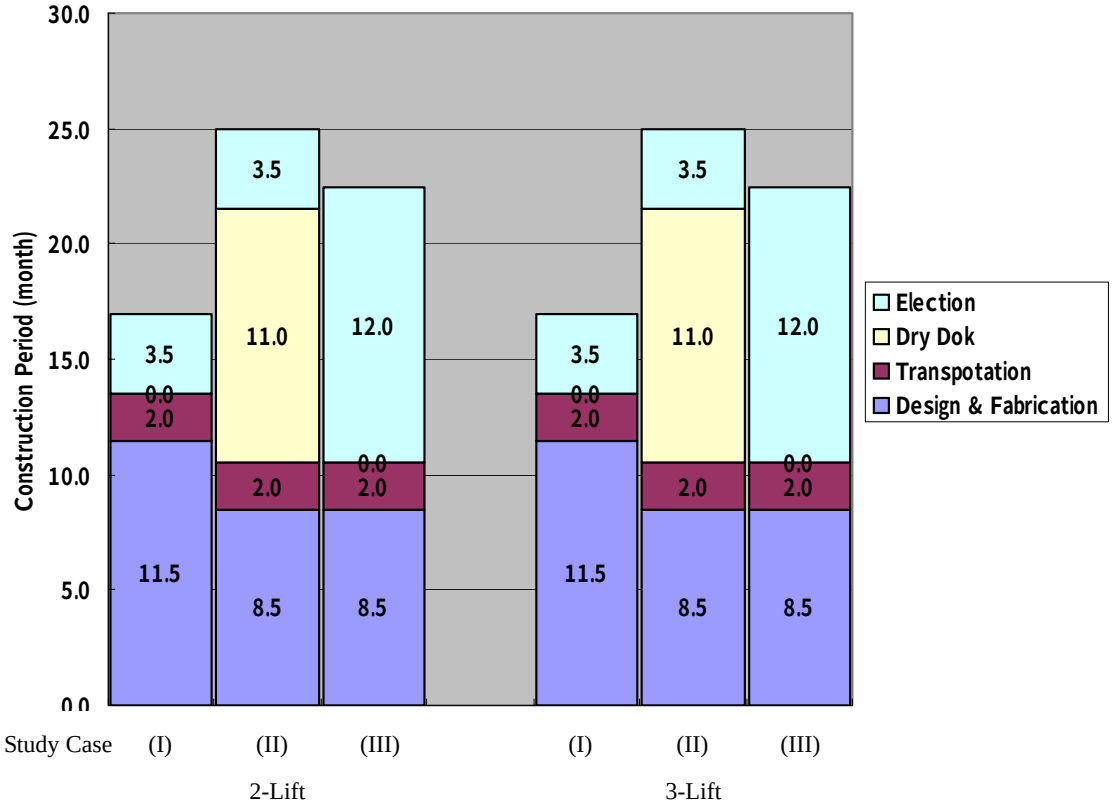

Fig.8.2.2-1 Construction Schedule of Rolling Gate (1Set)

From Fig.8.2.2-1, we can point out the following items.

- The construction schedule per gate is the same in 2-lift and 3-lift.
- When comparing the construction schedules per gate with each other every study case, the study case (I) is the shortest, because the work can be executed in an easy-to-work factory.

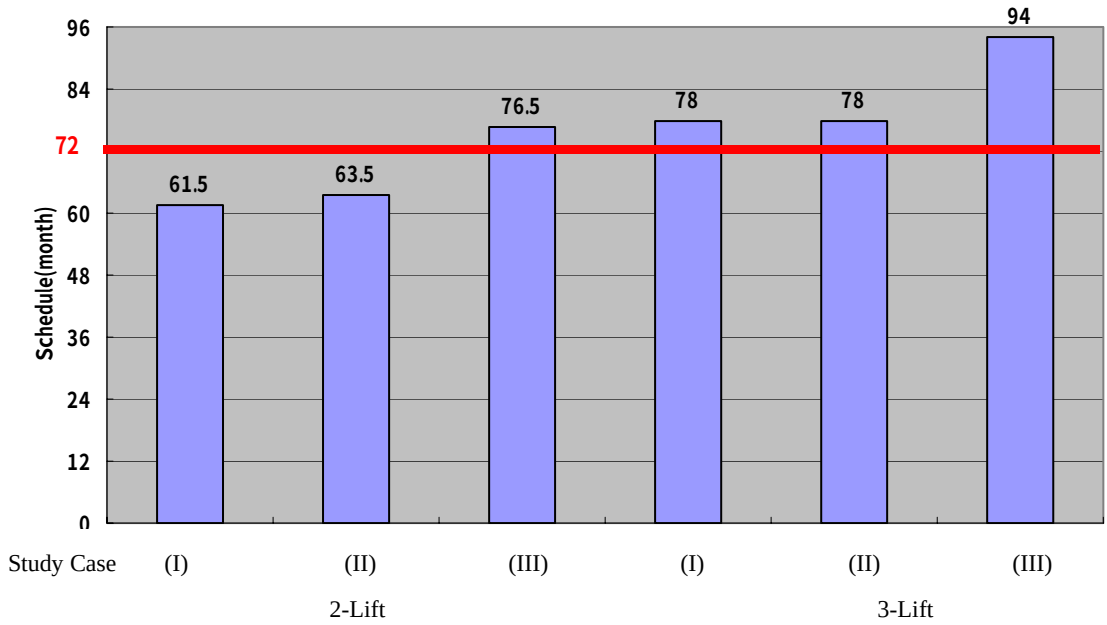

Fig.8.2.2-2 Total Construction Schedule of Rolling Gate

From Table 8.2.2 and Fig.8.2.2-2, we can point out the following items.

A. 2-lift type Study Case (I) (Table 8.2.2-1)

- The total time schedule is within 61.5 months (5 years and 1.5 months), that is, within 72 months (6 years).
- Since the removal time of the sea side cofferdam is critical, the time schedule can be reduced by about 4 months by putting forward the removal time.
- The fabrication time schedule has an allowance. Assuming that the fabrication period is 4 years, the minimum required production capability becomes 11,000 tons/year. The fabrication maker is demanded to have the capability exceeding the above minimum requirement.

B. 2-lift type Study case (II) (Table 8.2.2-2)

- The total time schedule is within 63.5 months (5 years and 3.5 months), that is, within 72 months (6 years).
- The integration work to be one unit in a dry dock and the field installation work are critical.
- A dry dock of a Panamanian contractor is used exclusively for 3 years. If the security of the dry dock is difficult, this study case cannot be adopted.

C. 2-lift type Study case (III) (Table 8.2.2-3)

- The total time schedule is within 76.5 months (6 years and 4.5 months), that is, not within 72 months (6 years).
- Since the field installation work is critical, an increase of equipment and/or devices and workers is necessary for reducing the work period to be within 6 years. This problem must be studied in detail, but the work period may be shortened to be within 6 years.

D. 3-lift type Study case (I) (Table 8.2.2-4)

- The total time schedule is within 78 months (6 years and 6 months), that is, not within 72 months (6 years).
- Since the field installation work is critical, an increase of equipment and/or devices and workers is necessary for reducing the work period to be within 6 years. This problem must be studied in detail, but the work period may be shortened to be within 6 years.
- The fabrication time schedule has an allowance. Assuming that the fabrication period is 4 years, the minimum required production capability becomes 12,000 tons/year. The fabrication maker is demanded to have the capability exceeding the above minimum requirement.

E. 3-lift type Study case (II) (Table 8.2.2-5)

- The total time schedule is within 78 months (6 years and 6 months), that is, not within 72 months (6 years).
- Since the integration work to be one unit in a dry dock and the field installation work are critical, an increase of equipment and/or devices and workers is necessary for reducing the work period to be within 6 years. This problem must be studied in detail, but the work period may be shortened to be within 6 years.
- A dry dock of a Panamanian contractor is used exclusively for about 4 years. If the security of the dry dock is difficult, this study case cannot be adopted. It may be difficult to exclusively use a dry dock for 4 years when taking the field survey results into account.

F. 3-lift type Study case (III) (Table 8.2.2-6)

- The total time schedule is within 94 months (7 years and 10 months), that is, not within 72 months (6 years).
- Since the field installation work is critical, an increase of equipment and/or devices and workers is necessary for reducing the work period to be within 6 years. This problem must be studied in detail, but it my be difficult to shorten the work period to be within 6 years.

ID	No.	ITEMS	Required day	Early Start	Early Finish
1	1	**CIVIL WORKS FOR LOCKS**	1353days	2003/01/01	2008/02/12
2	1.1	Site Prep work	197days	2003/01/01	2003/10/01
3	1.2	Excavation for Locks	593days	2003/04/01	2005/06/29
4	1.2.1	Lockhead 1 (basalt)	65days	2003/04/01	2003/06/30
5	1.2.2	Chamber 1 and lockhead 2 (La Boca predominant	174days	2003/07/01	2004/02/29
6	1.2.3	Chamber 2 and lockhead 3 (Basalt predominant)	288days	2004/03/01	2005/03/31
7	1.2.5	Gatun approach walls (basalt)	174days	2003/07/01	2004/02/29
8	1.2.6	Pacific approach wall (La Boca)	66days	2005/04/01	2005/06/29
9	1.3	Concreting Locks	682days	2003/10/02	2006/04/28
10	1.3.1	Lockhead 1 and U/S transition segments	153days	2003/10/02	2004/05/01
11	1.3.2	Chamber 1 bottom culvert	22days	2004/05/01	2004/05/31
12	1.3.3	Chamber 1 Lockwall East and West	111days	2004/06/01	2004/10/31
13	1.3.4	Chamber 1 Bottom Concrete Slabs/filling	22days	2004/11/01	2004/11/30
14	1.3.5	Lockhead 2	132days	2004/10/01	2005/03/31
15	1.3.6	Chamber 2 bottom culvert	22days	2005/04/01	2005/04/30
16	1.3.7	Chamber 2 Lockwall East and West	111days	2005/05/01	2005/09/30
17	1.3.8	Chamber 2 Bottom Concrete Slabs/filling	22days	2005/10/01	2005/10/31
18	1.3.13	Lockhead 4 and D/S transition segments	154days	2005/10/01	2006/04/28
19	1.3.14	Gatun approach walls	89days	2004/05/03	2004/09/01
20	1.3.15	Pacific approach wall	89days	2005/09/01	2005/12/31
21					
22	1.4	Removal of Pacific side Cofferdam	44days	2006/06/01	2006/07/31
23					
24	1.5	Site Cleanup & demobilization etc.	44days	2007/12/13	2008/02/12
25					
26	2	**LOCKS ROLLING GATES**	991days	2004/03/19	2007/12/12
27	2.1.1	Design & Fabrication D1	308days	2004/03/19	2005/05/16
28	2.1.2	Design & Fabrication D2	308days	2005/02/16	2006/04/13
29	2.1.3	Design & Fabrication D3d	308days	2006/01/13	2007/03/14
30	2.2.1	Transportation D1	44days	2005/05/17	2005/07/15
31	2.2.2	Transportation D2	44days	2006/04/14	2006/06/14
32	2.2.3	Transportation D3d	44days	2007/03/15	2007/05/11
33	2.2.1	Erection in Site D1	110days	2006/08/01	2006/12/29
34	2.2.2	Erection in Site D2	110days	2006/12/31	2007/05/29
35	2.2.3	Erection in Site D3d	110days	2007/05/30	2007/10/26
36	2.4	Finishing and testing etc.	33days	2007/10/29	2007/12/12
37					
38					
39	3	**KEY DATES**	408days	2006/07/31	2008/02/12
40		Connection Chamber 3 and with Pacific	1day	2006/07/31	2006/07/31
41		Connection to Gatun lake	1day	2007/12/12	2007/12/12
42		Locs Contract Complete	1day	2008/02/12	2008/02/12

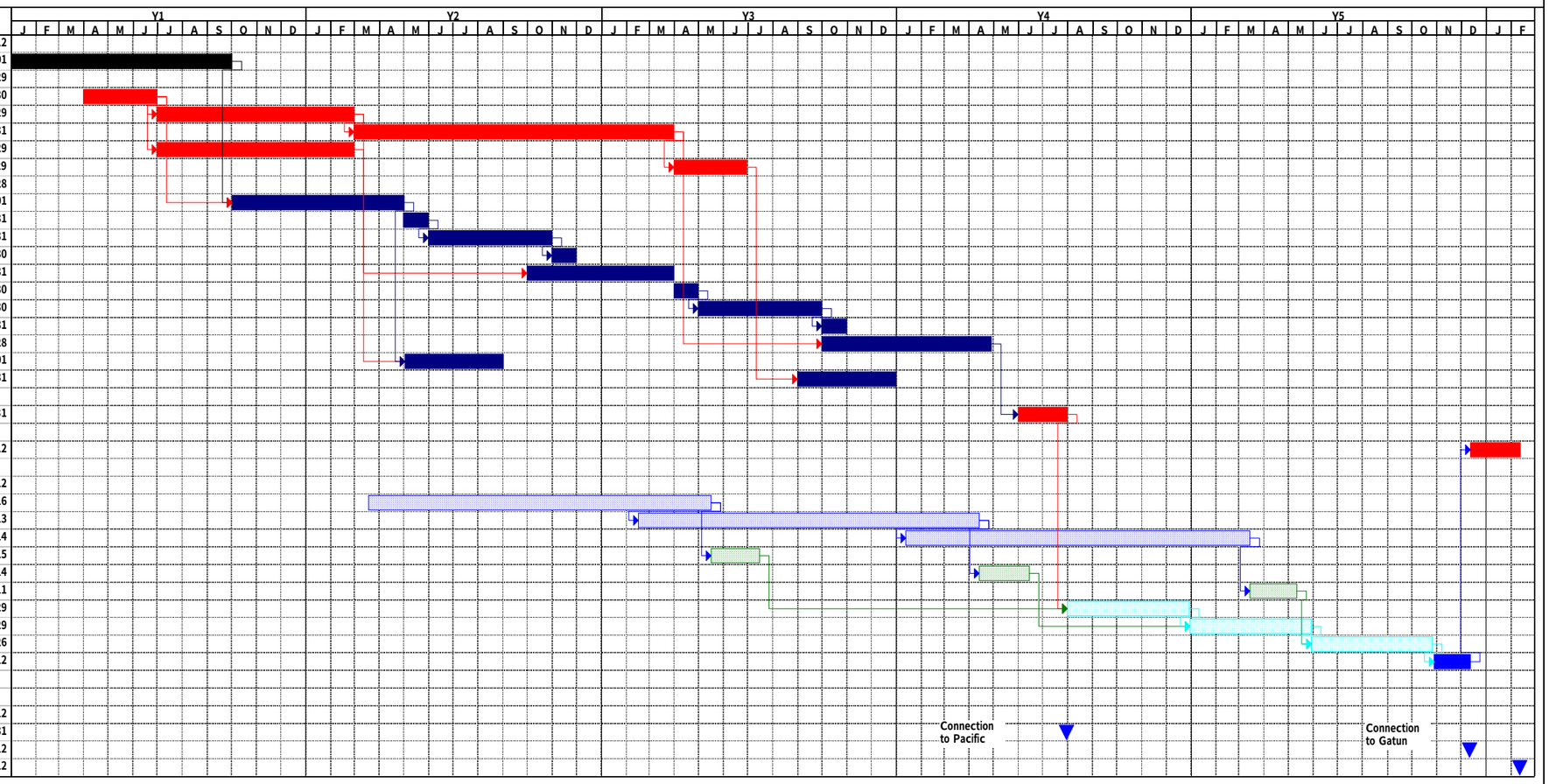

Table 8.2.2-1 Construction Schedule Rolling Gate, 2-Lift of Study Case (I)

FOR THE STUDY OF
FABRICATION, INSTALLATION, AND COST ESTIMATES FOR
THE NEW LOCK GATES OF THE PANAMA CANAL

Japan Bank of International Cooperation
The Study Team

ID	No.	ITEMS	Required day	Early Start	Early Finish
1	1	**CIVIL WORKS FOR LOCKS**	1397days	2003/01/01	2008/04/11
2	1.1	Site Prep work	196days	2003/01/01	2003/09/30
3	1.2	Excavation for Locks	593days	2003/04/01	2005/06/29
4	1.2.1	Lockhead 1 (basalt)	65days	2003/04/01	2003/06/30
5	1.2.2	Chamber 1 and lockhead 2 (La Boca predominant	174days	2003/07/01	2004/02/29
6	1.2.3	Chamber 2 and lockhead 3 (Basalt predominant)	288days	2004/03/01	2005/03/31
7	1.2.5	Gatun approach walls (basalt)	174days	2003/07/01	2004/02/29
8	1.2.6	Pacific approach wall (La Boca)	66days	2005/04/01	2005/06/29
9	1.3	Concreting Locks	683days	2003/10/01	2006/04/28
10	1.3.1	Lockhead 1 and U/S transition segments	153days	2003/10/01	2004/04/30
11	1.3.2	Chamber 1 bottom culvert	22days	2004/05/01	2004/05/31
12	1.3.3	Chamber 1 Lockwall East and West	111days	2004/06/01	2004/10/31
13	1.3.4	Chamber 1 Bottom Concrete Slabs/filling	22days	2004/11/01	2004/11/30
14	1.3.5	Lockhead 2	132days	2004/10/01	2005/03/31
15	1.3.6	Chamber 2 bottom culvert	22days	2005/04/01	2005/04/30
16	1.3.7	Chamber 2 Lockwall East and West	111days	2005/05/01	2005/09/30
17	1.3.8	Chamber 2 Bottom Concrete Slabs/filling	22days	2005/10/01	2005/10/31
18	1.3.13	Lockhead 4 and D/S transition segments	154days	2005/10/01	2006/04/28
19	1.3.14	Gatun approach walls	89days	2004/05/01	2004/08/31
20	1.3.15	Pacific approach wall	89days	2005/09/01	2005/12/31
21					
22	1.4	Removal of Pacific side Cofferdam	44days	2006/06/01	2006/07/31
23					
24	1.5	Site Cleanup & demobilization etc.	44days	2008/02/13	2008/04/11
25					
26	2	**LOCKS ROLLING GATES**	1353days	2003/01/01	2008/02/12
27	2.1.1	Design & Fabrication D1	242days	2003/01/01	2003/12/03
28	2.1.2	Design & Fabrication D2	242days	2003/09/03	2004/08/03
29	2.1.3	Design & Fabrication D3d	242days	2004/05/05	2005/04/04
30	2.2.1	Transportation D1	44days	2003/12/04	2004/02/03
31	2.2.2	Transportation D2	44days	2004/08/04	2004/10/04
32	2.2.3	Transportation D3d	44days	2005/04/05	2005/06/01
33	2.3.1	Erection in Shipyard D1	308days	2004/02/04	2005/04/04
34	2.3.2	Erection in Shipyard D2	308days	2005/04/05	2006/05/31
35	2.3.3	Erection in Shipyard D3d	308days	2006/06/01	2007/07/27
36	2.4.1	Erection in Site D1	110days	2006/08/01	2006/12/29
37	2.4.2	Erection in Site D2	110days	2006/12/31	2007/05/29
38	2.4.3	Erection in Site D3d	110days	2007/07/30	2007/12/27
39	2.4.4	Finishing and testing	33days	2007/12/28	2008/02/12
40					
41	3	**KEY DATES**	452days	2006/07/31	2008/04/11
42		Connection Chamber 3 and with Pacific	1day	2006/07/31	2006/07/31
43		Connection to Gatun lake	1day	2008/02/12	2008/02/12
44		Starting operation of Locks and WSB	1day	2008/04/11	2008/04/11

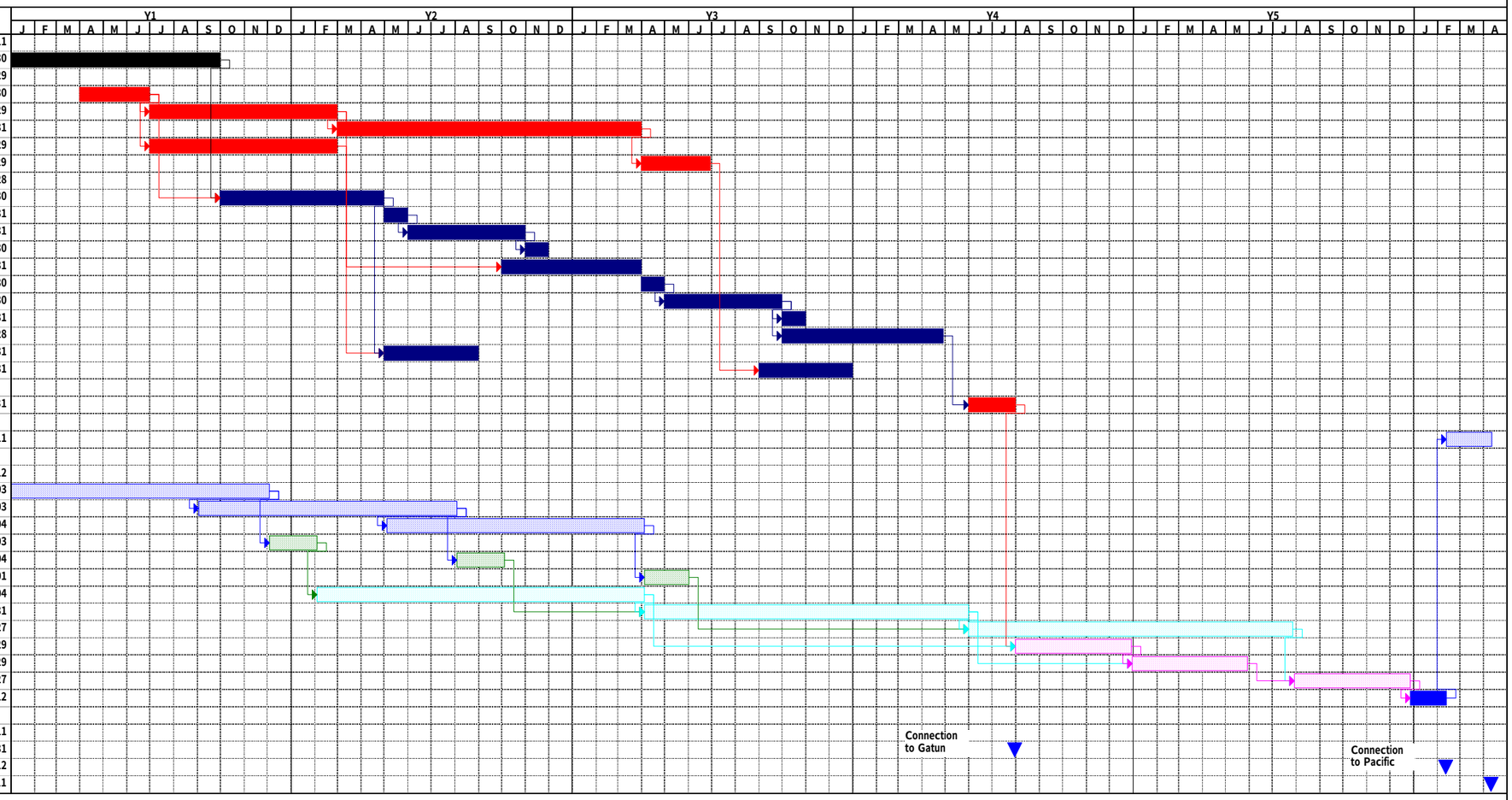

Table 8.2.2-2 Construction Schedule Rolling Gate, 2-Lift of Study Case (II)

ID	No.	ITEMS	Required day	Early Start	Early Finish
1	1	**CIVIL WORKS FOR LOCKS**	1682days	2003/01/01	2009/05/14
2	1.1	Site Prep work	196days	2003/01/01	2003/09/30
3	1.2	Excavation for Locks	593days	2003/04/01	2005/06/29
4	1.2.1	Lockhead 1 (basalt)	65days	2003/04/01	2003/06/30
5	1.2.2	Chamber 1 and lockhead 2 (La Boca predominant	174days	2003/07/01	2004/02/29
6	1.2.3	Chamber 2 and lockhead 3 (Basalt predominant)	288days	2004/03/01	2005/03/31
7	1.2.5	Gatun approach walls (basalt)	174days	2003/07/01	2004/02/29
8	1.2.6	Pacific approach wall (La Boca)	66days	2005/04/01	2005/06/29
9	1.3	Concreting Locks	683days	2003/10/01	2006/04/28
10	1.3.1	Lockhead 1 and U/S transition segments	153days	2003/10/01	2004/04/30
11	1.3.2	Chamber 1 bottom culvert	22days	2004/05/01	2004/05/31
12	1.3.3	Chamber 1 Lockwall East and West	111days	2004/06/01	2004/10/31
13	1.3.4	Chamber 1 Bottom Concrete Slabs/filling	22days	2004/11/01	2004/11/30
14	1.3.5	Lockhead 2	132days	2004/10/01	2005/03/31
15	1.3.6	Chamber 2 bottom culvert	22days	2005/04/01	2005/04/30
16	1.3.7	Chamber 2 Lockwall East and West	111days	2005/05/01	2005/09/30
17	1.3.8	Chamber 2 Bottom Concrete Slabs/filling	22days	2005/10/01	2005/10/31
18	1.3.13	Lockhead 4 and D/S transition segments	154days	2005/10/01	2006/04/28
19	1.3.14	Gatun approach walls	89days	2004/05/01	2004/08/31
20	1.3.15	Pacific approach wall	89days	2005/09/01	2005/12/31
21					
22	1.4	Removal of Pacific side Cofferdam	44days	2008/11/27	2009/01/27
23					
24	1.5	Site Cleanup & demobilization etc.	44days	2009/03/16	2009/05/14
25					
26	2	**LOCKS ROLLING GATES**	1420days	2003/10/31	2009/03/13
27	2.1.1	Design & Fabrication D1	242days	2003/10/31	2004/09/30
28	2.1.2	Design & Fabrication D2	242days	2004/07/02	2005/05/30
29	2.1.3	Design & Fabrication D3d	242days	2005/03/02	2006/01/26
30	2.2.1	Transportation D1	44days	2004/10/04	2004/12/01
31	2.2.2	Transportation D2	44days	2005/05/31	2005/07/29
32	2.2.3	Transportation D3d	44days	2006/01/27	2006/03/29
33	2.3.1	Erection in Gate recess D1	352days	2004/12/02	2006/03/30
34	2.3.2	Erection in Gate recess D2	352days	2006/03/31	2007/07/26
35	2.3.3	Erection in Gate recess D3d	352days	2007/07/27	2008/11/26
36	2.4	Finishing and testing	33days	2009/01/28	2009/03/13
37					
38	3	**KEY DATES**	78days	2009/01/27	2009/05/14
39		Connection Chamber 3 and with Pacific	1day	2009/01/27	2009/01/27
40		Connection to Gatun lake	1day	2009/03/13	2009/03/13
41		Starting operation of Locks and WSB	1day	2009/05/14	2009/05/14

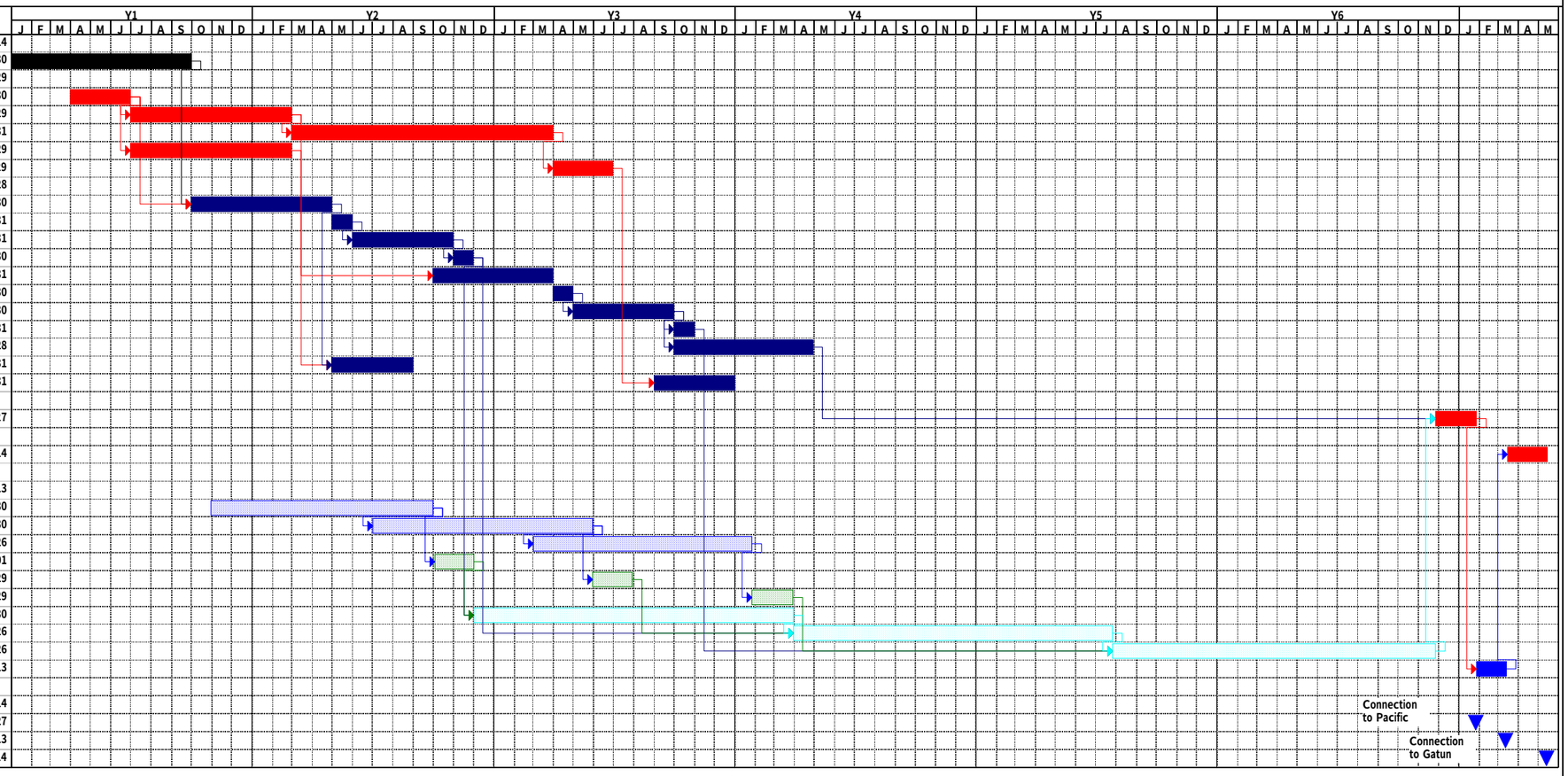

Table 8.2.2-3 Construction Schedule Rolling Gate, 2-Lift of Study Case (III)

FOR THE STUDY OF
FABRICATION, INSTALLATION, AND COST ESTIMATES FOR
THE NEW LOCK GATES OF THE PANAMA CANAL

Japan Bank of International Cooperation
The Study Team

ID	No.	ITEMS	Required day	Early Start	Early Finish
1	1	**CIVIL WORKS FOR LOCKS**	1718days	2003/01/01	2009/07/03
2	1.1	Site Prep work	197days	2003/01/01	2003/10/01
3	1.2	Excavation for Locks	793days	2003/04/01	2006/03/31
4	1.2.1	Lockhead 1 (basalt)	65days	2003/04/01	2003/06/30
5	1.2.2	Chamber 1 and lockhead 2 (La Boca predominant	174days	2003/07/01	2004/02/29
6	1.2.3	Chamber 2 and lockhead 3 (Basalt predominant)	288days	2004/03/01	2005/03/31
7	1.2.4	Chamber 3 and lockhead 4 (basalt)	200days	2005/04/01	2005/12/31
8	1.2.5	Gatun approach walls (basalt)	174days	2003/07/01	2004/02/29
9	1.2.6	Pacific approach wall (La Boca)	66days	2006/01/01	2006/03/31
10	1.3	Concreting Locks	926days	2003/10/02	2007/03/31
11	1.3.1	Lockhead 1 and U/S transition segments	153days	2003/10/02	2004/05/01
12	1.3.2	Chamber 1 bottom culvert	22days	2004/05/01	2004/05/31
13	1.3.3	Chamber 1 Lockwall East and West	111days	2004/06/01	2004/10/31
14	1.3.4	Chamber 1 Bottom Concrete Slabs/filling	22days	2004/11/01	2004/11/30
15	1.3.5	Lockhead 2	132days	2004/10/01	2005/03/31
16	1.3.6	Chamber 2 bottom culvert	22days	2005/04/01	2005/04/30
17	1.3.7	Chamber 2 Lockwall East and West	111days	2005/05/01	2005/09/30
18	1.3.8	Chamber 2 Bottom Concrete Slabs/filling	22days	2005/10/01	2005/10/31
19	1.3.9	Lockhead 3	132days	2005/09/01	2006/02/28
20	1.3.10	Chamber 3 bottom culvert	23days	2006/03/01	2006/03/31
21	1.3.11	Chamber 3 Lockwall East and West	111days	2006/04/01	2006/08/31
22	1.3.12	Chamber 3 Bottom concrete filling	22days	2006/09/01	2006/09/30
23	1.3.13	Lockhead 4 and D/S transition segments	154days	2006/09/01	2007/03/31
24	1.3.14	Gatun approach walls	89days	2004/05/03	2004/09/01
25	1.3.15	Pacific approach wall	89days	2006/07/01	2006/10/31
26					
27	1.4	Removal of Pacific side Cofferdam	44days	2007/05/01	2007/06/30
28					
29	1.5	Site Cleanup & demobilization etc.	44days	2009/05/05	2009/07/03
30					
31	2	**LOCKS ROLLING GATES**	1232days	2004/09/07	2009/05/04
32	2.1.1	Design & Fabrication T1	308days	2004/09/07	2005/11/03
33	2.1.2	Design & Fabrication T2	308days	2005/08/05	2006/10/02
34	2.1.3	Design & Fabrication T3	308days	2006/07/04	2007/08/30
35	2.1.4	Design & Fabrication T4d	308days	2007/06/01	2008/07/30
36	2.2.1	Transportation T1	44days	2005/11/04	2006/01/02
37	2.2.2	Transportation T2	44days	2006/10/03	2006/12/01
38	2.2.3	Transportation T3	44days	2007/08/31	2007/10/30
39	2.2.4	Transportation T4d	44days	2008/07/31	2008/09/30
40	2.3.1	Erection in Site T1	110days	2007/07/01	2007/11/28
41	2.3.2	Erection in Site T2	110days	2007/11/29	2008/04/29
42	2.3.3	Erection in Site T3	110days	2008/04/30	2008/09/29
43	2.3.4	Erection in Site T4d	110days	2008/10/01	2009/03/03
44	2.4.4	Finishing and testing	44days	2009/03/04	2009/05/04
45					
46					
47	3	**KEY DATES**	529days	2007/07/01	2009/07/03
48		Connection Chamber 3 and with Pacific	1day	2007/07/01	2007/07/01
49		Connection to Gatun lake	1day	2009/05/04	2009/05/04
50		Locs Contract Complete	1day	2009/07/03	2009/07/03

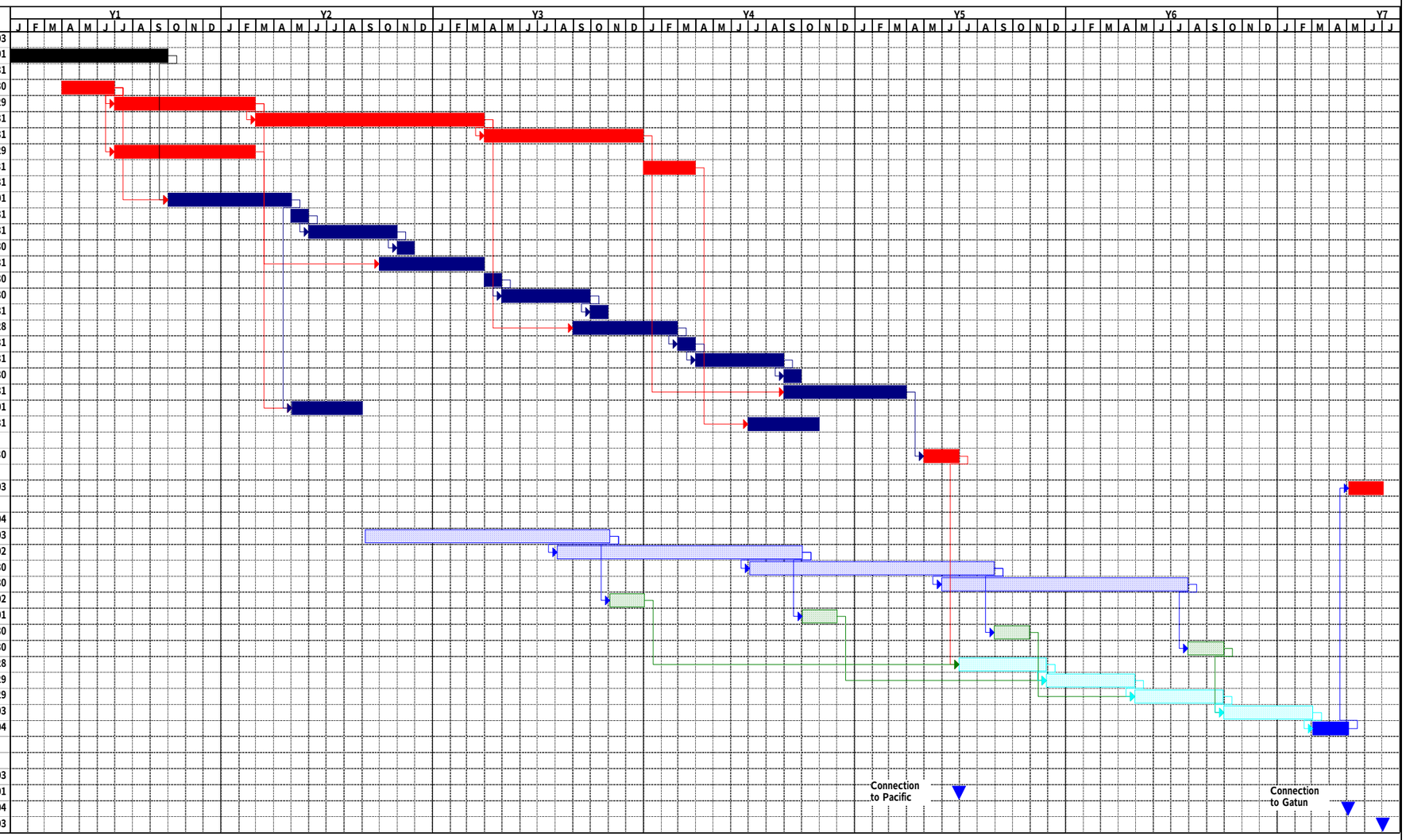

Table 8.2.2-4 Construction Schedule Rolling Gate, 3-Lift of Study Case (I)

FOR THE STUDY OF
FABRICATION, INSTALLATION, AND COST ESTIMATES FOR
THE NEW LOCK GATES OF THE PANAMA CANAL

Japan Bank of International Cooperation
The Study Team

ID	No.	ITEMS	Required day	Early Start	Early Finish
1	1	**CIVIL WORKS FOR LOCKS**	1717days	2003/01/01	2009/07/02
2	1.1	Site Prep work	196days	2003/01/01	2003/09/30
3	1.2	Excavation for Locks	793days	2003/04/01	2006/03/31
4	1.2.1	Lockhead 1 (basalt)	65days	2003/04/01	2003/06/30
5	1.2.2	Chamber 1 and lockhead 2 (La Boca predominant	174days	2003/07/01	2004/02/29
6	1.2.3	Chamber 2 and lockhead 3 (Basalt predominant)	288days	2004/03/01	2005/03/31
7	1.2.4	Chamber 3 and lockhead 4 (basalt)	200days	2005/04/01	2005/12/31
8	1.2.5	Gatun approach walls (basalt)	174days	2003/07/01	2004/02/29
9	1.2.6	Pacific approach wall (La Boca)	66days	2006/01/01	2006/03/31
10	1.3	Concreting Locks	927days	2003/10/01	2007/03/31
11	1.3.1	Lockhead 1 and U/S transition segments	153days	2003/10/01	2004/04/30
12	1.3.2	Chamber 1 bottom culvert	22days	2004/05/01	2004/05/31
13	1.3.3	Chamber 1 Lockwall East and West	111days	2004/06/01	2004/10/31
14	1.3.4	Chamber 1 Bottom Concrete Slabs/filling	22days	2004/11/01	2004/11/30
15	1.3.5	Lockhead 2	132days	2004/10/01	2005/03/31
16	1.3.6	Chamber 2 bottom culvert	22days	2005/04/01	2005/04/30
17	1.3.7	Chamber 2 Lockwall East and West	111days	2005/05/01	2005/09/30
18	1.3.8	Chamber 2 Bottom Concrete Slabs/filling	22days	2005/10/01	2005/10/31
19	1.3.9	Lockhead 3	132days	2005/09/01	2006/02/28
20	1.3.10	Chamber 3 bottom culvert	23days	2006/03/01	2006/03/31
21	1.3.11	Chamber 3 Lockwall East and West	111days	2006/04/01	2006/08/31
22	1.3.12	Chamber 3 Bottom concrete filling	22days	2006/09/01	2006/09/30
23	1.3.13	Lockhead 4 and D/S transition segments	154days	2006/09/01	2007/03/31
24	1.3.14	Gatun approach walls	89days	2004/05/01	2004/08/31
25	1.3.15	Pacific approach wall	89days	2006/07/01	2006/10/31
26					
27	1.4	Removal of Pacific side Cofferdam	44days	2007/05/01	2007/06/30
28					
29	1.5	Site Cleanup & demobilization etc.	44days	2009/05/04	2009/07/02
30					
31	2	**LOCKS ROLLING GATES**	1672days	2003/01/02	2009/05/01
32	2.1.1	Design & Fabrication T1	242days	2003/01/02	2003/12/04
33	2.1.2	Design & Fabrication T2	242days	2003/09/04	2004/08/04
34	2.1.3	Design & Fabrication T3	242days	2004/05/06	2005/04/05
35	2.1.4	Design & Fabrication T4d	242days	2005/01/04	2005/12/02
36	2.2.1	Transportation T1	44days	2003/12/05	2004/02/04
37	2.2.2	Transportation T2	44days	2004/08/05	2004/10/05
38	2.2.3	Transportation T3	44days	2005/04/06	2005/06/02
39	2.2.4	Transportation T4d	44days	2005/12/05	2006/01/31
40	2.3.1	Erection in shipyard T1	308days	2004/02/05	2005/04/05
41	2.3.2	Erection in shipyard T2	308days	2005/04/06	2006/06/01
42	2.3.3	Erection in shipyard T3	308days	2006/06/02	2007/07/30
43	2.3.4	Erection in shipyard T4d	308days	2007/07/31	2008/09/29
44	2.4.1	Erection in Sitework T1	110days	2007/07/01	2007/11/28
45	2.4.2	Erection in Sitework T2	110days	2007/11/29	2008/04/29
46	2.4.3	Erection in Sitework T3	110days	2008/04/30	2008/09/29
47	2.4.4	Erection in Sitework T4d	110days	2008/09/30	2009/03/02
48	2.5	Finishing and testing	44days	2009/03/03	2009/05/01
49					
50	3	**KEY DATES**	528days	2007/07/01	2009/07/02
51		Connection Chamber 3 and with Pacific	1day	2007/07/01	2007/07/01
52		Connection to Gatun lake	1day	2009/05/01	2009/05/01
53		Starting operation of Locks and WSB	1day	2009/07/02	2009/07/02

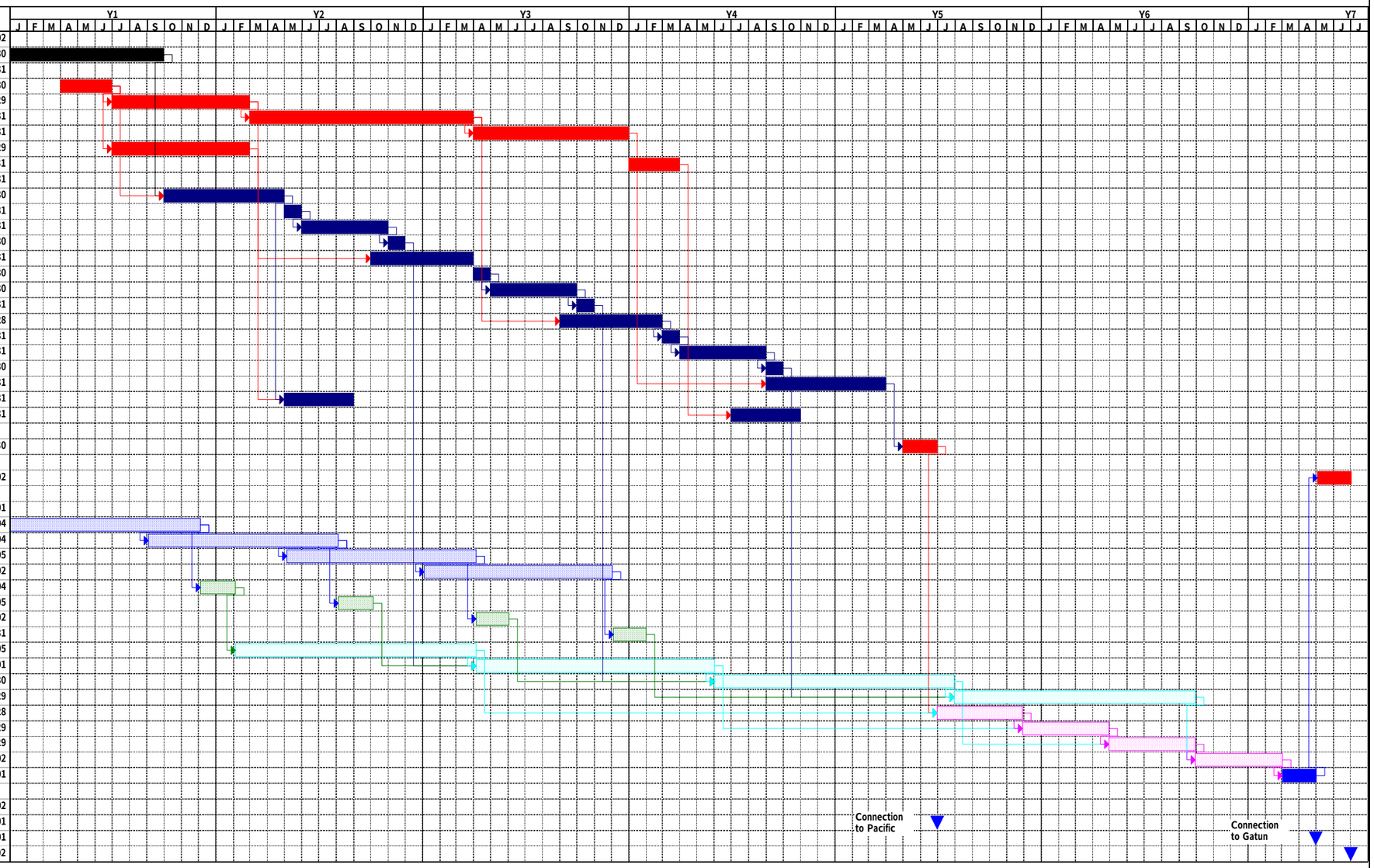

Table 8.2.2-5 Construction Schedule Rolling Gate, 3-Lift of Study Case (II)

FOR THE STUDY OF
FABRICATION, INSTALLATION, AND COST ESTIMATES FOR
THE NEW LOCK GATES OF THE PANAMA CANAL

Japan Bank of International Cooperation
The Study Team

ID	No.	ITEMS	Required day	Early Start	Early Finish
1	1	**CIVIL WORKS FOR LOCKS**	2045days	2003/01/01	2010/10/05
2	1.1	Site Prep work	196days	2003/01/01	2003/09/30
3	1.2	Excavation for Locks	793days	2003/04/01	2006/03/31
4	1.2.1	Lockhead 1 (basalt)	65days	2003/04/01	2003/06/30
5	1.2.2	Chamber 1 and lockhead 2 (La Boca predominant	174days	2003/07/01	2004/02/29
6	1.2.3	Chamber 2 and lockhead 3 (Basalt predominant)	288days	2004/03/01	2005/03/31
7	1.2.4	Chamber 3 and lockhead 4 (basalt)	200days	2005/04/01	2005/12/31
8	1.2.5	Gatun approach walls (basalt)	174days	2003/07/01	2004/02/29
9	1.2.6	Pacific approach wall (La Boca)	66days	2006/01/01	2006/03/31
10	1.3	Concreting Locks	927days	2003/10/01	2007/03/31
11	1.3.1	Lockhead 1 and U/S transition segments	153days	2003/10/01	2004/04/30
12	1.3.2	Chamber 1 bottom culvert	22days	2004/05/01	2004/05/31
13	1.3.3	Chamber 1 Lockwall East and West	111days	2004/06/01	2004/10/31
14	1.3.4	Chamber 1 Bottom Concrete Slabs/filling	22days	2004/11/01	2004/11/30
15	1.3.5	Lockhead 2	132days	2004/10/01	2005/03/31
16	1.3.6	Chamber 2 bottom culvert	22days	2005/04/01	2005/04/30
17	1.3.7	Chamber 2 Lockwall East and West	111days	2005/05/01	2005/09/30
18	1.3.8	Chamber 2 Bottom Concrete Slabs/filling	22days	2005/10/01	2005/10/31
19	1.3.9	Lockhead 3	132days	2005/09/01	2006/02/28
20	1.3.10	Chamber 3 bottom culvert	23days	2006/03/01	2006/03/31
21	1.3.11	Chamber 3 Lockwall East and West	111days	2006/04/01	2006/08/31
22	1.3.12	Chamber 3 Bottom concrete filling	22days	2006/09/01	2006/09/30
23	1.3.13	Lockhead 4 and D/S transition segments	154days	2006/09/01	2007/03/31
24	1.3.14	Gatun approach walls	89days	2004/05/01	2004/08/31
25	1.3.15	Pacific approach wall	89days	2006/07/01	2006/10/31
26					
27	1.4	Removal of Pacific side Cofferdam	44days	2010/04/05	2010/06/03
28					
29	1.5	Site Cleanup & demobilization etc.	44days	2010/08/05	2010/10/05
30					
31	2	**LOCKS ROLLING GATES**	1783days	2003/10/31	2010/08/04
32	2.2.1	Design & Fabrication T1	242days	2003/10/31	2004/09/30
33	2.2.2	Design & Fabrication T2	242days	2004/07/02	2005/05/30
34	2.2.3	Design & Fabrication T3	242days	2005/03/02	2006/01/26
35	2.2.4	Design & Fabrication T4d	242days	2005/10/31	2006/09/27
36	2.2.3	Transportation T1	44days	2004/10/04	2004/12/01
37	2.2.3	Transportation T2	44days	2005/05/31	2005/07/29
38	2.2.3	Transportation T3	44days	2006/01/27	2006/03/29
39	2.2.3	Transportation T4d	44days	2006/09/28	2006/11/27
40	2.4.1	Erection in Gate recess T1	352days	2004/12/02	2006/03/30
41	2.4.2	Erection in Gate recess T2	352days	2006/03/31	2007/07/26
42	2.4.3	Erection in Gate recess T3	352days	2007/07/27	2008/11/26
43	2.4.4	Erection in Gate recess T4d	352days	2008/11/27	2010/04/02
44	2.5	Finishing and testing	44days	2010/06/04	2010/08/04
45					
46	3	**KEY DATES**	89days	2010/06/03	2010/10/05
47		Connection Chamber 3 and with Pacific	1day	2010/06/03	2010/06/03
48		Connection to Gatun lake	1day	2010/08/04	2010/08/04
49		Starting operation of Locks and WSB	1day	2010/10/05	2010/10/05

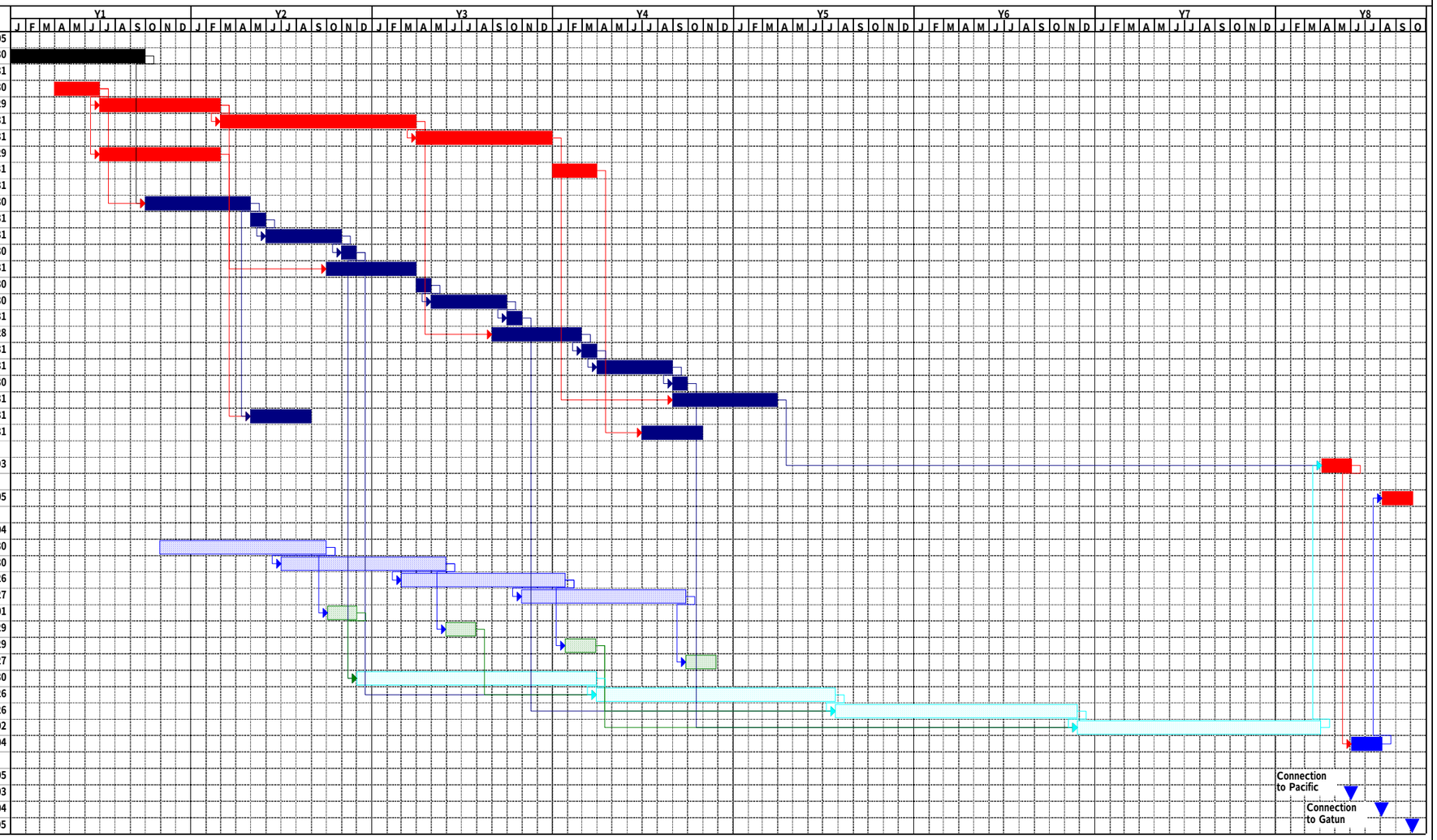

Table 8.2.2-6 Construction Schedule Rolling Gate, 3-Lift of Study Case (III)

8.2.3 Summary

Table 8.2.3-1 summarizes the above results.

Table 8.2.3-1 Construction period Evaluation of Study Cases

Study Cases					Period	Evaluation
Miter Gate	2-Lift	Study Case (I)	One unit Fabrication, Trans-port, Installation	Wet	71	A
		Study Case (II)	Block Fabrication, Transport, Dry Dock Assembly, One-Unit Towing, Installation	Wet	71	A
		Study Case (III)	Block Fabrication, Transport, Installation	Dry	75	B
	3-Lift	Study Case (I)	One unit Fabrication, Trans-port, Installation	Wet	76.5	B
		Study Case (II)	Block Fabrication, Transport, Dry Dock Assembly, One-Unit Towing, Installation	Wet	76.5	B
		Study Case (III)	Block Fabrication, Transport, Installation	Dry	90	C
Rolling Gate	2-Lift	Study Case (I)	One unit Fabrication, Trans-port, Installation	Wet	61.5	A
		Study Case (II)	Block Fabrication, Transport, Dry Dock Assembly, One-Unit Towing, Installation	Wet	61.5	A
		Study Case (III)	Block Fabrication, Transport, Installation	Dry	76.5	B
	3-Lift	Study Case (I)	One unit Fabrication, Trans-port, Installation	Wet	78	B
		Study Case (II)	Block Fabrication, Transport, Dry Dock Assembly, One-Unit Towing, Installation	Wet	78	B
		Study Case (III)	Block Fabrication, Transport, Installation	Dry	94	C

Study Case A was judged as the case where the construction period is within 6 years, Study case B was judged as the case where the work period is 73 ~ 78 months that may be shortened by detail review, Study case C was judged as the case where the construction period is longer than 79 months that may be difficult to shorten it to be within the specified period.

From this table, Study Case (I) and (II) of 2-lift type are evaluated as A in both miter gate and rolling gate, Study Case (III) of 2-lift type and Study Case (I) and (II) of 3-lift type are evaluated as B, and Study Case (III) of 3-lift type is evaluated as C.

8.3 Formation of Construction

8.3.1 Formation of fabrication and installation

This paragraph will explain the scheme for constructing the new lock gate equipment. Since this project is a large-scale construction work attracting the world-wide attention, its formation must be considered on a worldwide scale. This project may be divided roughly into five pieces of formation as the frames of an international labor division network. (Refer to Table 8.3.1-1)

For the block installation at dry dock and installation, Panamanian constructors at the construction site shall be adopted as a major premise.

For adopting Panamanian constructors, supervisors shall be dispatched for installation supervision and execution management as a premise.

Key design (detail design) shall be executed by ACP in any formation as a premise.

Table 8.3.1-1 Scheme of the New Lock Construction Project

	a	b	c	d	e
Key design (Detail Design)	ACP				
Design (Shop Drawing)	Japan (Asia)	U.S.	Europe	Latin America	Panama
Fabrication	Japan (Asia)	U.S.	Europe	Latin America	Panama
Block Installation at Dry Dock	Panama SV dispatch from Japan.	Panama SV dispatch from U.S.	Panama SV dispatch from Europe.	Panama SV dispatch from Latin America.	Panama
Installation	Panama SV dispatch from Japan.	Panama SV dispatch from U.S.	Panama SV dispatch from Europe.	Panama SV dispatch from Latin America.	Panama

8.3.2 Selection of the formation of fabrication

We have surveyed Latin American vendors in the course of constructing the frames of the international division of labor network.

Table 8.3.2-2 shows the survey results of Latin American vendors.

It should be understood that the vendors' capabilities described in the table show those at present and these capabilities may be improved in future.

For makers in nearby countries, we have sent engineers and surveyed their fabrication and installation capabilities by means of hearing using questionnaires.

Major survey items about the fabrication and installation contractors' capabilities are the same as those in Chapter 3.

We have selected contractors based on ACP's introduction and the data base being possessed by the procurement division of the survey group.

We have executed these surveys after obtaining ACP's approval.

- M-2-1: MAUA-JURONG

This company having its plant in Rio de Janeiro, Brazil has overcome the unprecedented shipbuilding crisis owing to the capital participation of Jurong Co., in Singapore 2 years ago, and it is in operation by receiving orders of marine devices (MODEC, etc.) for developing the submarine oil field now being progressed by PETROBRAS. This company shows a positive disposition to take part in the Panama Canal extension work and has a strong desire to join in the execution work.

Technological capabilities of this company are judged as enough to fabricate the gate leaf of the Panama Canal. Also, the miter gate and rolling gate can be executed to be one unit on the slipway of this company on the presumption that the draft problem of the rolling gate is soluble.

For the fabrication period, detail review will be necessary in the execution stage of the work.

- M-2-2: ALSTOM

This company has its plant in the suburbs of Sao Paulo. However, we have failed in concluding a secrecy obligation contract due to a Panamanian legal problem and we could not obtain any estimate of this company. However, this company takes a warm interest in the Panama Canal Expansion Project and it signified its intention to take part in the work by all means.

This company is a comprehensive heavy industrial maker in the fields of energy and transportation. We visited in its generator works and steel structures

manufacturing works. These works were clean, modern, and well-controlled, and its high technical level is estimable.

Also, we have confirmed temporary assembly conditions of radial gates and slide gates. We can judge that the experiences and fabrication technology on water gates are acceptable.

For the gates of the Panama Canal, their block fabrication can be done without any trouble. However, since its works is positioned inland, one-unit fabrication is impossible in the works because of the transportation problem. In Study Case (II) and (III), the fabrication in this company is selectable. In case of Study Case (I), however, the security of an assembly yard adjacent to the sea becomes necessary for one-unit fabrication.

Table8.3.2.-1 Research of Latin American vender's abilities

No.		M-2-1	M-2-2	M-2-3	M-2-4
Company's name		Maua-Jurong	ALSTOM	Consorcio Industrial	Venezuelan Heavy Industries C.A.
Country		Brazil	Brazil	Mexico	Venezuela
Number of Employees of each section	Design	3545			More than 550
	Manufacturing				
	Construction				
	QA/QC				
Main Products		Ship & Rig Repair, Offshore design and construction, Ship design and building		Heat exchangers, pressure vessels, reactors, tanks, low temperature and cryogenic storage systems	Buildings, bridges, tanks, Pressure vessels, towers, gates for dams, aluminum reduction pots, warehouses, pipe racks, etc.
Name of Several Major Customers				Pemex, Fertimex, C.F.E, Bariven, Cigsa, Sunkyong, Bidypsa, ICA-F.D., Tiasa	Pequiven / Interbeton consortium Aluar, Constructora N. Odebretch, Mantex, Contrina-Sincor etc.
Supply List of Hydraulic Gate Item		non		non	Radial gate, etc.
Certification and/or Qualification (ISO etc.)		ISO9001, ISO14000 OHSAS18001		ASME U, U2 and S Stamps	ISO9002 ASME U, U2, R, S and PP Stamps
Welder & Welding Procedure Qualification		AWS etc.		ASME	AWS etc.
NDT Personnel & NDT Procedure Qualification					
Facility (m^2)	Manufacturing Area	———			38,089m^2
	Office Area	———			Included in above figures
	Other Area	———			426,411m^2
	Total Area	334,000 m^2		92,900 m^2	464,500m^2
Annual production (ton/Year)		24,000 tons/year			20,000 tons/year (average for ten years)
Evaluation Advisability of Fabrication or Installation	Present condition	A			A
	The future	A			A
Remark					

Please refer to the attached data on venders' catalogs in detail.

Table 8.3.2-3 shows the realizable scheme of the study cases based on these survey results.

Table 8.3.2-3 Scheme of New Lock Construction Project

		a			b			c			d			e		
Design & Fabrication		Japan (Asia)			U.S.			Europe			Latin America			Panama		
Block Installation at Dry Dock		Panama SV dispatch from Japan.			Panama SV dispatch from U.S.			Panama SV dispatch from Europe.			Panama SV dispatch from Latin America			Panama		
Installation		Panama SV dispatch from Japan.			Panama SV dispatch from U.S.			Panama SV dispatch from Europe.			Panama SV dispatch from Latin America.			Panama		
Port		Pacific Side			Atlantic or Pacific Side			Atlantic Side			Atlantic Side			–		
Evaluation	Miter Gate	(I)	(II)	(III)	(I)	(II)	(III)	(I)	(II)	(III)	(I)	(II)	(III)	(I)	(II)	(III)
		A	C	A	A	C	A	A	C	A	C	C	A	C	C	C
	Rolling Gate	(I)	(II)	(III)	(I)	(II)	(III)	(I)	(II)	(III)	(I)	(II)	(III)	(I)	(II)	(III)
		B	C	A	B	C	A	B	C	A	C	C	A	C	C	C

Panamanian contractors were evaluated as C because they have no results of manufacturing any large-scale gate equipment and the design and fabrication are judged as difficult for them.

For Study case (II), they were evaluated as C because their adoption is difficult due to the dry dock width and draft conditions.

Japanese (Asian), American, European, and Latin American makers are capable of adopting Study Case (I) and (III) methods. However, the bearing must be verified for Study Case (I) of rolling gate.

We will describe the ports for shipping the products.
Japanese makers have a port on the Pacific Ocean side, while European and Latin American makers have a port on the Atlantic Ocean side.
Also, US makers have a port on the Pacific Ocean and Atlantic Ocean sides to be ready for shipment.
When one-unit transportation is done by Japanese makers to the site on the Atlantic Ocean side or when it is done by European and Latin American mak-

ers to the site on the Pacific Ocean side, the passage through the existing Panama Canal is difficult, so that products must be transported via the Cape of Good Hope to result in considerable transportation period and costs
The priority of fabrication places at site must also be taken into account.

For the block transportation in Study case (III), no problem will arise because the transportation can be done through the Panama Canal and harbor facilities are provided on both Pacific Ocean and Atlantic Ocean sides.

It is necessary to review makers' fabrication capabilities, etc. through their survey before ordering, irrespective of which the Study Case is adopted.

9. Cost Estimates for New Lock Gates

Chapter 9 Cost Estimates for New Lock Gates

This chapter describes the construction costs of the gate equipment only inclusive of the embedded frames, hoisting device, and control system.

Also, this chapter calculates the maintenance costs for 100 years after construction and describes the life cycle costs inclusive of the maintenance costs.

W estimated the construction costs by using in-house data of the Study Team based on the concept design data received from ACP.

We estimated the installation costs and the transportation costs in Panama based on the internal unit prices in Panama.

The estimate conditions are as specified below.

US dollar rate: 115 yen/US $

Out of the scope of estimate:

Civil engineering costs, insurance fee, and taxes

We estimated the operation device based on acquired data.

For the estimate contents, refer to the Attachment at the end of this chapter.

9.1 Comparison of Cost Estimate for Miter Gate

Table 9.1-1 shows the comparison table of cost estimate for miter gate.

Also, Fig.9.1-1 ~ Fig.9.1-3 show the graphs obtained from the table.

Table 9.1-1 Comparison table of Cost Estimate for Miter Gate

Unit: Million US$

Lift Type		2-Lift			3-Lift		
Study Case		(I)	(II)	(III)	(I)	(II)	(III)
Initial Cost	Design	3.9	4.3	4.4	4.0	4.3	4.3
	Fabrication	158.1	119.1	120.6	185.2	141.8	140.2
	Installation	11.4	41.1	34.5	12.4	45.0	36.6
	Transportation	11.5	10.5	10.5	13.4	13.9	13.9
	Total	184.9	175.0	170.0	215.0	205.0	195.0

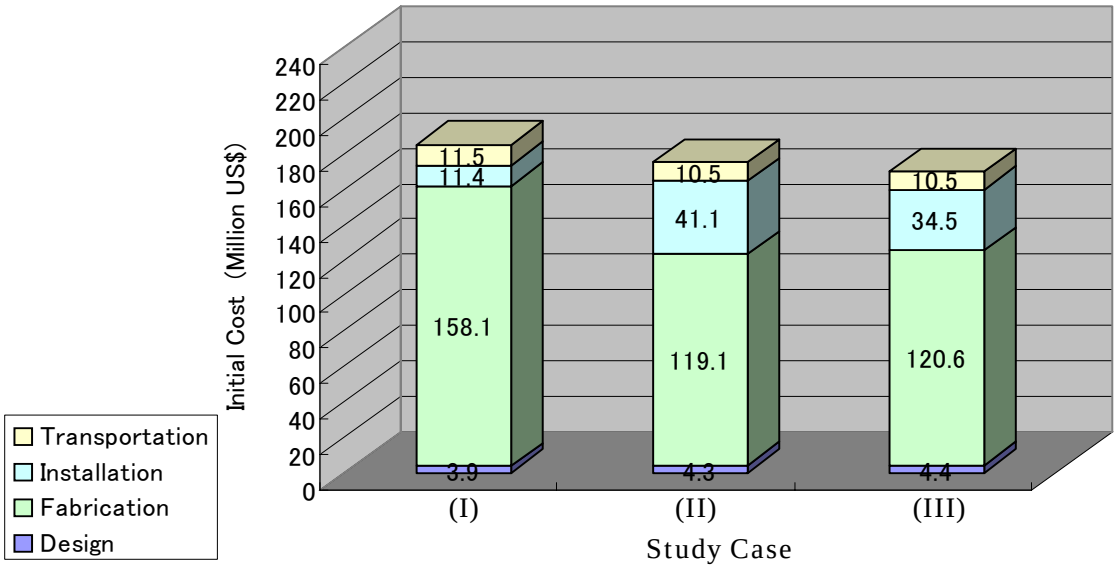

Fig. 9.1-1 Comparision table of Cost Estimate for 2-Lift Type Miter Gate

We will compare the costs of the 2-lift miter gate. From this figure, we can point out the following items.

- In Study Case (I), the miter gate is integrated to be one unit in a works. As a result, its fabrication cost becomes expensive as compared with the block fabrication in Study Case (II) and (III), and it occupies about 86% of the entire cost. However, the installation cost is cheap because it is mainly occupied by the carry-in cost to the specified position, and it occupies about 6% of the entire cost. In case of one-unit transport, the transportation means is limited to cause a comparatively high cost as compared with Study Case (II) and (III).

- In Study Case (II) and (III), blocks are integrated to be one unit in a dry dock or at site to cause the installation cost to be expensive as compared with Study Case (I). The installation work cost occupies a little over 20%, and it increases to 3 ~ 4 times as compared with Study Case (I).

- In Study Case (II), the fabrication cost is almost equal to that in Study Case (III). However, since a dry dock is used for this fabrication, it becomes expensive more or less due to the rental fee of the dock, and others.

- In Study Case (II) and (III), the design cost is as high as10%, because the number of drawings increases due to many fabrication blocks in Study Case (II) and (III)

- When comparing the total amounts of the construction costs in 3 cases with each other, Study Case (I) is the most expensive, while Study Case (III) is the cheapest. However, this difference is about 10%.

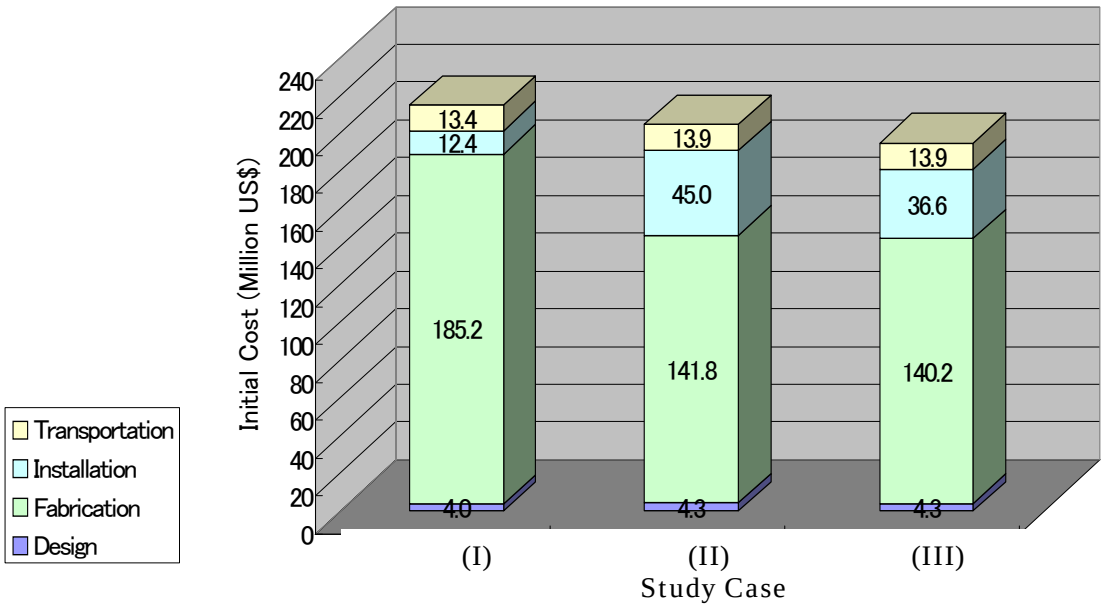

Fig. 9.1-2 Comparision table of Cost Estimate for 3-Lift Type Miter Gate

We will compare the costs of the 3-lift miter gate. From this figure, we can point out the following items.

- In Study Case (I), the miter gate is integrated to be one unit in a works. As a result, its fabrication cost is expensive as compared with the block fabrication in Study Case (II) and (III), and it occupies about 86% of the entire cost. However, the installation cost is cheap because it is mainly occupied by the carry-in cost to the specified position, and it occupies about 6% of the entire cost. In case of one-unit transport, the transportation means is limited to cause a comparatively high cost as compared with Study Case (II) and (III).
- In Study Case (II) and (III), blocks are integrated to be one unit in a dry dock or at site to cause the installation cost to be expensive as compared with Study Case (I). The installation work cost occupies a little over 20%, and it increases to 3 ~ 4 times as compared with Study Case (I).
- In Study Case (II), the fabrication cost is almost equal to that in Study case (III). However, since a dry dock is used for this fabrication, it becomes expensive more or less due to the rental fee of the dock, and others.
- In Study Case (II) and (III), the design cost is as high as10%, because the number of drawings increases due to many fabrication blocks in Study Case (II) and (III).
- When comparing the total amounts of the construction costs in 3 cases with each other. Study Case (I) is the most expensive, while Study Case (III) is the cheapest. However, this difference is about 10%.
- These tendencies are the same as in 2-lift miter gate.

We will compare the costs of the 2-lift rolling gate. From this figure, we can point out the following items.

- In Study Case (I), the miter gate is integrated to be one unit in a works. As a result, its fabrication cost is expensive as compared with the block fabrication in Study Case (II) and (III), and it occupies about 86% of the entire cost. However, the installation cost is cheap because it is mainly occupied by the carry-in cost to the specified position, and it occupies about 6% of the entire cost. In case of one-unit transport, the transportation means is limited to cause a comparatively high cost as compared with Study Case (II) and (III).

- In Study Case (II) and (III), blocks are integrated to be one unit in a dry dock or at site to cause the installation cost to be expensive as compared with Study Case (I). The installation work cost occupies a little over 20%, and it increases to 3 ~ 4 times as compared with Study Case (I).

- In Study Case (II), the fabrication cost is almost equal to that in Study Case (III). However, since a dry dock is used for this fabrication, it becomes expensive more or less due to the rental fee of the dock, and others.

- In Study Case (II) and (III), the design cost is as high as10%, because the number of drawings increases due to many fabrication blocks in Study Case (II) and (III).

- When comparing the total amounts of the construction costs in 3 cases with each other. Study Case (I) is the most expensive, while Study Case (III) is the cheapest. However, this difference is about 10%.

- These tendencies are the same as those in the miter gate.

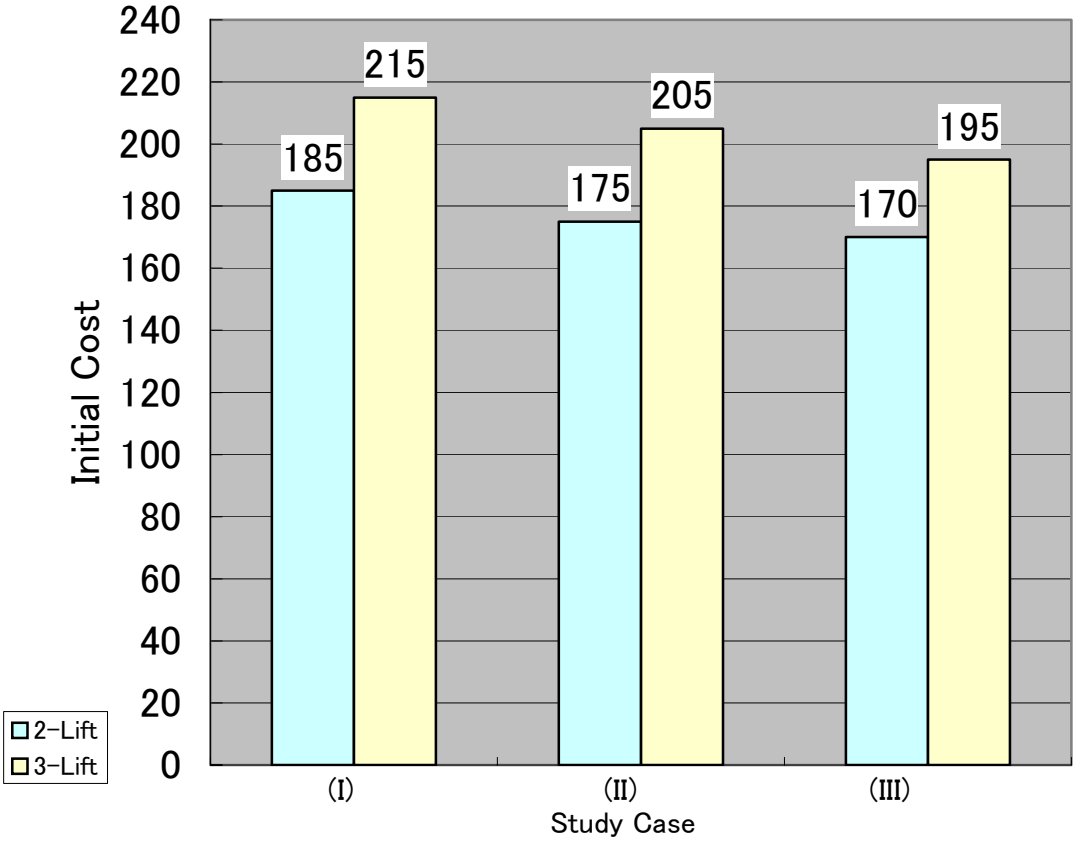

Fig. 9.1-3 Comparision table of Cost Estimate for 2,3-Lift Type Miter Gate

From this figure, we can point out the following items by comparing the costs of 2-lift and 3-lift types of miter gate with each other.

- Study Case (I) is the most expensive, while Study Case (III) is the cheapest. However, this difference is about 10% in both 2-lift and 3-lift types.

- When comparing the 2-lift and 3-lift types with each other, the construction cost is expensive in 3-lift type in all study cases, and its difference is about 16%. This difference is smaller than the difference (about 26%) of equipment weight. This fact shows that each gate is small in 3-lift type because of many gates so that the 3-lift type gate can be fabricated easier as compared with the 2-lift type gate.

9.2 Comparison of Cost Estimate for Rolling Gate

Table 9.2-1 shows the comparison table of cost estimate for rolling gate.

Also, Fig.9.2-1 ~ 3 show the graphs obtained from the table.

Table 9.2-1 Comparison table of Cost Estimate for Rolling Gate

Unit: Million US$

Lift Type		2-Lift			3-Lift		
Study Case		I	II	III	I	II	III
Initial Cost	Design	3.9	4.4	4.3	4.0	4.6	4.5
	Fabrication	167.6	130.6	128.7	192.3	150.4	148.9
	Installation	11.4	42.1	34.0	12.4	45.5	37.0
	Transportation	12.1	13.0	13.0	16.3	14.6	14.6
	Total	195.0	190.1	180.0	225.0	215.1	205.0

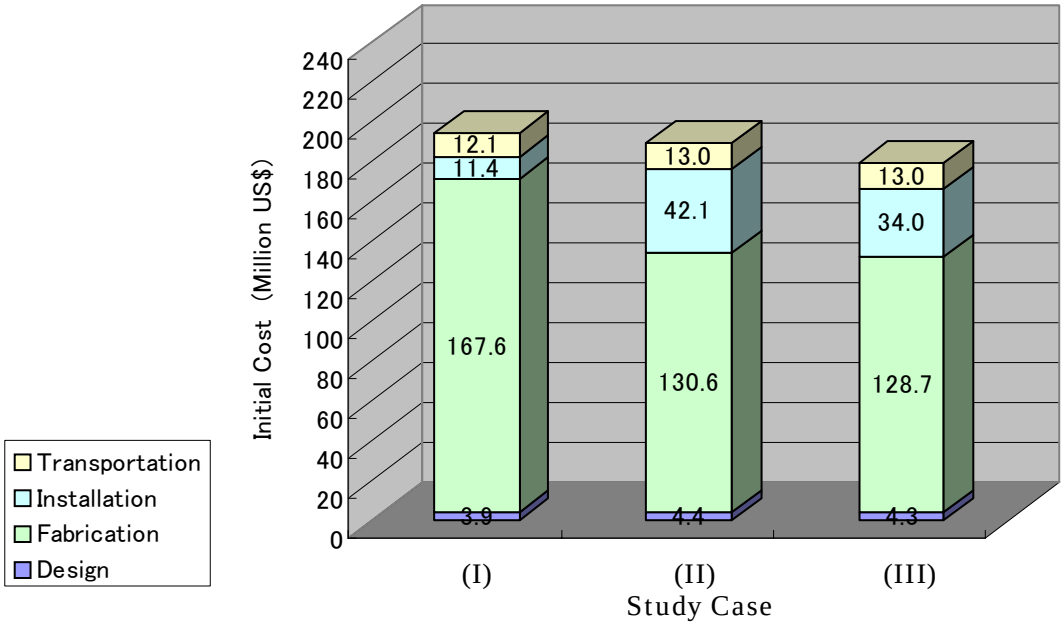

Fig. 9.2-1 Comparision table of Cost Estimate for 2-Lift Type Rolling Gate

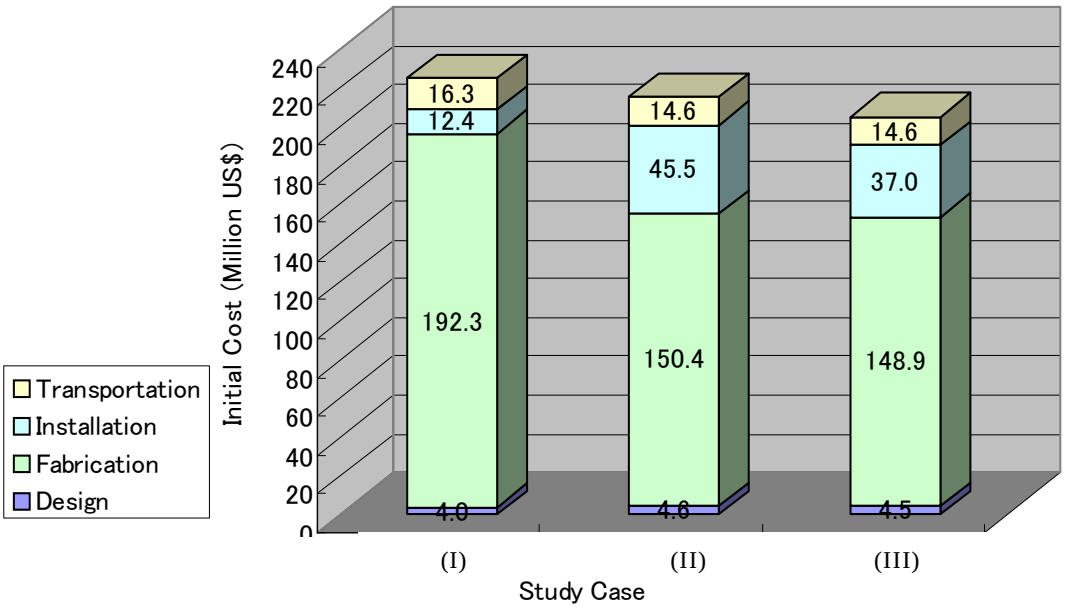

Fig. 9.2-2 Comparision table of Cost Estimate for 3-Lift Type Rolling Gate

We will compare the costs of the 3-lift rolling gate. From this figure, we can point out the following items.

- In Study Case (I), the miter gate is integrated to be one unit in a works. As a result, its fabrication cost is expensive as compared with the block fabrication in Study Case (II) and (III), and it occupies about 84% of the entire cost. However, the installation cost is cheap because it is mainly occupied by the carry-in cost to the specified position, and it occupies about 6% of the entire cost. In case of one-unit transport, the transportation means is limited to cause a comparatively high cost as compared with Study Case (II) and (III).
- In Study Case (II) and (III), blocks are integrated to be one unit in a dry dock or at site to cause the installation cost to be expensive as compared with Study Case (I). The installation work cost occupies a little over 20%, and it increases to 3 ~ 4 times as compared with Study Case (I).
- In Study case (II), the fabrication cost is almost equal to that in Study Case (III). However, since a dry dock is used for this fabrication, it becomes expensive more or less due to the rental fee of the dock, and others.
- In Study Case (II) and (III), the design cost is as high as10%, because the number of drawings increases due to many fabrication blocks in Study Case (II) and (III).
- When comparing the total amounts of the construction costs in 3 cases with each other. Study Case (I) is the most expensive, while Study Case (III) is the cheapest. However, this difference is about 10%.
- These tendencies are the same as those in the miter gate.

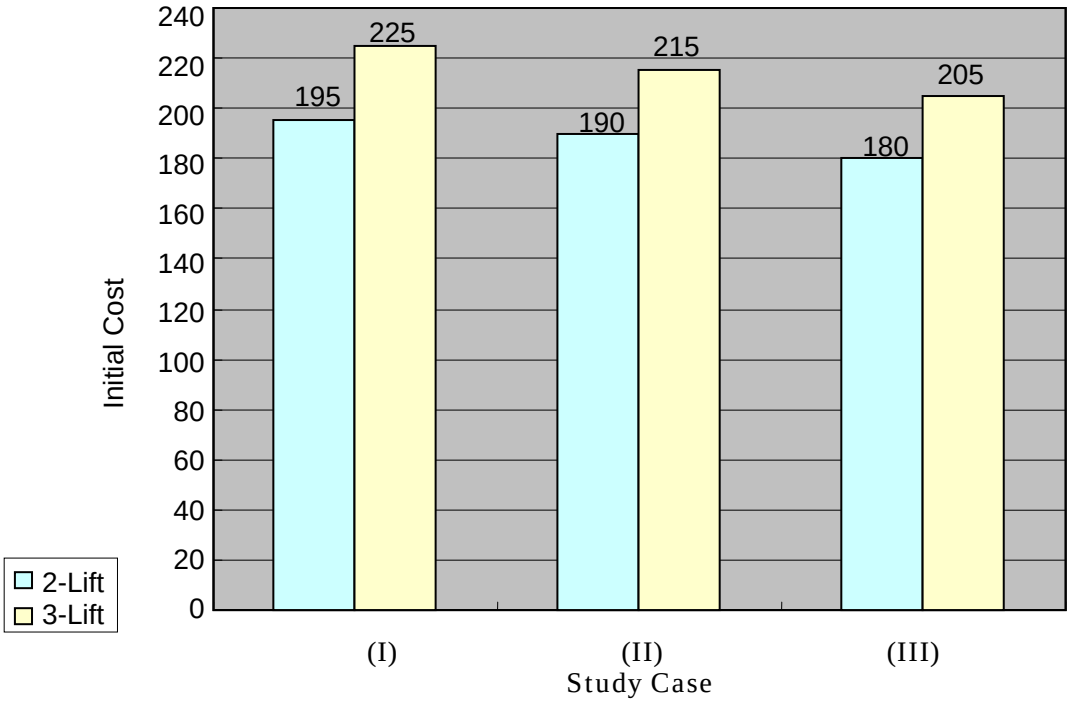

Fig. 9.2-3 Comparison Table of Cost Estimate for 2, 3-Lift Type Rolling Gate

From this figure, we can point out the following items by comparing the costs of 2-lift and 3-lift types of rolling gate with each other.

- Study Case (I) is the most expensive, while Study Case (III) is the cheapest. However, this difference is about 10% in both 2-lift and 3-lift types. This tendency is the same as in the miter gate.

- When comparing the 2-lift and 3-lift types with each other, the construction cost is expensive in 3-lift type in all study cases, and its difference is about 16%. This difference is almost equal to the difference (about 15%) of equipment weight.
  In case of the miter gate, 3-lift type can be fabricated easier as compared with the 2-lift type. In case of the rolling gate, on the other hand, the fabrication efficiency remains unchanged in the 2-lift type and 3-lift type.

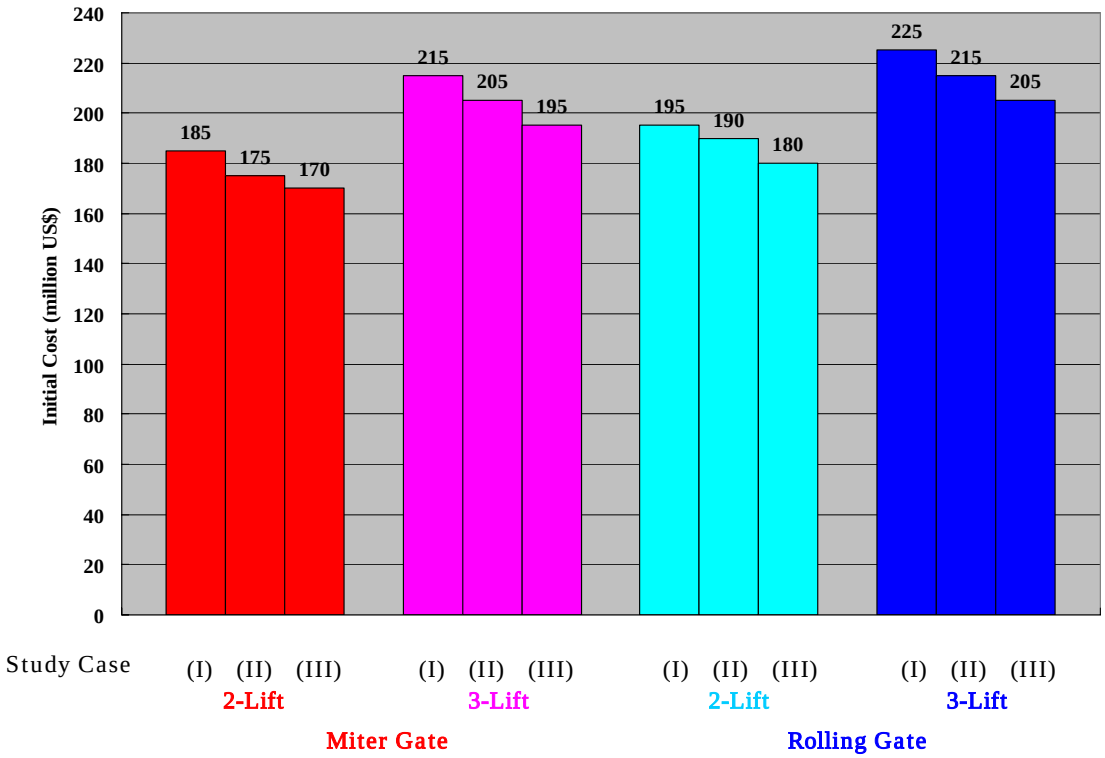

Fig. 9.2-3 Comparison Table of Cost Estimate for 2 & 3-Lift Type Miter Gate

- In case of the miter gate, the minimum cost is 170 million dollar.
  (2-lift, Study Case (III)), the maximum cost is 215 million dollar.
  (3-lift, Study Case (I)), and its difference is 45 million dollar.
  In case of the rolling gate, the minimum cost is 180 million dollar.
  (2-lift, Study Case (III)), the maximum cost is 225 million dollar.
  (3-lift, Study Case (I)), and its difference is 45 million dollar.

- When comparing the miter gate and rolling gate with each other, the cost of the rolling gate is higher than the cost of the miter gate in both 2-lift type and 3-lift type. When comparing the 2-lift type and 3-lift type with each other, the cost of the 3-lift type becomes higher because the number of gates is more in the 3-lift type than in the 2-lift type.

- When comparing the 2-lift type and 3-lift type with each other, the 3-lift type is characterized with easier fabrication and transportation because of its small gates although the number of gates is more than that of 2-lift type.

- When comparing Study Case (I) with study Case (II), (III), the former is slightly expensive, while the latter is slightly cheap. Also, Study Case (III) is cheaper as compared with the other cases.

9.3 Lift Cycle Cost of New Lock Gates

This section describes the life cycle cost.
The lift cycle cost is obtained by adding the maintenance cost for 100 years after the construction to the initial cost.

The life cycle cost is obtained by the following calculation formula.

Calculation formula

$$LCC = I_0 + \sum_{n=m}^{k} R(n) \cdot G(n) = I_0 + \sum_{n=m}^{k} C(n) \cdot R(0) \cdot G(n) = I_0 + \sum_{n=m}^{k} \frac{R(0) \cdot (1+C)^n}{(1+i)^n}$$

where,	I_0	:	Initial cost
	$R(0)$	:	Maintenance cost
	C	:	Price rise ratio (2.0%)
	i	:	Interest ratio (4.5%)
	$R(n)=C(n)\times R(0)$	:	Maintenance Cost at the n-th year
	$C(n)=(1+C)^n$	:	Price rise ratio at the n-th year
	$G(n)=1/(1+i)^n$	:	Cost conversion coefficient at the construction

This study was executed for 2-lift type and 3-lift type of the miter gate and rolling gate.

These calculation results of the miter gate and rolling gate are shown on and after the next pages.

Life Cycle Cost of Miter Gate;2-Lift

1. Study Condition

We estimated it based on In-House Data of MHI.
And, as for the cost of Installation and Inland Transportation in panama , it was estimated based on the Panamanian domestic unit price.
Estimate conditions
Scope of Cost Estimate
- Lock Gate equipment only
  Gate leaves, embedded frames, hoisting devices, and control system.

Out of the scope
- Civil Works
- Insurance fees and taxes

- US dollar rate is presumed as 115JP¥ / 1US$
- Useful life :100 years

2. Renewal and Maintenance Interval

Maintenance Cost Estimate for Miter Gate Unit: Million US$

	Maintenance Item	Interval	Frequency	Unit Price	Qtty. St	Total Cost	Remark
Gate Leaf	Maintenance						
	Seal Parts etc	5 Year	19 time	0.01	2	0.020	for M-D1
	Seal Parts etc	5 Year	19 time	0.01	4	0.040	for M-D2d,D3d
	Re-Place						
	Re-Coating	15 Year	6 time	2.35	2	4.700	for M-D1
	Re-Coating	15 Year	6 time	3.63	4	14.520	for M-D2d,D3d
	Seal Parts etc	15 Year	6 time	0.64	2	1.280	for M-D1
	Seal Parts etc	15 Year	6 time	0.82	4	3.290	for M-D2d,D3d
	Removal & Installation etc	15 Year	6 time	3.20	6	19.200	include crane, tugboats and maintenance yard cost.
Pintle	Re-Place						
	Pintle etc	15 Year	6 time	0.20	6	1.200	
Operating Device	Maintenance						
	Bush etc	5 Year	19 time	0.04	6	0.240	
	Re-Place						
	Oil	5 Year	19 time	0.50	6	3.000	
	Packing etc	10 Year	9 time	0.12	6	0.720	
	Operating Device	20 Year	4 time	9.22	1	9.220	
Control Device	Maintenance						
	PC, PLC Etc	5 Year	19 time	0.25	1	0.250	
	Re-Place						
	Control Device	40 Year	2 time	1.64	1	1.640	

3. Initial Cost

It shall be refer to chapters 9 about initial cost .

Unit: Million US$

Lift Type	2-Lift		
Study Case	I	II	III
Design	3.9	4.3	4.4
Fabrication	158.1	119.1	120.6
Installation	11.4	41.1	34.5
Transportation	11.5	10.5	10.5
Total	185.0	175.0	170.0

4. Life cycle cost

Caluculation formula

$$LCC = I_0 + \sum_{n=m}^{k} R(n)\cdot G(n) = I_0 + \sum_{n=m}^{k} C(n)\cdot R(0)\cdot G(n) = I_0 + \sum_{n=m}^{k} \frac{R(0)\cdot(1+C)^n}{(1+i)^n}$$

where,
- I_0 : Initial cost
- R(0) : Maintenance cost
- C : Price rise ratio 2.0 %
- i : Interest ratio 4.5 %
- $R(n) = C(n) \times R(0)$: Maintenance Cost at the n-th year
- $C(n) = (1+C)^n$: Price rise ratio at the n-th year
- $G(n) = 1/(1+i)^n$: Cost conversion coefficient at the construction

Life Cycle Cost Estimate for Miter Gate;2-Lift

Unit: Million US$

2-Lift Type Miter Gate															
(year)	Maintenance				Replacing				Sub Total	C(n)	G(n)	Equivalent	Sub total		
	Gate Leaf	Pintle	Operating Device	Control Device	Gate Leaf	Pintle	Operating Device	Control Device					Study Case (I)	Study Case (II)	Study Case (III)
0	Initial Cost								—	1.000	1.000	—	185	175	170
5	0.060	0	0.240	0.250			3.000		3.550	1.104	0.802	4	189	179	174
10	0.060	0	0.240	0.250			3.720		4.270	1.219	0.644	4	193	183	178
15	0.060	0	0.240	0.250	42.990	1.200	3.000		47.740	1.346	0.517	34	227	217	212
20	0.060	0	0.240	0.250			9.220		9.770	1.486	0.415	7	234	224	219
25	0.060	0	0.240	0.250			3.000		3.550	1.641	0.333	2	236	226	221
30	0.060	0	0.240	0.250	42.990	1.200	3.720		48.460	1.811	0.267	24	260	250	245
35	0.060	0	0.240	0.250			3.000		3.550	2.000	0.214	2	262	252	247
40	0.060	0	0.240	0.250			9.220	1.640	11.410	2.208	0.172	5	267	257	252
45	0.060	0	0.240	0.250	42.990	1.200	3.000		47.740	2.438	0.138	17	284	274	269
50	0.060	0	0.240	0.250			3.720		4.270	2.692	0.111	2	286	276	271
55	0.060	0	0.240	0.250			3.000		3.550	2.972	0.089	1	287	277	272
60	0.060	0	0.240	0.250	42.990	1.200	9.220		53.960	3.281	0.071	13	300	290	285
65	0.060	0	0.240	0.250			3.000		3.550	3.623	0.057	1	301	291	286
70	0.060	0	0.240	0.250			3.720		4.270	4.000	0.046	1	302	292	287
75	0.060	0	0.240	0.250	42.990	1.200	3.000		47.740	4.416	0.037	8	310	300	295
80	0.060	0	0.240	0.250			9.220	1.640	11.410	4.875	0.030	2	312	302	297
85	0.060	0	0.240	0.250			3.000		3.550	5.383	0.024	1	313	303	298
90	0.060	0	0.240	0.250	42.990	1.200	3.720		48.460	5.943	0.019	6	319	309	304
95	0.060	0	0.240	0.250			3.000		3.550	6.562	0.015	1	320	310	305
100	0.060	0	0.240	0.250								0	320	310	305

Total Maintenance Cost	135	135	135

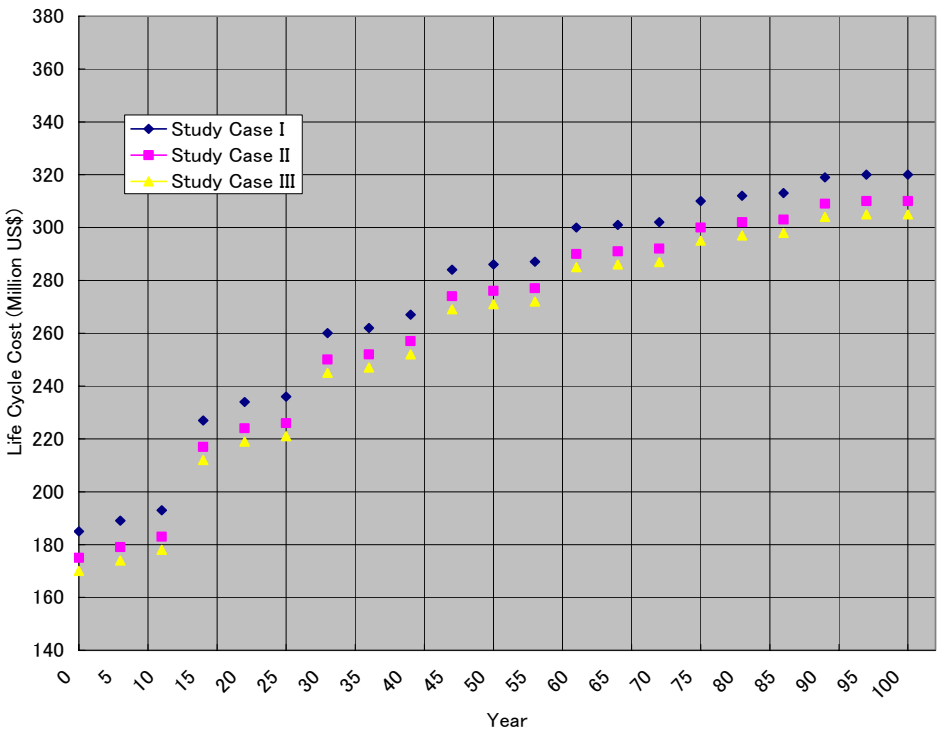

Fig. 9.3-1 Life Cycle Cost Estimate of 2-lift type Miter Gate

Life Cycle Cost of Miter Gate;3-Lift

1. Study Condition

We estimated it based on In-House Data of MHI.
And, as for the cost of Installation and Inland Transportation in panama , it was estimated based on the Panamanian domestic unit price.
Estimate conditions
Scope of Cost Estimate
・Lock Gate equipment only
Gate leaves, embedded frames, hoisting devices, and control system.
Out of the scope
・Civil Works
・Insurance fees and taxes
・US dollar rate is presumed as 115JP¥ ／ 1US$
・Useful life :100 years

2. Renewal and Maintenance Interval

Maintenance Cost Estimate for Miter Gate Unit: Million US$

	Maintenance Item	Interval	Frequency	Unit Price	Qtty. St	Total Cost	Remark
Gate Leaf	Maintenance						
	Seal Parts etc	5 Year	19 time	0.01	2	0.020	for M-T1
	Seal Parts etc	5 Year	19 time	0.01	6	0.060	for M-T2d,T3d,T4d
	Re-Place						
	Re-Coating	15 Year	6 time	2.35	2	4.700	for M-T1
	Re-Coating	15 Year	6 time	2.79	6	16.740	for M-T2d,T3d,T4d
	Seal Parts etc	15 Year	6 time	0.64	2	1.280	for M-T1
	Seal Parts etc	15 Year	6 time	0.76	6	4.575	for M-T2d,T3d,T4d
	Removal & Installation etc	15 Year	6 time	3.20	6	19.200	include crane, tugboats and maintenance yard cost.
Pintle	Re-Place						
	Pintle etc	15 Year	6 time	0.20	8	1.600	
Operating Device	Maintenance						
	Bush etc	5 Year	19 time	0.04	8	0.320	
	Re-Place						
	Oil	5 Year	19 time	0.50	8	4.000	
	Packing etc	10 Year	9 time	0.12	8	0.960	
	Operating Device	20 Year	4 time	12.30	1	12.300	
Control Device	Maintenance						
	PC, PLC Etc	5 Year	19 time	0.33	1	0.330	
	Re-Place						
	Control Device	40 Year	2 time	1.94	1	1.940	

3. Initial Cost

It shall be refer to chapters 9 about initial cost .

Unit: Million US$

Lift Type	3-Lift		
Study Case	I	II	III
Design	4.0	4.3	4.3
Fabrication	185.2	141.8	140.2
Installation	12.4	45.0	36.6
Transportation	13.4	13.9	13.9
Total	215.0	205.0	195.0

4. Life cycle cost

Caluculation formula

$$LCC = I_0 + \sum_{n=m}^{k} R(n)\cdot G(n) = I_0 + \sum_{n=m}^{k} C(n)\cdot R(0)\cdot G(n) = I_0 + \sum_{n=m}^{k} \frac{R(0)\cdot(1+C)^n}{(1+i)^n}$$

where,
I_0 : Initial cost
R(0) : Maintenance cost
C : Price rise ratio 2.0 %
i : Interest ratio 4.5 %
$R(n)=C(n)\times R(0)$: Maintenance Cost at the n-th year
$C(n)=(1+C)^n$: Price rise ratio at the n-th year
$G(n)=1/(1+i)^n$: Cost conversion coefficient at the construction

Life Cycle Cost Estimate for Miter Gate;3-Lift

Unit: Million US$

3-Lift Type Miter Gate															
(year)	Maintenance				Replacing				Sub Total	C(n)	G(n)	Equivalent	Sub total		
	Gate Leaf	Pintle	Operating Device	Control Device	Gate Leaf	Pintle	Operating Device	Control Device					Study Case I	Study Case II	Study Case III
0	Initial Cost								—	1.000	1.000	—	215	205	195
5	0.080	0	0.320	0.330			4.000		4.730	1.104	0.802	5	220	210	200
10	0.080	0	0.320	0.330			4.960		5.690	1.219	0.644	5	225	215	205
15	0.080	0	0.320	0.330	46.495	1.600	4.000		52.825	1.346	0.517	37	262	252	242
20	0.080	0	0.320	0.330			12.300		13.030	1.486	0.415	9	271	261	251
25	0.080	0	0.320	0.330			4.000		4.730	1.641	0.333	3	274	264	254
30	0.080	0	0.320	0.330	46.495	1.600	4.960		53.785	1.811	0.267	27	301	291	281
35	0.080	0	0.320	0.330			4.000		4.730	2.000	0.214	3	304	294	284
40	0.080	0	0.320	0.330			12.300	1.940	14.970	2.208	0.172	6	310	300	290
45	0.080	0	0.320	0.330	46.495	1.600	4.000		52.825	2.438	0.138	18	328	318	308
50	0.080	0	0.320	0.330			4.960		5.690	2.692	0.111	2	330	320	310
55	0.080	0	0.320	0.330			4.000		4.730	2.972	0.089	2	332	322	312
60	0.080	0	0.320	0.330	46.495	1.600	12.300		61.125	3.281	0.071	15	347	337	327
65	0.080	0	0.320	0.330			4.000		4.730	3.623	0.057	1	348	338	328
70	0.080	0	0.320	0.330			4.960		5.690	4.000	0.046	2	350	340	330
75	0.080	0	0.320	0.330	46.495	1.600	4.000		52.825	4.416	0.037	9	359	349	339
80	0.080	0	0.320	0.330			12.300	1.940	14.970	4.875	0.030	3	362	352	342
85	0.080	0	0.320	0.330			4.000		4.730	5.383	0.024	1	363	353	343
90	0.080	0	0.320	0.330	46.495	1.600	4.960		53.785	5.943	0.019	7	370	360	350
95	0.080	0	0.320	0.330			4.000		4.730	6.562	0.015	1	371	361	351
100	0.080	0	0.320	0.330								0	371	361	351

Total Maintenance Cost	156	156	156

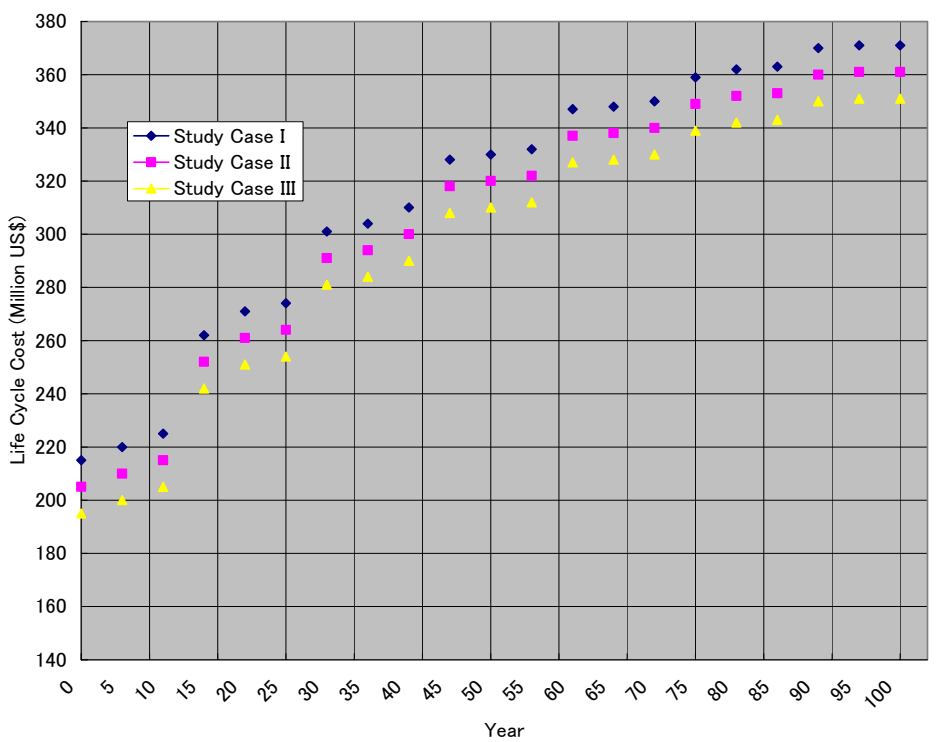

Fig. 9.3-2 Life Cycle Cost Estimate of 3-lift type Miter Gate

Life Cycle Cost of New lock Gate

1. Study Condition

We estimated it based on In-House Data of MHI.
And, as for the cost of Installation and Inland Transportation in panama , it was estimated based on the Panamanian domestic unit price.
Estimate conditions
Scope of Cost Estimate
・Lock Gate equipment only
Gate leaves, embedded frames, hoisting devices, and control system.
Out of the scope
・Civil Works
・Insurance fees and taxes
・US dollar rate is presumed as 115JP¥ /1US$
・Useful life :100 years

2. Renewal and Maintenance Interval

Maintenance Cost Estimate for Rolling Gate Unit: Million US$

	Maintenance Item	Interval	Frequency	Unit Price	Qtty St	Total Cost	Remark
Gate Leaf	Maintenance						
	Seal Parts etc	5 Year	19 time	0.01	2	0.020	for R-D1
	Seal Parts etc	5 Year	19 time	0.01	2	0.020	for R-D2
	Seal Parts etc	5 Year	19 time	0.01	2	0.020	for R-D3d
	Re-Place						
	Re-Coating	15 Year	6 time	2.40	2	4.800	for R-D1
	Re-Coating	15 Year	6 time	3.73	2	7.460	for R-D2
	Re-Coating	15 Year	6 time	3.84	2	7.680	for R-D3d
	Seal Parts etc	15 Year	6 time	0.48	2	0.958	for R-D1
	Seal Parts etc	15 Year	6 time	0.59	2	1.188	for R-D2
	Seal Parts etc	15 Year	6 time	0.88	2	1.755	for R-D3d
Upper and Lower Wagon	Maintenance						
	Bearing etc	5 Year	19 time	0.05	6	0.300	
	Re-Place						
	Upper Wagon	50 Year	1 time	1.00	6	6.000	
	Lower Wagon	15 Year	6 time	0.20	6	1.200	
	Rails	30 Year	3 time	1.00	6	6.000	
Operating Device	Maintenance						
	Operating Device	5 Year	19 time	0.30	6	1.800	
	Re-Place						
	Wire Rope	10 Year	9 time	0.50	6	3.000	
	Operating Device	20 Year	4 time	13.70	1	13.700	
Control Device	Maintenance						
	PC, PLC Etc	5 Year	19 time	0.25	1	0.250	
	Re-Place						
	Control Device	40 Year	2 time	1.64	1	1.640	

3. Initial Cost

It shall be refer to chapters 9 about initial cost .

Unit: Million US$

Lift Type	2-Lift		
Study Case	I	II	III
Design	3.9	4.4	4.3
Fabrication	167.6	130.6	128.7
Installation	11.4	42.1	34.0
Transportation	12.1	13.0	13.0
Total	195.0	190.0	180.0

3. Life Cycle Cost

Caluculation formula

$$LCC = I_0 + \sum_{n=m}^{k} R(n)\cdot G(n) = I_0 + \sum_{n=m}^{k} C(n)\cdot R(0)\cdot G(n) = I_0 + \sum_{n=m}^{k} \frac{R(0)\cdot(1+C)^n}{(1+i)^n}$$

where,
I_0 : Initial cost
R(0) : Maintenance cost
C : Price rise ratio 2.0 %
i : Interest ratio 4.5 %
$R(n) = C(n) \times R(0)$: Maintenance Cost at the n-th year
$C(n) = (1+C)^n$: Price rise ratio at the n-th year
$G(n) = 1/(1+i)^n$: Cost conversion coefficient at the construction

Life Cycle Cost Estimate for Rolling Gate;2-Lift

Unit: Million US$

2-Lift Type Rolling Gate															
(year)	Maintenance				Replacing				Sub Total	C(n)	G(n)	Equivalent	Sub total		
	Gate Leaf	Wagon	Operating Device	Control Device	Gate Leaf	Wagon	Operating Device	Control Device					Study Case (I)	Study Case (II)	Study Case (III)
0	Initial Cost								—	1.000	1.000	—	195	190	180
5	0.060	0.300	1.800	0.250					2.410	1.104	0.802	3	198	193	183
10	0.060	0.300	1.800	0.250			3.000		5.410	1.219	0.644	5	203	198	188
15	0.060	0.300	1.800	0.250	23.840	1.200			27.450	1.346	0.517	20	223	218	208
20	0.060	0.300	1.800	0.250			13.700		16.110	1.486	0.415	10	233	228	218
25	0.060	0.300	1.800	0.250					2.410	1.641	0.333	2	235	230	220
30	0.060	0.300	1.800	0.250	23.840	7.200	3.000		36.450	1.811	0.267	18	253	248	238
35	0.060	0.300	1.800	0.250					2.410	2.000	0.214	2	255	250	240
40	0.060	0.300	1.800	0.250			13.700	1.640	17.750	2.208	0.172	7	262	257	247
45	0.060	0.300	1.800	0.250	23.840	1.200			27.450	2.438	0.138	10	272	267	257
50	0.060	0.300	1.800	0.250		6.000	3.000		11.410	2.692	0.111	4	276	271	261
55	0.060	0.300	1.800	0.250					2.410	2.972	0.089	1	277	272	262
60	0.060	0.300	1.800	0.250	23.840	7.200	13.700		47.150	3.281	0.071	11	288	283	273
65	0.060	0.300	1.800	0.250					2.410	3.623	0.057	1	289	284	274
70	0.060	0.300	1.800	0.250			3.000		5.410	4.000	0.046	1	290	285	275
75	0.060	0.300	1.800	0.250	23.840	1.200			27.450	4.416	0.037	5	295	290	280
80	0.060	0.300	1.800	0.250			13.700	1.640	17.750	4.875	0.030	3	298	293	283
85	0.060	0.300	1.800	0.250					2.410	5.383	0.024	1	299	294	284
90	0.060	0.300	1.800	0.250	23.840	7.200	3.000		36.450	5.943	0.019	5	304	299	289
95	0.060	0.300	1.800	0.250					2.410	6.562	0.015	1	305	300	290
100	0.060	0.300	1.800	0.250					2.410	7.245	0.012	1	306	301	291

Total Maintenance Cost	111	111	111

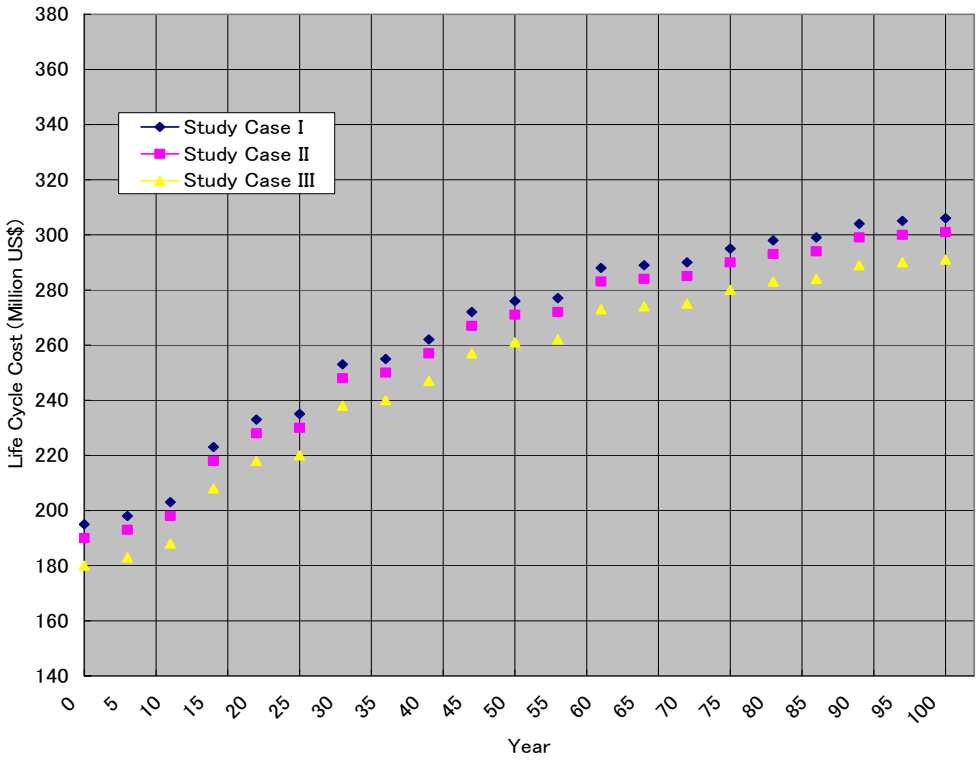

Fig.9.3-3 Life Cycle Cost Estimate of 2-lift type Rolling Gate

Life Cycle Cost of New lock Gate

1. Study Condition

We estimated it based on In-House Data of MHI.
And, as for the cost of Installation and Inland Transportation in panama , it was estimated based on the Panamanian domestic unit price.
Estimate conditions
Scope of Cost Estimate
・Lock Gate equipment only
Gate leaves, embedded frames, hoisting devices, and control system.
Out of the scope
・Civil Works
・Insurance fees and taxes
・US dollar rate is presumed as 115JP¥ /1US$
・Useful life :100 years

2. Renewal and Maintenance Interval

Maintenance Cost Estimate for Rolling Gate Unit: Million US$

	Maintenance Item	Interval	Frequency	Unit Price	Qtty St	Total Cost	Remark
Gate Leaf	Maintenance						
	Seal Parts etc	5 Year	19 time	0.01	2	0.020	for R-T1
	Seal Parts etc	5 Year	19 time	0.01	4	0.040	for R-T2,T3
	Seal Parts etc	5 Year	19 time	0.01	2	0.020	for R-T4d
	Re-Place						
	Re-Coating	15 Year	6 time	2.40	2	4.800	for R-T1
	Re-Coating	15 Year	6 time	3.21	4	12.840	for R-T2,T3
	Re-Coating	15 Year	6 time	3.34	2	6.680	for R-T4d
	Seal Parts etc	15 Year	6 time	0.48	2	0.958	for R-T1
	Seal Parts etc	15 Year	6 time	0.55	4	2.196	for R-T2,T3
	Seal Parts etc	15 Year	6 time	0.83	2	1.669	for R-T4d
Upper and Lower Wagon	Maintenance						
	Bearing etc	5 Year	19 time	0.05	8	0.400	
	Re-Place						
	Upper Wagon	50 Year	1 time	1.00	8	8.000	
	Lower Wagon	15 Year	6 time	0.20	8	1.600	
	Rails	30 Year	3 time	1.00	8	8.000	
Operating Device	Maintenance						
	Operating Device	5 Year	19 time	0.30	8	2.400	
	Re-Place						
	Wire Rope	10 Year	9 time	0.50	8	4.000	
	Operating Device	20 Year	4 time	18.30	1	18.300	
Control Device	Maintenance						
	PC, PLC Etc	5 Year	19 time	0.33	1	0.330	
	Re-Place						
	Control Device	40 Year	2 time	1.94	1	1.940	

3. Initial Cost

It shall be refer to chapters 9 about initial cost .

Unit: Million US$

Lift Type	3-Lift		
Study Case	I	II	III
Design	4.0	4.6	4.5
Fabrication	192.3	150.4	148.9
Installation	12.4	45.5	37.0
Transportation	16.3	14.6	14.6
Total	225.0	215.0	205.0

3. Life Cycle Cost

Caluculation formula

$$LCC = I_0 + \sum_{n=m}^{k} R(n)\cdot G(n) = I_0 + \sum_{n=m}^{k} C(n)\cdot R(0)\cdot G(n) = I_0 + \sum_{n=m}^{k} \frac{R(0)\cdot(1+C)^n}{(1+i)^n}$$

where,
I_0 : Initial cost
$R(0)$: Maintenance cost
C : Price rise ratio 2.0 %
i : Interest ratio 4.5 %
$R(n)=C(n)\times R(0)$: Maintenance Cost at the n-th year
$C(n)=(1+C)^n$: Price rise ratio at the n-th year
$G(n)=1/(1+i)^n$: Cost conversion coefficient at the construction

Life Cycle Cost Estimate for Rolling Gate3-Lift

Unit: Million US$

3-Lift Type Rolling Gate															
(year)	Maintenance				Replacing				Sub Total	C(n)	G(n)	Equivalent	Sub total		
	Gate Leaf	Wagon	Operating Device	Control Device	Gate Leaf	Wagon	Operating Device	Control Device					Study Case (I)	Study Case (II)	Study Case (III)
0	Initial Cost								—	1.000	1.000	—	225	215	205
5	0.080	0.400	2.400	0.330					3.210	1.104	0.802	3	228	218	208
10	0.080	0.400	2.400	0.330			4.000		7.210	1.219	0.644	6	234	224	214
15	0.080	0.400	2.400	0.330	29.142	1.600			33.952	1.346	0.517	24	258	248	238
20	0.080	0.400	2.400	0.330			18.300		21.510	1.486	0.415	14	272	262	252
25	0.080	0.400	2.400	0.330					3.210	1.641	0.333	2	274	264	254
30	0.080	0.400	2.400	0.330	29.142	9.600	4.000		45.952	1.811	0.267	23	297	287	277
35	0.080	0.400	2.400	0.330					3.210	2.000	0.214	2	299	289	279
40	0.080	0.400	2.400	0.330			18.300	1.940	23.450	2.208	0.172	9	308	298	288
45	0.080	0.400	2.400	0.330	29.142	1.600			33.952	2.438	0.138	12	320	310	300
50	0.080	0.400	2.400	0.330		8.000	4.000		15.210	2.692	0.111	5	325	315	305
55	0.080	0.400	2.400	0.330					3.210	2.972	0.089	1	326	316	306
60	0.080	0.400	2.400	0.330	29.142	9.600	18.300		60.252	3.281	0.071	15	341	331	321
65	0.080	0.400	2.400	0.330					3.210	3.623	0.057	1	342	332	322
70	0.080	0.400	2.400	0.330			4.000		7.210	4.000	0.046	2	344	334	324
75	0.080	0.400	2.400	0.330	29.142	1.600			33.952	4.416	0.037	6	350	340	330
80	0.080	0.400	2.400	0.330			18.300	1.940	23.450	4.875	0.030	4	354	344	334
85	0.080	0.400	2.400	0.330					3.210	5.383	0.024	1	355	345	335
90	0.080	0.400	2.400	0.330	29.142	9.600	4.000		45.952	5.943	0.019	6	361	351	341
95	0.080	0.400	2.400	0.330					3.210	6.562	0.015	1	362	352	342
100	0.080	0.400	2.400	0.330					3.210	7.245	0.012	1	363	353	343

Total Maintenance Cost	138	138	138

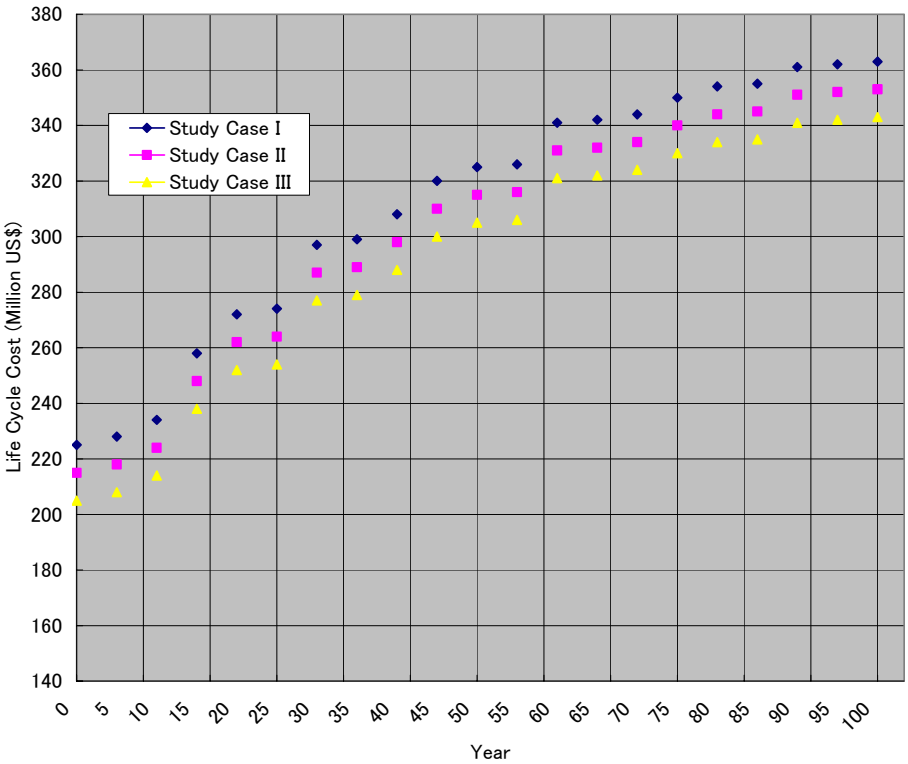

Fig.9.3-4 Life Cycle Cost Estimate of 3-lift type Rolling Gate

Fig.9.3.5, Fig. 9.3.6, and Fig. 9.3.7 show graphs obtained by comparing the life cycle costs of the miter gate and rolling gate with each other every study case and every lift type.

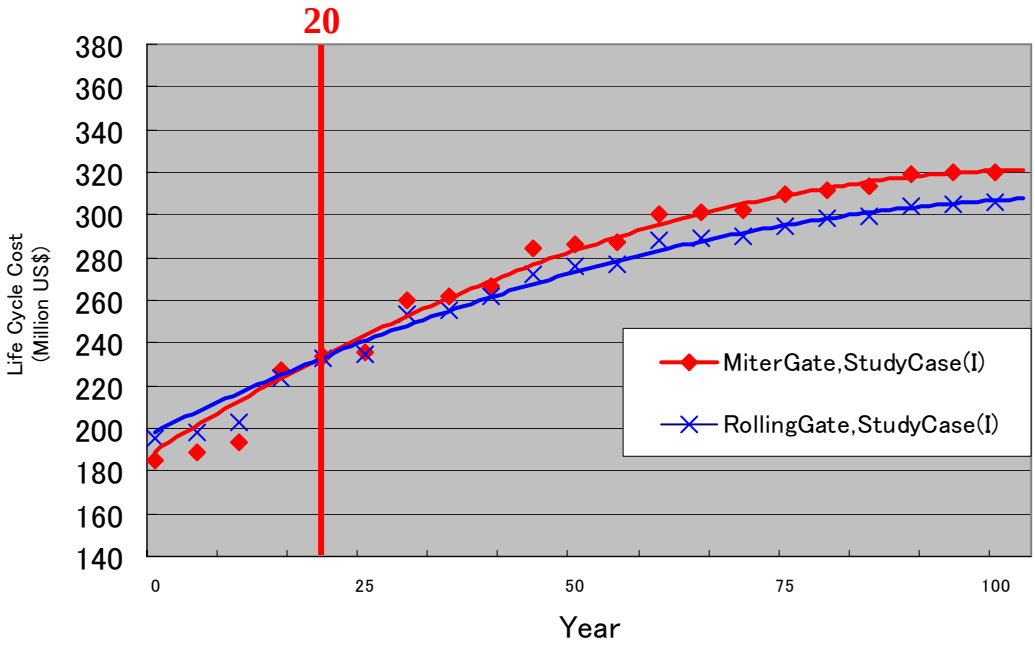

(a) L.C.C. Estimate of the New Lock Gate (Study Case(I);2-Lift)

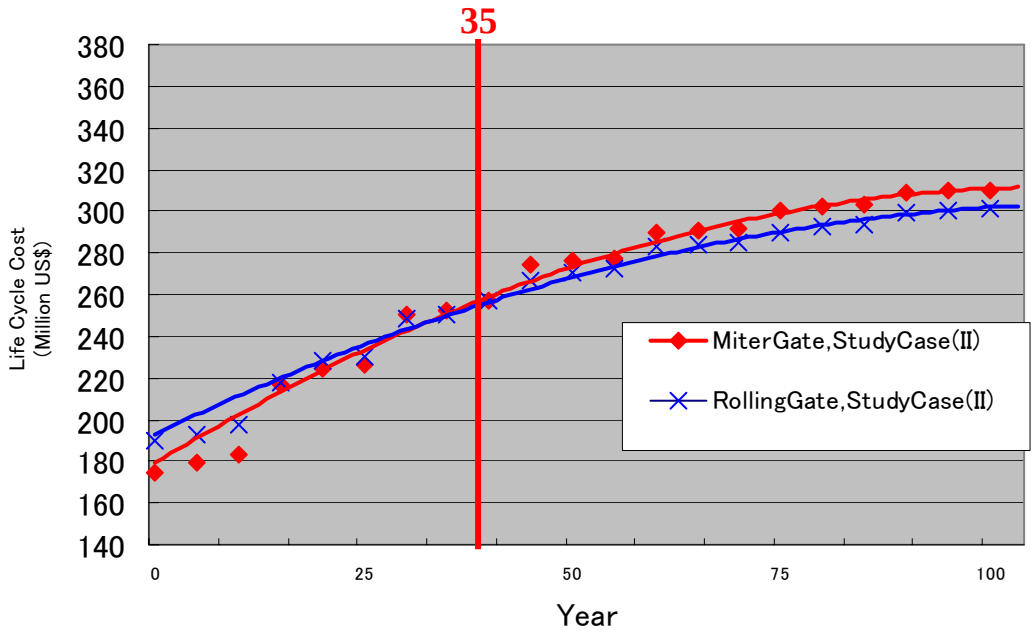

(b) L.C.C. Estimate of the New Lock Gate(Study Case(II);2-Lift)

Fig. 9.3.5 Life Cycle Cost Estimate of the New Lock Gates (2-lift)

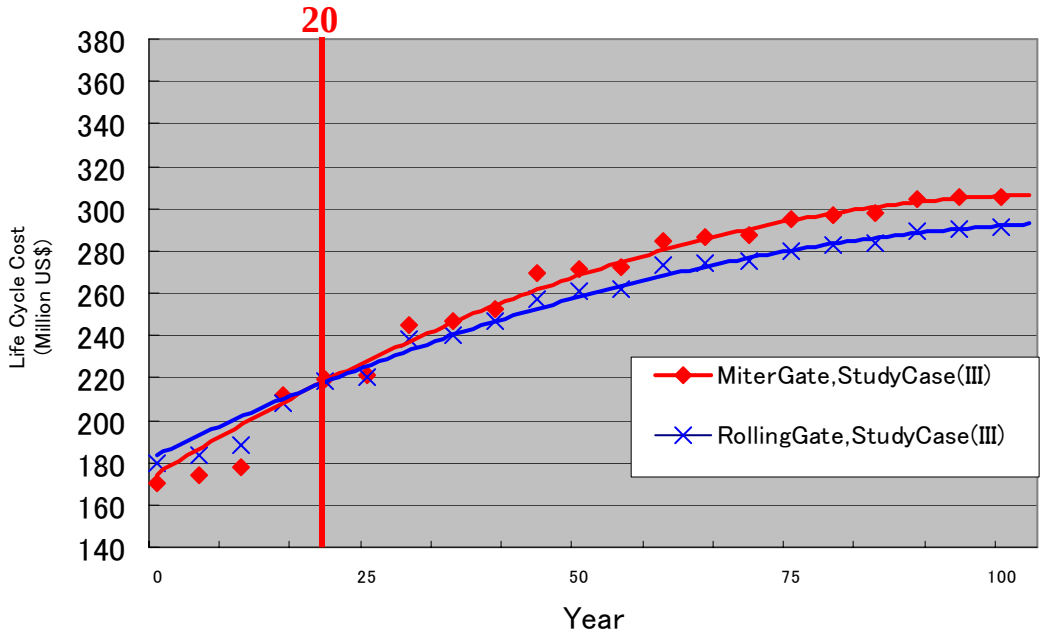

(c) L.C.C.Estimate of the New Lock Gate(Study Case(III);2-Lift)

Fig. 9.3.5 Life Cycle Cost Estimate of the New Lock Gates (2-lift)

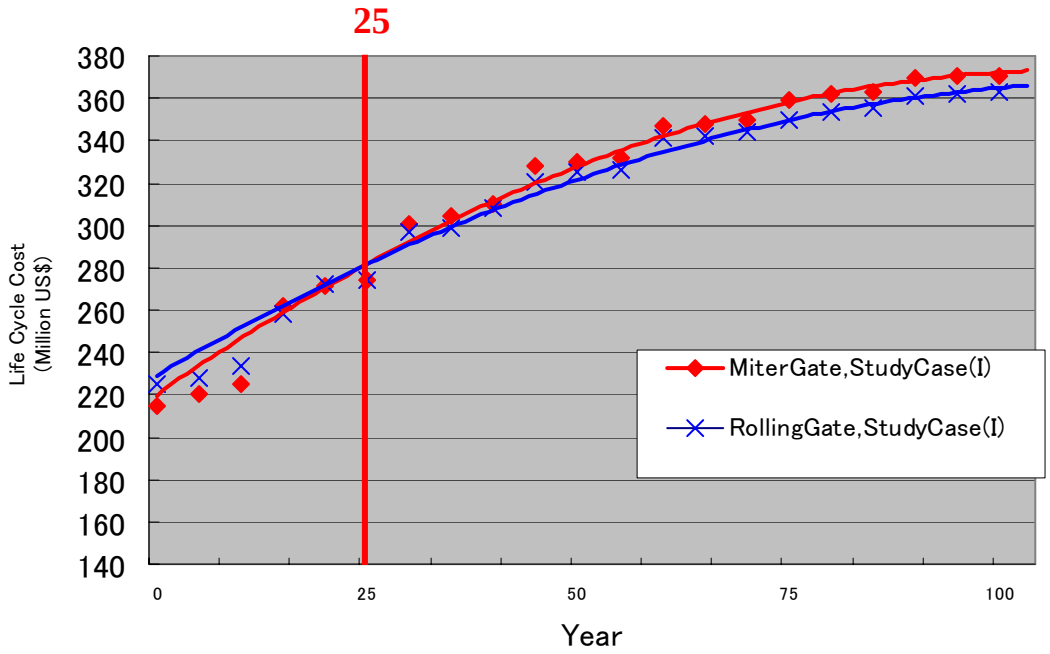

(a) L.C.C. Estimate of the New Lock Gate(Study Case(I);3-Lift)

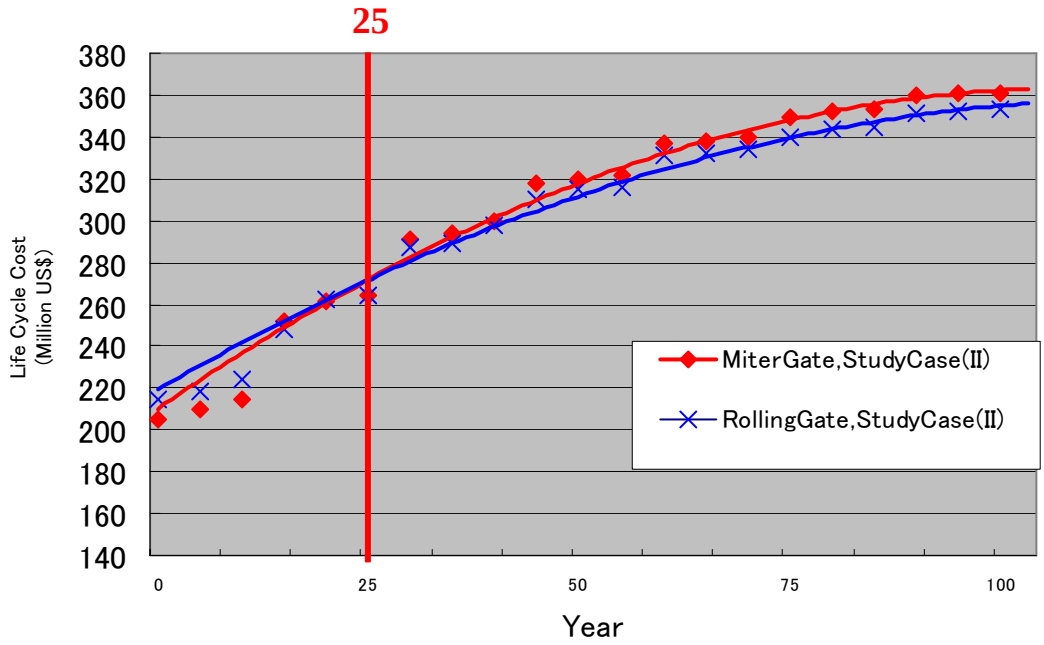

(b) L.C.C. Estimate of the New Lock Gate(Study Case(II);3-Lift)

Fig. 9.3.6 Life Cycle Cost Estimate of the New Lock Gates (3-lift)

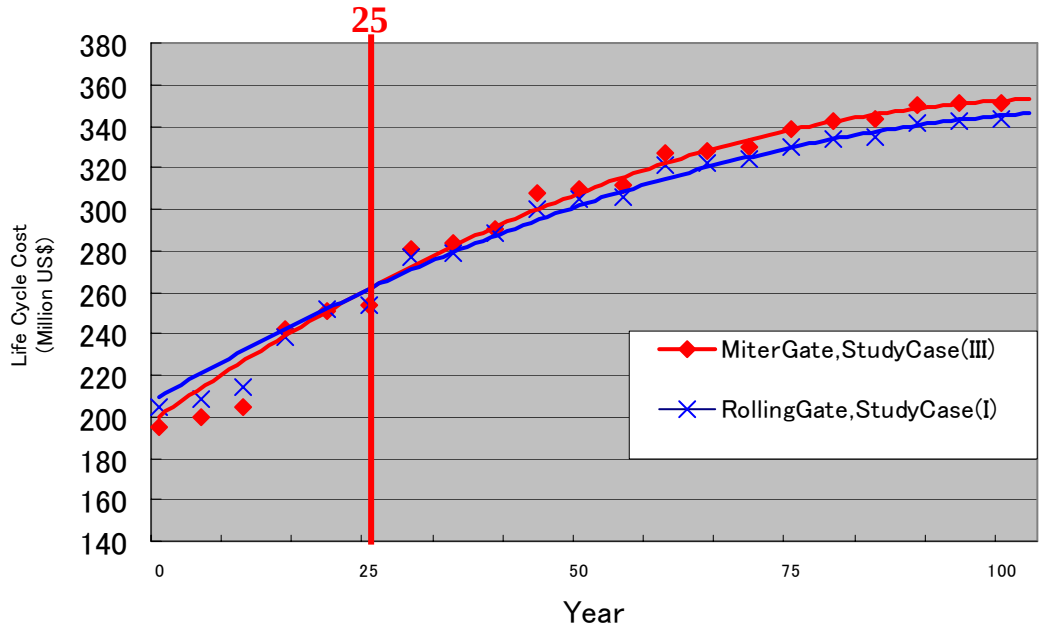

(c) L.C.C. Estimate of the New Lock Gate(Study Case(III);3-Lift)

Fig. 9.3.6 Life Cycle Cost Estimate of the New Lock Gates (3-lift)

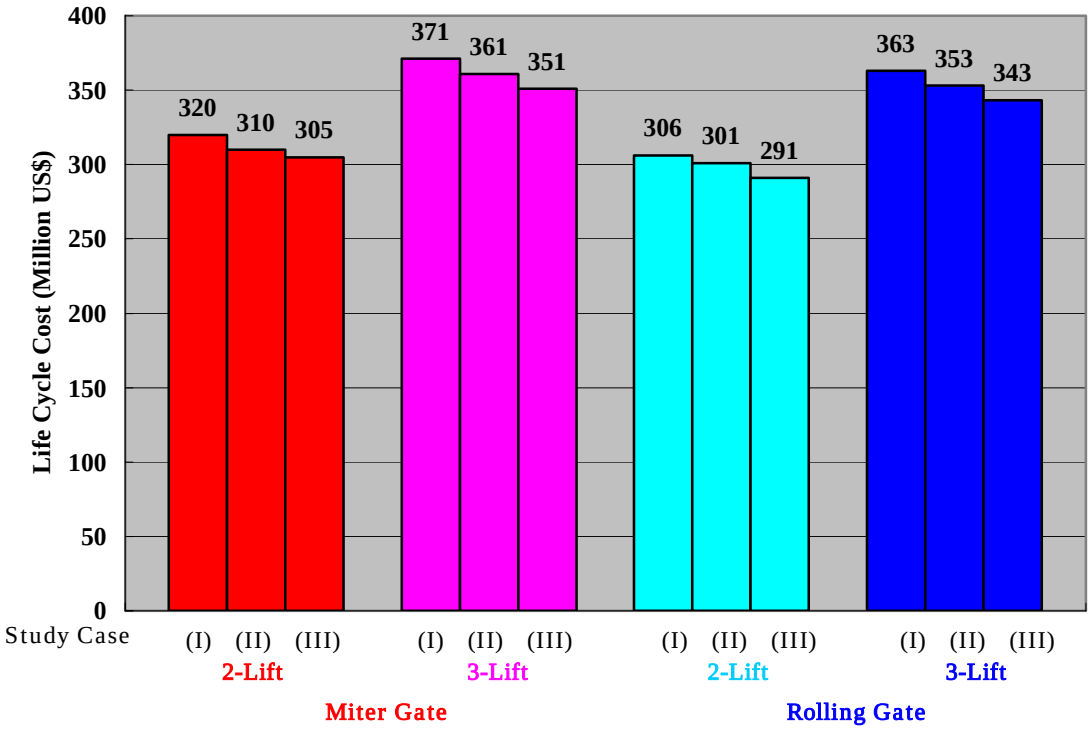

Fig. 9.3.7 Comparison Graph for Life Cycle Cost Estimate of the New Lock Gates

From these graphs, we can point out the following items.

- The maintenance cost is slightly higher in the miter gate than in the rolling gate. It is 1.35 hundred million dollar in miter gate 2-lift type, 156 million dollar in miter gate 3-lift type, 111 million dollar in rolling gate 2-lift type, and 138 million dollar in rolling gate 3-lift type, respectively. The first cause of these differences lies in the fact that re-coating and other maintenance jobs of the rolling gate can be done in the gate recess, while these jobs cannot be done in case of the miter gate unless the miter gate is removed from the chamber.
  So far as the operation device is concerned, however, the miter gate is simpler, so that its maintenance is simple and its maintenance cost is cheap as compared with the rolling gate.

- The 100 years' lift cycle costs of the miter gate and rolling gate were found to intersect each other in about 25 ~ 35 years in case of the 2-lift type and in about 25 years in case of the 3-lift type. These intersecting points show the diverging points of their advantages and disadvantages.

- The maintenance cost becomes equal in all study cases when the gate type is the same. Accordingly, a difference of the life cycle costs may be said a difference of the construction costs.

- We estimated the life cycle costs every case and compared them with each other. As a result, the lowest maintenance cost for 100 years was 2.91 hundred million dollar in the rolling gate, 2-lift type, Study Case (III), while the highest maintenance cost for 100 years was 3.71 hundred million dollar in the miter gate, 3-lift type, Study Case (I).

We evaluated the costs on the gate equipment as described above.

However, accurate evaluations of costs are difficult unless all costs of the third gate equipment such as the civil engineering construction costs, the construction costs on W.S.B, etc. are taken into account.

Attachment.
Estimates of Control System

The control system was estimated based on the data obtained from ACP. The estimate condition of the control system by the study team is shown below.

A.1 Operation method

Gates are operated by the terminals mounted in every gate in the control center. The water level, gate positions, and the conditions of filling/draining valves in the corresponding chamber (facing the sea or Lago Gatún on one side) are displayed at each terminal.

An operator remotely controls each gate in this terminal.

A.2 Backup methods

The gate control system is backed up as follows.

A.2.1 Duplication of control system

This control system is duplicated for improving its reliability as shown below. The dual systems are manually selected from each other by an operator.

A. Duplication of local area network (LAN)
The LAN is designed to be dual by physically duplicating the LAN cables connecting the control center and each local control panel to each other.

B. Duplication of server
Two server units consisting of a main server and a sub-server are mounted in the control center to duplicate the server system.

C. Duplication of PLC in local control panel
Two PLC units consisting of a main PLC and a sub-PLC are mounted in the local control panel to duplicate the PLC.

D. Duplication of drive source
Two drive sources (motors or hydraulic units) consisting of a main drive source and a sub-drive source are mounted as a dual drive source system for operating the gates.

A.2.2 Backup of terminals

An auxiliary terminal unit is mounted to be ready against troubles of the terminals in the control center.

A.2.3 Backup to be ready against LAN troubles

Gates are designed to be operated locally from the local control panel to be ready against troubles of dual LAN and server systems as a backed up remote control system.

This operation is controlled by the PLC on the local control panel.

A.2.4 Backup to be ready against PLC troubles on the local control panel

By the hardware circuit in the local control panel, the minimum requirement gate operation can be executed from the local control panel to be ready against troubles of the dual PLC in the local operation panel.

A.3 A system configuration example

Fig. A.3-1 shows an example of the miter gate 3-lift control system configuration, while Fig. A.3-2 shows an example of the rolling gate 3-lift control system configuration.

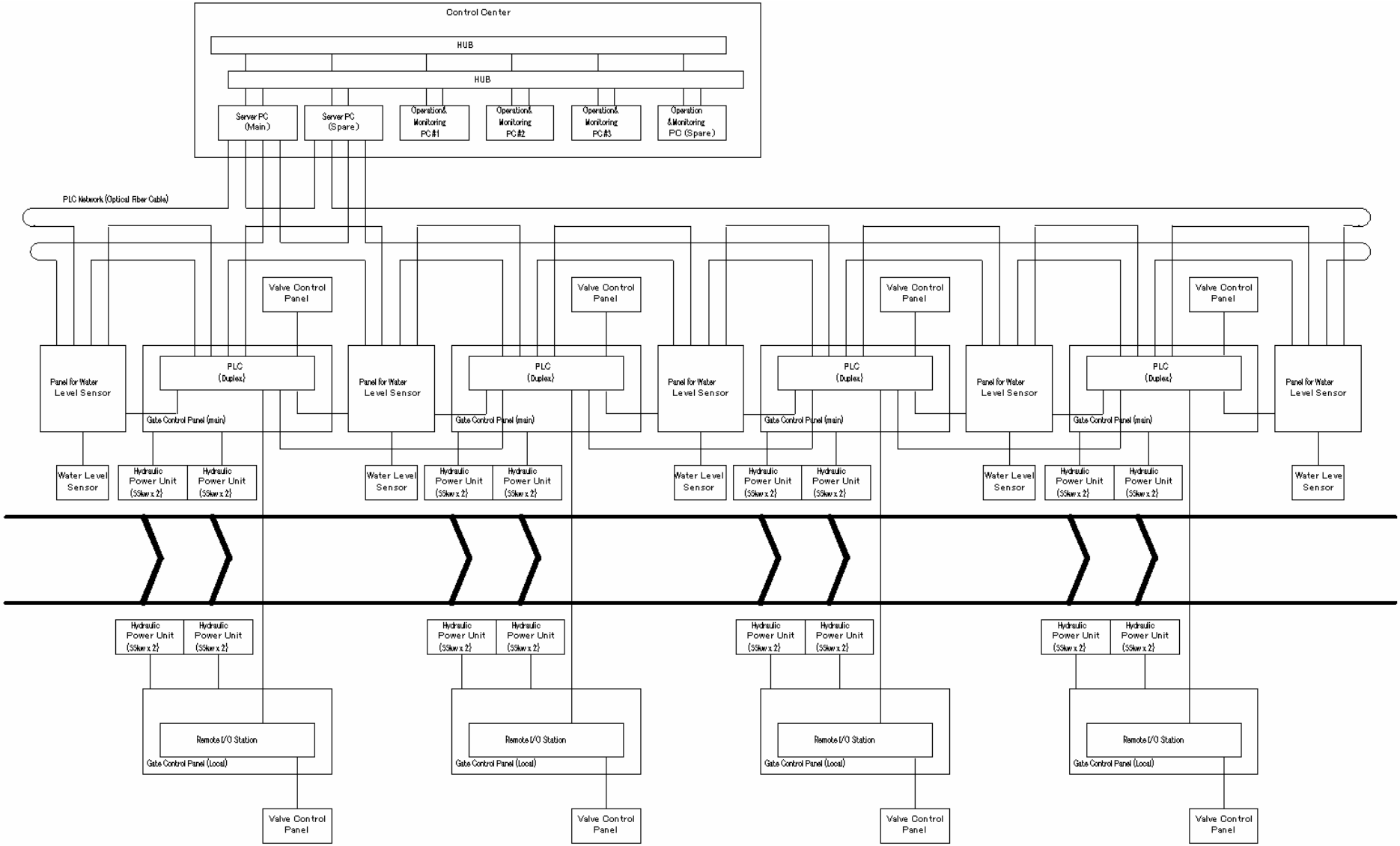

figA.3-1 Miter Gate System Configuration

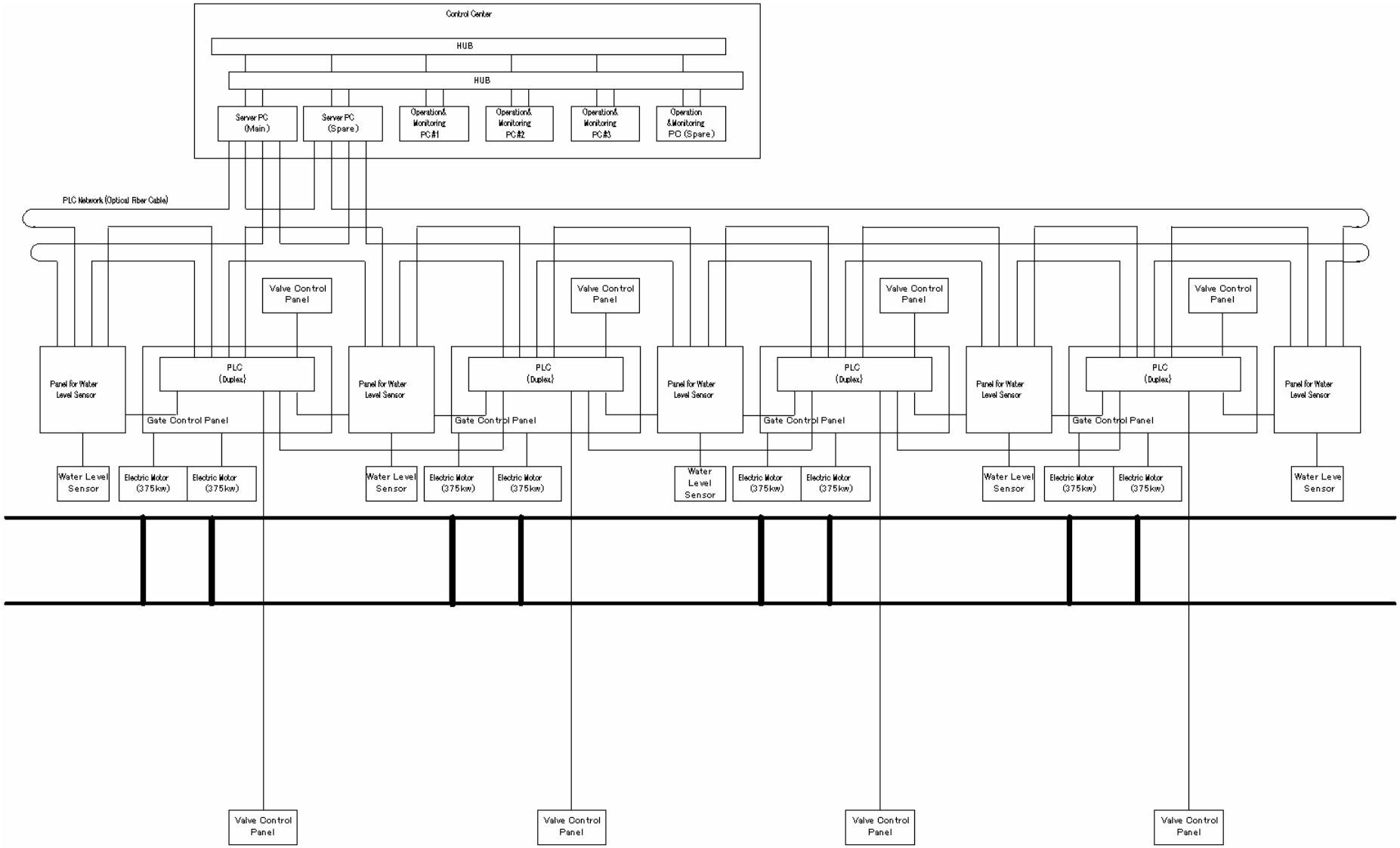

figA.3-2 Rolling Gate System Configuration

10. Comprehensive Comparison

Chapter 10. Comprehensive Comparison

We executed the technical evaluation and construction period evaluation every gate type and every study case in Chapter 8, and also evaluated the life cycle cost every gate type and study case in Chapter 9.

In this chapter, we will offer the recommendable construction method by summarizing the evaluation results in Chapters 8 and 9.

We have adopted low evaluations in case of the construction and time schedule out of the evaluation items as comprehensive evaluations.

We have compared the costs with each other assuming that the rolling gate 2-lift type Study Case (III) whose life cycle cost is the lowest out of the all 12 cases of miter gate and rolling gate is "1".

In the comparison table for miter gate, parenthesized values in ( ) in the "Comparative L.C.C" column show the values obtained by comparison assuming that the 2-lift type Study case (III) where the construction cost is the lowest in the miter gate type is "1". The life cycle cost is abbreviated as L.C.C.

10.1.1 Comprehensive Comparison for Miter Gate

Table 10.1-1 shows the comprehensive evaluation results of the miter gate.

Table 10.1-1 Evaluation of Study Cases for the Miter Gate

Study Cases				Technical Evaluation	Construction Schedule	Comprehensive Evaluation	Comparative L.C.C
2-Lift	Study Case (I)	One-unit Fabrication, Transportation, Installation	Wet	A	A	A	1.10 (1.05)
	Study Case (II)	Block Fabrication, Transportation, Dry Dock Assembly, One-unit Towing, Installation	Wet	C	A	C	1.07 (1.02)
	Study Case (III)	Block Fabrication, Transportation, Installation	Dry	A	B	B	1.05 (1.00)
3-Lift	Study Case (I)	One-unit Fabrication, Transportation, Installation	Wet	A	B	B	1.27 (1.22)
	Study Case (II)	Block Fabrication, Transportation, Dry Dock Assembly, One-unit Towing, Installation	Wet	A	B	B	1.24 (1.18)
	Study Case (III)	Block Fabrication, Transportation, Installation	Dry	A	C	C	1.21 (1.15)

Evaluation standard A: Executable B: Executable with serious conditions attached
C: Not executable

For the recommendable construction methods, 2-lift type Study case (I) is marked "A" and 2-lift type Study case (III) and 3-lift type Study case (I), (II) are marked "B".

For the L.C.C out of these recommendable construction methods, 2-lift type Study case (III) is the lowest in the miter gate, and then, 2-lift type Study case (I) is 1.1 times (or 1.05 times when comparing it with the Miter gate) and 3-lift type Study case (II) is 1.24 times (or 1.18 times when comparing it with Miter gate), and 3-lift type Study Case (I) is 1.27 times (or 1.22 times when comparing it with the Miter gate).

As comprehensive judgment, the recommendable construction methods for constructing the miter gate are 2-lift type Study case (I) as viewed from the time schedule and quality, and 2-lift type Study case (III) when the costs are regarded as a matter of the highest priority.

Our study team will recommend **2-lift type Study Case (I)** based on the following reasons.

- Evaluated as "A" rank.
- 2-Lift Type is competitive than 3-Lift type.
- Quality of 2-Lift Type Study Case (I) is higher than 2-Lift Type Study Case (III), because welding and painting can be done in the Shop.
- Construction Schedule of 2-Lift Type, Study Case (I) is shorter than 2-Lift Type, Study Case (III).
- 1.05 times than that of Miter Gate, 2-Lift, Study Case (III)).
- 1.10 times than that of Rolling Gate, 2-Lift, Study Case (III)).

10.1.2 Comprehensive comparison for rolling gate

Table 10.1-2 shows the comprehensive evaluation results of the rolling gate.

Table 10.1-2 Evaluation of Study Cases for Rolling Gate

Study Cases				Technical Evaluation	Construction Schedule	Comprehensive Evaluation	Comparative L.C.C.
2-Lift	Study Case (I)	One-unit Fabrication, Transportation, Installation	Wet	B	A	B	1.05
	Study Case (II)	Block Fabrication, Transportation, Dry Dock Assembly, One-unit Towing, Installation	Wet	C	A	C	1.03
	Study Case (III)	Block Fabrication, Transportation, Installation	Dry	A	B	B	1.00
3-Lift	Study Case (I)	One-unit Fabrication, Transportation, Installation	Wet	B	B	B	1.25
	Study Case (II)	Block Fabrication, Transportation, Dry Dock Assembly, One-unit Towing, Installation	Wet	C	B	C	1.21
	Study Case (III)	Block Fabrication, Transportation, Installation	Dry	A	C	C	1.18

Evaluation standard
A: Executable B: Executable with serious conditions attached
C: Not executable

The recommendable construction methods are 2-lift type Study case (I) (III) and 3-lift type Study Case (I), although these construction methods are evaluated as “B”.

For the L.C.C out of these recommendable construction methods, 2-lift type Study case (III) is the lowest, and then, 2-lift type Study case (I) is 1.05 times and 3-lift type Study case (I) is 1.25 times.

As comprehensive judgment, the recommendable construction methods for constructing the rolling gate are 2-lift type Study case (I) as viewed from the time schedule and quality and 2-lift type Study case (III) when the costs are regarded as a matter of the highest priority.

Our study team will recommend **2-lift type Study Case (I)** based on the following reasons.

- 2-Lift Type, Study Case (I), (III) and 3-Lift Type, Study Case (I) is evaluated as "B" rank, the highest in the 6 Cases.
- 2-Lift Type is competitive than 3-Lift type.
- Quality of 2-Lift Type Study Case (I) is higher than 2-Lift Type Study Case (III), because welding and painting can be done in the Shop.
- Construction Schedule of 2-Lift Type, Study Case (I) is shorter than 2-Lift Type, Study Case (III).
- 1.05 times than that of Rolling Gate, 2-Lift, Study Case (III)).

11. Maintenance Procedure

Chapter 11. Maintenance Procedure

Maintenance control is important for maintaining the gate equipment under a good condition and securing the maintenance and reliability of functions required for the equipment.

We will introduce the check and maintenance methods in Japan and will offer the maintenance procedure and temporary facilities about the miter gate and rolling gate. We will also offer the effective methods for reducing the life cycle cost and maintenance cost.

11.1 Miter Gate

11.1.1 Maintenance procedure

A. Outline of maintenance procedure

The following table shows major maintenance items, renewal time, and exchange places required for the miter gate.

Table 11.1.1-1 Standard Renewal Frequencies of Miter Gate Units

Item		Maintenance		Renewal		Maintenance place
		Item	Frequency	Item	Frequency	
Gate Leaf		(Seal Parts) (Air Valve etc.)	5 Years	(Seal Parts) (Bearing) (Re-coating)	15 Years	Maintenance Yard (ACP Shipyard)
Pintle		—		(Bearing)	15 Years	Site
Operating Device	Hydraulic cylinder	(Bush etc.)	5 Years	(Packing)	10 Years	Site or Factory
				All re-placing	20 Years	
	Hydraulic unit	—	—	(Pump and Motor etc.)	10 Years	Site
	Hydraulic oil	—	—	All Replacing	5 Years	Site
Control Device	Remit switch	Switch	5 Years	All Replacing	40 Years	Site
	Opening indicator	Iindicator	5 Years	All Replacing	40 Years	Site
	Local Control Panel	PC, PLC, etc.	5 Years	All Replacing	40 Years	Site

- Plan for temporary facilities

In Table 11.1.1-1 in the last paragraph, certain maintenance works is difficult at site, and it must be transferred to the maintenance yard (ACP Shipyard) .
For the maintenance of the gate leaf in the maintenance yard, we will offer the method of taking out the gate leaf from the chamber to the maintenance yard, mounting method, and necessary devices and materials.

We have studied this plan, referring to 2-lift type as an example.

Fig.11.1.1-1 shows the carry-out procedure of the gate leaf. (Drawing in progress)

We recommend the taking-out method and unloading method at maintenance yard (ACP shipyard) according to the above procedure.

The following equipment & device are used for this procedure

350-ton floating crane

Synchro lifter 35m W × 40m L, lifting head 5m, loading weight 1,800 tons or over

Installation work is executed by reversing the above procedure.

STEP 1

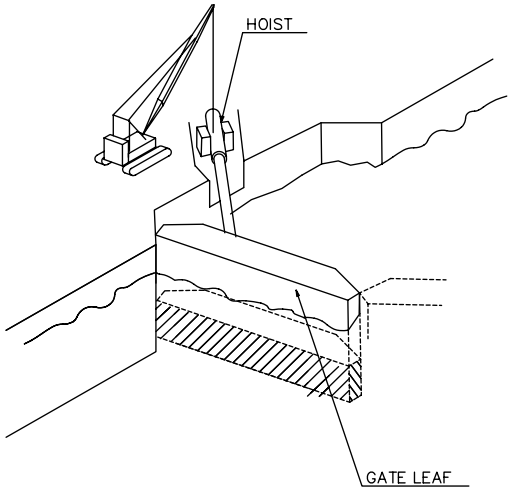

1. Removed Conecting Pin
2. Rmoved Hydraulic cylinder.

STEP 2

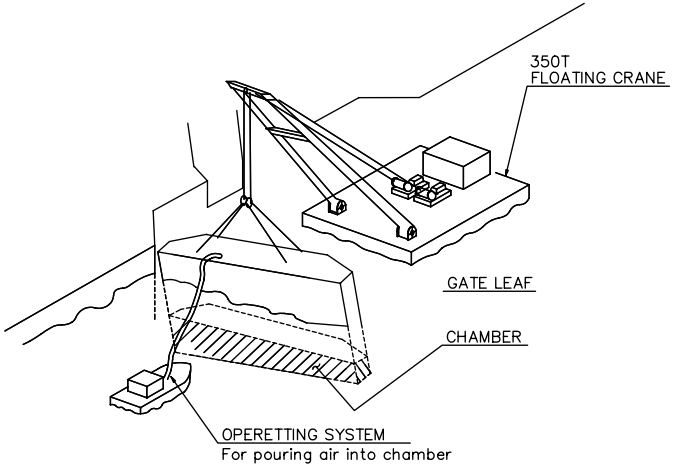

1. Air is put into air chamber and Throw down gate leaf.
2. Floating crane supports gate leaf of the right posture

STEP 3

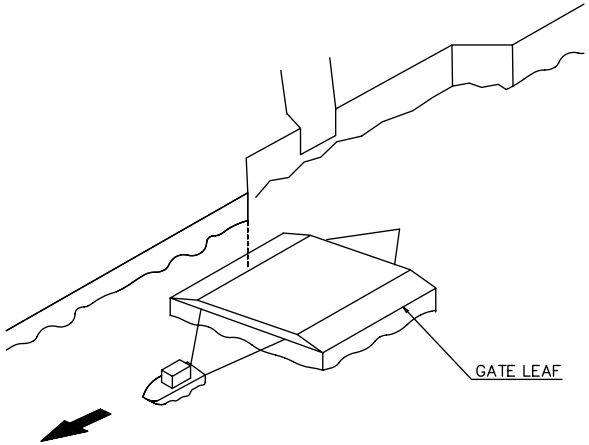

Gate leaf is carried by Tagboat to ACP'S ship yard.

STEP 4

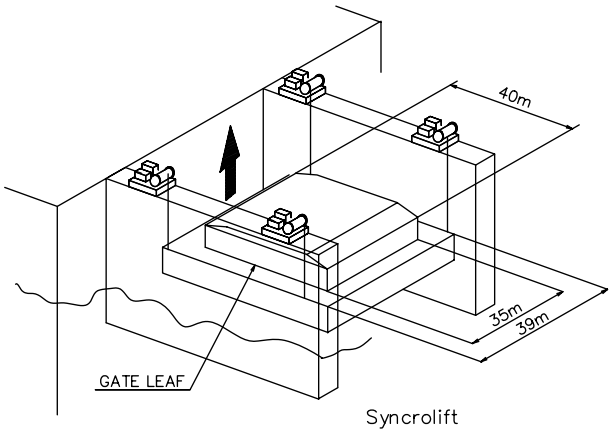

1.Gate leaf is carried by Tagboat to Syncrolift.
2.Gate leaf is made into the right posture on Syncro;ift.

STEP 5

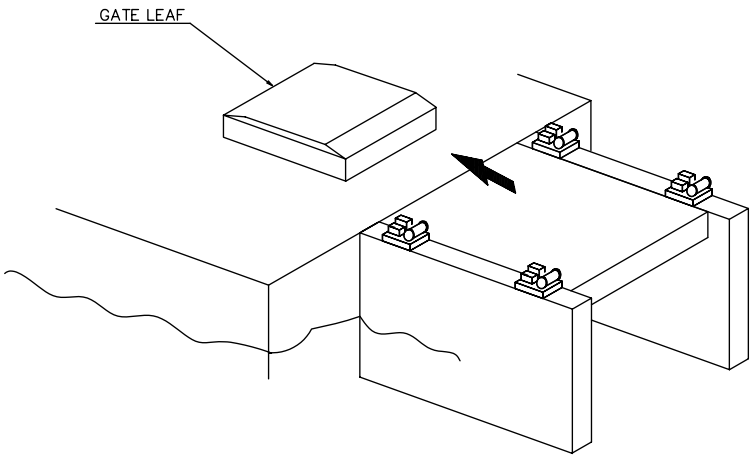

Gate leaf is carried to Maintenance yard.

Fig. 11.1.1-1

11.2 Rolling Gate

11.2.1 Maintenance procedure

A. Outline of maintenance procedure

The following table shows major maintenance items, renewal time, and exchange places required for the rolling gate.

Table 11.2.1-1 Standard Renewal Frequencies of Rolling Gate Units

Item		Maintenance		Renewal		Maintenance place
		Item	Frequency	Item	Frequency	
Gate Leaf		(Seal Parts) (Air Valve etc.)	5 years	(Seal Parts) (Bearing) (Recoating)	15 years	Gate Recess
Upper and Lower Wagon	Upper Wagon	(Roller), (Sheave), (Shaft), (Bearing), etc.	5 Years	All Replacing	50 Years	Gate Recess
	Lower Wagon	(Roller), (Sheave), (Shaft), (Bearing), etc.	5 Years	All Replacing	15 Year	Gate Recess
	Rails	—	—	All Replacing	30 Years	Site
Operating Device	Hoist	(Motor) (Brake Lining) (Bearing), etc.	5 Years	All Replacing	20 Years	Site
	Wire rope	—	—	All Replacing	10 Years	Site
Control Device	Safety Device	Device	5 Years	All Replacing	40 Years	Site
	Remit switch	Switch	5 Years	All Replacing	40 Years	Site
	Opening indicator	Indicator	5 Years	All Replacing	40 Years	Site
	Central and Local Control Panel	PC, PLC, etc.	5 Years	All Replacing	40 Years	Site

- Plan for temporary facilities

A gate recess is utilized for the maintenance shown in Table 11.2.1-1 in the last paragraph. This gate recess must be shut off by a bulkhead gate (stop log) to keep its interior dry. We will offer this shut off method.
We will also offer the gate take-out procedure when the work is done in the maintenance yard.

We have studied this plan, referring to 2-lift type as an example.

We will offer the coffering procedure of the gate recess.
Mounting a bulkhead gate is recommendable as a coffering method of the gate recess. The height of gate leaf used for one lock gate comprises 3 kinds in case of 2-lift type and 4 kinds in case of 3-lift type. We will offer the gate leaf structure being divided into four blocks as a result of taking the following two requirements into account.

A. One set is applicable to all gates
B. Space-saving of the storage place

Fig.11.2.1-1 shows the hoisting procedure of the gate leaf of the bulkhead gate.

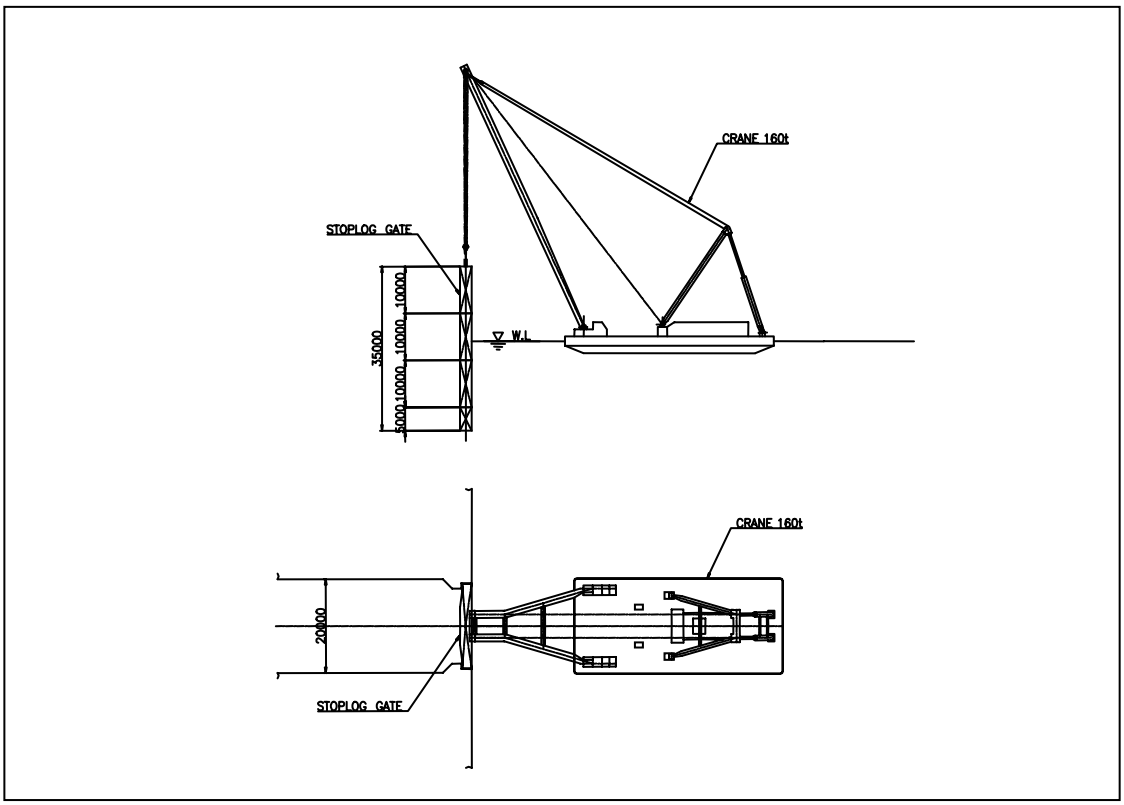

Fig.11.2.1-1 Hoisting Procedure of the Bulkhead Gate (Stop Log)

This work can be done by using a 160-ton floating crane.

We recommend the taking-out method by the above procedure.
Maintenance is difficult after unloading when taking the size and weight of the gate leak into account. Accordingly, we recommend the use of a dry dock as a maintenance yard for the gate leaf.

The following equipment & device are used for this procedure.

350-ton floating crane
Dry dock 35m W x 40m L, Depth 10m or over

Installation work is executed by reversing the above procedure.

Fig.11.2.1-2 shows the carry-out procedure of the gate leaf.

STEP 1

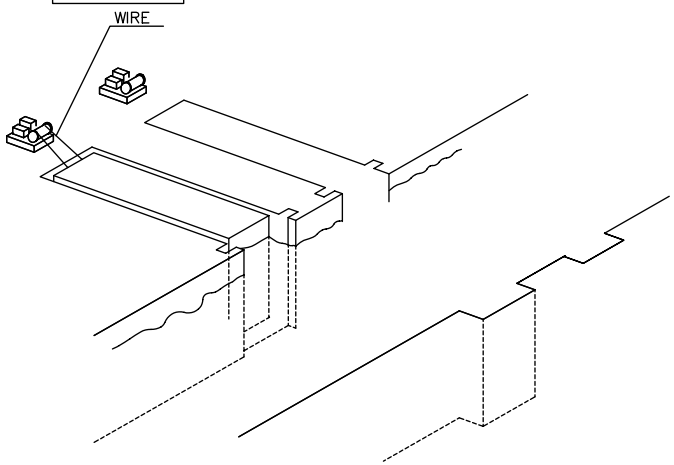

1. It is removed wire from Gate leaf.
1. It is removed upper and bottom wagon from gate leaf.

STEP 2

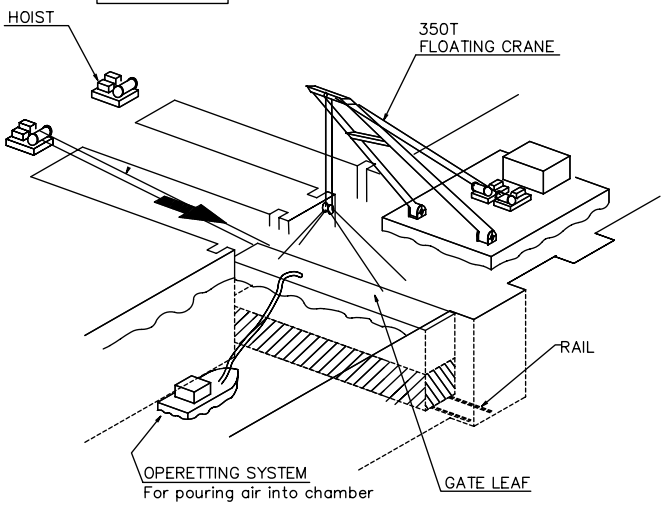

1. Gate leaf is removed from recess by floating crane.

STEP 3

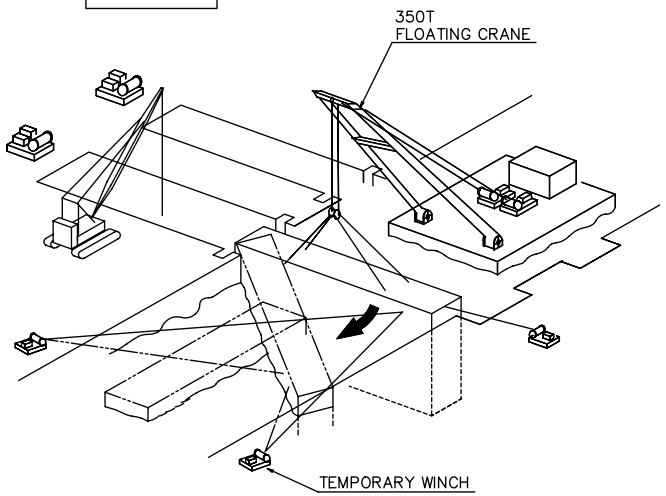

1. The direction of Gate leaf is changed by temporary winch.

STEP 4

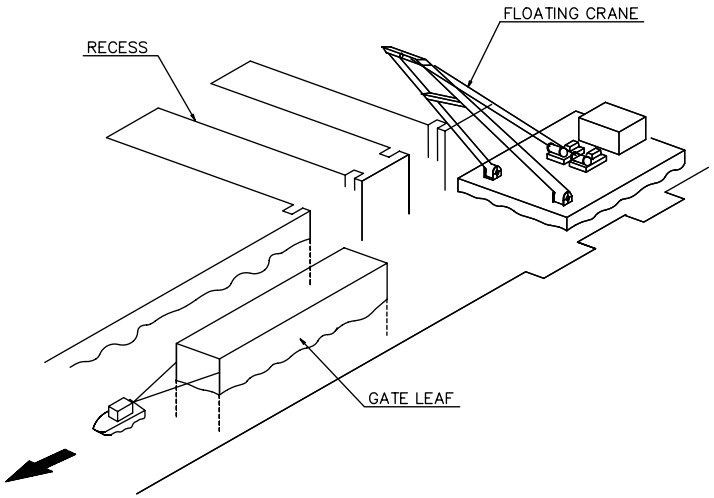

Gate leaf is carried by tagboat to Maintenance yard(Dry Dock).

STEP 5

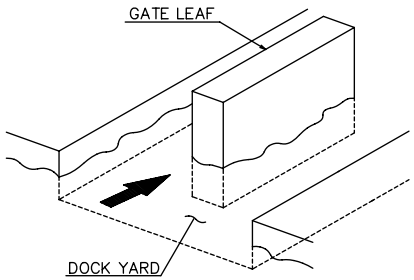

Water is poured to the dock yard.

STEP 6

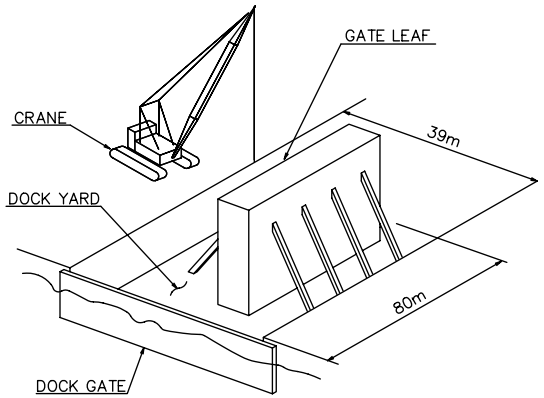

1. The gate leaf is renewal in the dock yard.
2. The area of 39mx80m is required for an assembly in gate, and the space of a crane is also required. (One gate)

Fig. 11.2.1-2 Carry-out Procedure of the Gate Leaf

MAINTENANCE PROCEDURE FOR ROLLING GATE

12. Social and Environmental Consideration

Chapter 12 Social and Environmental Consideration

12.1. Introduction

When the Panama Canal Expansion Project (the Post-Panamax Lock Project) shifts to the execution stage, it is predicted that there could be a great impact on the natural and the social environments because of its scale of the project. The whole project consists of many sub-components. The sub-components, which may have larger impacts on the social and environmental aspects, might be to secure water resources for the Canal operation, to construct the new locks, to handle the excavated rocks and sands from the new navigational channels and the impacts which may be resulting from the execution of the civil construction works.

Since the feasibility studies on the concept design of the new locks has not yet been finalized as of December 2003, studies now being conducted by ACP on the environmental and social impacts from the whole project remain as preliminary and partial stage as collecting 'Baseline Information'. Therefore, a comprehensive study does not exist which focuses on the social and environmental impacts from the construction and installation of the new lock gates which is one of the sub-components of the whole new lock project. So that, the following descriptions are limited to the peripheral and associated information available as of December 2003.

12.2. Circumstances of the Project and Expected Range of Impact on Social Aspects

12.2.1. Canal Watershed Projects

The Panama Canal Watershed, which is deeply related to securing the water resources for the Canal operation, has become totaled to about 550,000 ha. in 1999 adding the Western Watershed (about 210,000 ha.) to the conventional Eastern Watershed (340,000 ha). The total area of this watershed of the Canal reaches about 7 percent of the total land area of the Republic, which includes 3 prefectures (Panama, Colon and Coclé). In the Canal Expansion Project, it includes the projects which constructs dams in the several rivers (Indio, Toabre and Coclé) in the Western Watershed area and secures the water resources by conveying water through the conduit to the Lake Gatun.

It is predicted that there would not only be the influences to the natural

environment but be the involuntary resettlers (about 1,500) which requires social considerations. The drinking and industrial waters are supplied from the dams in the Canal watershed area to the Panama and Colon City, and the maintenance and management of the water quality shall be the issue to confront. As the required water volume for the new Canal operation has not been confirmed, the scale of each dam to be built is not decided.

12.2.2. Construction of the New Locks and New Navigation Channel Project

The construction site of the third set of locks in the Pacific side shall be accessed from the track of the third locks which the Isthmian Canal Commission has ever excavated till 1942 and it shall proceed in parallel to the Miraflores Locks and the Pedro Miguel Locks and shall approach again to the existing Canal at the entrance of the Culebra Cut. Since the construction site is within a control area of the Canal, there should not be a significant impact on the social and environmental aspects. It would rather be a problem how to handle and settle the excavated materials which will be totaled to about 70,000,000 $m^{3.}$ In the Pacific Ocean side, a project is being planned to construct an artificial island in the offshore using the excavated materials. It is said that ACP has been conducting studies on the impacts caused by the change of the ocean current and influence on the contamination of the seawater resulting from the projects. As to the Atlantic side, it is probable that a track of the third locks, which was suspended in 1942, shall be utilized as the construction of the new locks, and studies shall be required to assess the environmental impact caused by the disposal of the excavated materials which shall not be so large volumes as in the Pacific side.

12.3. Environmental Law

12.3.1. General Environmental Law

The basis of the environmental policy in Panama has established by the Law No. 41 (enforced on July 1, 1998), the General Environmental Law. With 12 Chapters and 133 articles, it stipulates the essential policies for the environmental protection, the maintenance and the recovery of the environment, the promotion of the maintenance of the natural environment and the promotion of the social

and the economical management of the environment. Also, it is stipulated that the Environmental National Authority (ANAM) should be created in that law.

In the Executive Order No. 59 (enforced on March 16, 2000), the actual procedures for the environmental impact assessment was provided. In this order, it is stated that all the projects must require a EIA and no project can be executed without the submission of the EIA report to ANAM for their evaluation and authorization. Depending on the level of environmental impact, all the projects should be defined in three types of categories. Category I includes such projects as slighter level of risk or impact on the environment and which can be controlled within the range of the current environmental standards. Category II includes projects which have a certain level of risk or impact on the environment but countermeasures can be taken with a conventional way of methods. Category III includes projects which have a significant level of risk or impact on the environment in its qualities and quantities and which may require further detailed EIA for the environmental management proposals. The environmental management proposal should include plans for mitigations, progress, alternatives and countermeasures for unexpected accidents.

12.3.2. Governmental Authorities Concerned to the Environmental Issues

Depending on the types of business of the project, an EIA must be submitted to the relevant governmental authorities other than ANAM for the evaluation, such like the Ministry of Commerce and Industry (MICI), the Ministry of Economy and Finance (MEF), the Ministry of Agricultural Development (MIDA), the Ministry of Health (MINSA), the Ministry of Public Works (MOP), the Ministry of Housing (MIVI), the National Water and Sewer Authority (IDAAN), the Panamanian Tourism Institute (IPAT), the Institute for Social Investment (FIS), the Panama Maritime Authority (AMP) and the Public Service Regulatory Entity (ERSP).

There are 2 bureaus in charge of the evaluation of the EIA in ANAM who are the DINEORA (Dieccion Nacional de Evaluacion Ordenamiento Ambiental; National Direction of Environmental Evaluation Order) and the DINAPROCA (Direccion Nacional de Proteccion Calidad Ambiental; National Direction of Environmental Quality Protection). The number of technical staffs who should evaluate the EIA

in each bureau is not enough. Because of the recent start up and the lack of accumulation of the knowledges and the experiences on the evaluation work, it is observed that there should be some limitation to conduct such evaluation works that requires higher level of environment relevant knowledges.

12.4. Environmental Researches and Countermeasures Conducted by ACP

12.4.1. Fundamental Environmental Policy of ACP

The basis of the ACP's policy is that they should respect the requirements of the domestic laws and regulations of Panama as previously described. On the other hand, ACP enjoys many privileges because of the regulations stipulated in the Constitution of the Republic of Panama (Chapter 14th 'Panama Canal') and the Organizational Laws of the Panama Canal Authority. As to the water and the natural resources in the Canal watershed area, which is strongly related to this project in connection with the environmental aspects, it is stated in the same law that the ACP should be responsible for its control and management, conservation, utilization and maintenance (Article 6).

Also, there is a strong impression that ACP has their exclusive right to control and manage the navigation channels and the Canal areas in a different dimension. In such aspects, we could judge that it should be a right choice that ACP tries to make an alliance with the other governmental authorities including ANAM for the evaluation of the environmental impact of the project as ACP executes to start the project.

ACP well acknowledges the standard required by the international finance institutes for the measures to be taken for the social and environmental impact. While it has not yet been decided if ACP shall ask for financial arrangement to the international financial institutes, ACP has well understood the ground of the JBIC's social and environmental considerations which are in accordance with the standards of the international financial institutes. After examining the results of whole feasibility studies now being conducted, the project management consultant shall decide the procurement formula of the financial resources.

12.4.2. Current Status of Environmental Impact Assessment

The environmental provisions, which are confirmed through the interviews to

the environmental sections of ACP and to other sources, are summarized as follows.

General Provisions for the Environment

1. Collaborative Works among the Governmental Institutions Concerned
2. Study on the Participation of the Public to the Environmental Issue
3. Development of the Environmental Management

Western Areas as the New Water Resources

1. EIA for the River Indio, the River Cano Sucio and the River Toabre
2. Study on the Current Conditions
3. Estimation of the Impact and its Evaluations
4. Study on the Mitigation Measures
5. Environmental Management Plan
6. Analysis on the Alternatives
7. Public Participation Plan

The Comparative Study for the With-dam and Without-dam Constructions

1. Fact-findings for the Villages with Impacts from the Construction of the Dams (Cultural Characteristics and their Attitudes for the Environmental Issues)
2. Disclosure of the Information on the Land Utilization Plans to the Public
3. Studies on the Community Development Plan

It is said that there will be 1,500 to 1,800 resettlers when the dam is constructed in the River Indio.

Eastern Area as the Resource of the Drinking Water

1. Researches on the Current Status of the Lake Alajuela, the River Chille Grande and the River Lagarto
2. Socio-economic and Cultural Data Analysis for the Canal Area
3. Simulations on the Alternative Plans

The Project Areas for the Third Locks and the Excavation Areas for the Access Channels

1. Physical, Biographical, Socio-economic and Cultural Elemental Study for the Current Status
2. Study on the Estimated Impact and its Evaluation
3. Study on the Mitigation Measures
4. Plan of the Environmental Management

5. Analysis of the Alternatives
6. Promotion of the Public Participation

In order to conclude this chapter, we may repeat that all the studies and/or researches described above are in the stage of collecting baseline information as the final range of the whole project has not yet been established.

The response from the person in charge of the ACP for the check lists (JBIC format) are as per attached (Annex A-1 to C-3).

13. Indicative Terms and Conditions for the JBIC Buyer Credit Facility

Chapter 13. Indicative Terms and Conditions for the JBIC Buyer Credit Facility

The terms and conditions set forth in this Term Sheet is the general indicative terms and conditions based on the current OECD Guidelines, with which every Export Credit Agency shall comply, subject to JBIC's approval.

1. Lenders:

JBIC together with one (1) or more private financial institutions in Japan (the "Co-financiers"). In principle, JBIC will provide sixty percent (60%) of the total loan amount of the Loan and the Co-financiers will provide the remaining forty percent (40%);

2. Borrower:

Autoridad del Canal de Panama (ACP)

3. Loan Amount and Use of Loan:

The amount of our financing will be limited to the sum of (1) and (2) below and will be expressed and fixed in Japanese yen or in U.S. Dollars;

(1) For Japanese goods and services:

Up to eighty-five per cent (85%) of the price of Japanese goods and services supplied from Japan including goods and services originally from third countries (the "Japanese cost") in accordance with an eligible contract signed by ACP (the "Importer") and Japanese suppliers (the "Supply Contract");

(2) For local goods and services:

Up to the price of goods and services supplied in the Importer's country in accordance with the Supply Contract (the "Local Cost"); provided, however, that the amount to be financed under the Loan will not exceed fifteen percent (15%) of the Japanese Cost;

4. Currency:

The loan will be expressed and payable in Japanese yen or U.S. Dollars;

5. Interest Rate:

Commercial Interest Reference Rate (CIRR) applicable on the date of the conclusion of the Supply Contract;

6. Risk Premium

The Risk Premium (*) will be charged by way of margin to be added to the interest rate referred to in paragraph 5 above;

(*) The Risk Premium is determined in accordance with the OECD Guidelines. This rate is calculated on terms and conditions of the Loan. This rate may be revised from time to time.

7. Amortization:

The principal of the loan will be repaid in not more than twenty (20) semi-annual equal installments, starting from six (6) months after the scheduled date of the commissioning of the Project, which will be ascertained by JBIC by reference to the Supply Contract;

8. Commitment Charge:

The commitment charge will be one-fifth of one per cent (0.2%) per annum on the principal amount of the loan undisbursed from time to time and payable semi-annually;

9. Cash Payment:

The Importer will make cash payments of not less than fifteen per cent (15%) of the Japanese Cost from resources other than the Loan;

Appendix

Annex A-1

Screening Form

Name of Project：New Post-Panamax Locks Project

Name of Project Execution Organization：Autoridad del Canal de Panamá（ACP）

Name of Borrower：(Owner) Autoridad del Canal de Panamá（ACP）

Please provide the name, department, job title, and contact details for the person who is responsible for filling out this form.

Name：Mr. César Kiamco

Department and title：Department of Engineering and Project. División de Proyectos (IPC), Manager

Name of Company or Organization：Autoridad del Canal de Panamá（ACP）

Telephone number：276-2828

Fax number：276-2846

E-Mail address：ckiamuco@panal.com

Date：November 14, 2003

Signature：

Annex A-2 (ACP's information are in ***Italic and bold***)

Questions

Q1. Please provide the address of the project site.

Address of the project site: Panama Canal Atlantic and Pacific Entrance

Q2. Please provide brief explanation of the project.
Construction of one set of locks at the Atlantic and at the Pacific entrance of the Panama Canal for Post-Panamax Ships.

Q3. Will JBIC loan be applied to a new project or an executing project? In case of executing project, please inform the presence of strong claims by local residents.

■ New Project ☐ Executing Project (with Claim)
☐ Executing Project (without Claim) ☐ Others (Please specify)

Q4. In case of this project, is it necessary to execute Environmental Impact Assessment (EIA) based on the laws or regulations? If necessary, please inform the progress of EIA.

☐ Required (Completed) ■ Required (Under execution or under planning)
☐ Not Required ☐ Others (Please specify)

Q5. In case that EIA is already completed, pleases inform whether EIA report is already approved based on the environmental assessment system or not. If EIA report is already approved, please provide the date and name of authorities of the approval.

☐ Approved (without condition) ☐ Approved (conditional)
☐ Under approval process ☐ Others (Please specify)

Date of Approval: _____
Name of Authorities: _____

Q6. If environmental permit(s) other than EIA is required, please provide the name of required permit(s). Have you obtained required permit(s)?

☐ Obtained ☐ Required, but not obtained yet
■ Not required ☐ Others (Please specify)

Name(s) of required permit(s): _____

Q7. Will the loan be used for the undertaking that cannot specify the project at this stage (e.g. export or lease of machinery that has no relation with specific project, or Two Step Loan that cannot specify the project at the time of loan agreement)?

(Yes / No)

If you answered "Yes", it is not necessary to reply to the following questions.
If you answered "No", please reply to the following questions.

Q8. Are there any environmentally sensitive area shown below in and around project site?

(Yes / No)

If you answered "Yes", please select applicable items by marking, and reply to following questions.
If you answered "No", please reply to questions 9 and after.

- ☐ (1) National parks, protected areas designated by government (coastal areas, wetlands, habitats of minorities or indigenous populations, heritage sites, etc.)
- ☐ (2) Primeval forests, tropical natural forests
- ☐ (3) Ecologically important habitats (coral reefs, mangrove, tidal flats, etc.)
- ☐ (4) Habitats of endangered species of which protection is required under local laws and international agreements.
- ☐ (5) Areas that have risks of large scale increase in soil salinity or soil erosion
- ☐ (6) Desertification areas
- ☐ (7) Areas with special values from archaeological, historical and/or cultural viewpoints
- ☐ (8) Habitats of minorities, indigenous populations, nomadic people with traditional life style, or areas with special social value

Q9. Does the project involve following elements?

(Yes / No)

If you answered "Yes", please describe the scale of applicable elements, and reply to the questions 10 and after.
If you answered "No", please reply to questions 11 and after.

- ☐ (1) Involuntary resettlement (Number of resettlers: 1,500)
- ☐ (2) Pumping of groundwater (Scale: ton/year)
- ☐ (3) Land reclamation and/or development (Scale: 70 Mil. m^3 in Atlantic and 20 Mil. m^3 in Pacific)
- ☐ (4) Deforestation (Scale: ha)

Q10. Please reply to this question only in case that the project involves some of the above (1) to (4) elements. In the country where the project is planned, are there any regulations on a scale of the elements asked in question 9? If the country has such regulation, please answer whether the project satisfies the regulation or not.

☐ Regulation is applicable (☐ satisfied ☐ not satisfied) ■ No regulation
☐ Others (Please specify)

Please reply to questions 11 and after.

Q11. Will JBIC share in the project be equal or less than 5% of the total project cost, or the total amount of JBIC loan equal or less than SDR 10 million?

(Yes / No)

If you answered "Yes", it is not necessary to reply to the following questions.
If you answered "No", please reply to questions 12 and after.

Q12. Does the project belong to either of the sectors that impact on the environment is deemed immaterial or is not anticipated under normal conditions (e.g. maintenance of the existing facilities, non-expansionary renovation project, acquisition of rights or interest without additional plant investment)?

(Yes / No)

If you answered "Yes", it is not necessary to reply to following questions.
If you answered "No", please reply to the questions 13 and after.

Q13. Does the project belong to the following sectors?

(Yes / No)

If you answered "Yes", please specify the sector by marking, and reply to questions 14 and after.
If you answered "No", it is not necessary to reply to the following questions.

- ☐ (1) Hydro power plant, Dam or water reservoir
- ☐ (2) Thermal power plant
- ☐ (3) Mines
- ☐ (4) Development of oil and gas
- ☐ (5) Pipeline
- ☐ (6) Steel industry (with large scale furnace)
- ☐ (7) No-ferrous metal refining
- ☐ (8) Petrochemical (including manufacturing of raw materials and petrochemical complex)
- ☐ (9) Terminal of oil, gas and chemicals
- ☐ (10) Petroleum refining
- ☐ (11) Paper and pulp
- ☐ (12) Manufacturing and/or transportation of hazardous substances (specified by international agreement)
- ☐ (13) Road, railway or bride
- ☐ (14) Airport
- ☐ (15) Port
- ☐ (16) Waste material processing or treatment
- ☐ (17) Treatment of sewage and/or waste water that includes hazardous substances or executed at environmentally sensitive area
- ☐ (18) Power transmission and/or distribution lines (including large scale involuntary resettlement, large scale deforestation or submarine cable)
- ☐ (19) Tourism (Construction of hotel, etc.)
- ☐ (20) Forestry or tree planting
- ☐ (21) Agriculture (large scale project and/or project including irrigation)

Annex A-5

Q14. Please provide information on the scale of the project (project area, area of plants and buildings, production capacity, amounts of power generation, etc.) Further, pleased explain whether an execution of EIA is required on account of the large scale of the project in the country where the project is implemented.

This project includes the following items:

- ***One Lock at the Atlantic and one at the Pacific***
- ***Freshwater impounding and hydroelectric dam(s)***
- ***Navigational channels improvements***
- ***Aids to navigation and ship-holding accessories or tie-up structures***
- ***EIA are required. These studies are being performed and will be ready by June 2004.***

Annex B-1

Category	Environmental Item	Main Check Items	Confirmation of Environmental Considerations
1 Permits and Explanation	(1) EIA and Environmental Permits	① Have EIA reports been officially completed? ② Have EIA reports been approved by authorities of the host country's government? ③ Have EIA reports been unconditionally approved? If conditions are imposed on the approval of EIA reports, are the conditions satisfied? ④ In addition to the above approvals, have other required environmental permits been obtained from the appropriate regulatory authorities of the host country's government?	ACP is carrying now an EIA. The report will be finished by June, 2004.
	(2) Explanation to the Public	① Are contents of the project and the potential impacts adequately explained to the public based on appropriate procedures, including information disclosure? Is understanding obtained from the public? ② Are proper responses made to comments from the public and regulatory authorities?	ACP is completing a Master Plan Project that will be presented to the public soon.
2 Mitigation Measures	(1) Water Quality	① Is there a possibility that changes in river flow downstream (mainly water level drawdown) due to the project will cause areas that do not comply with the country's ambient water quality standards?	Water quality will remain [minimum] the same.
	(2) Wastes	① In the case of that large volumes of excavated/dredged materials are generated, are the excavated/dredged materials properly treated and disposed of in accordance with the country's standards?	ACP is studying the possibility of building a peninsula or an artificial island with the resulting materials from excavation for the new locks and navigation channels.
	(3) Subsidence	① Is there a possibility that the excavation of waterways will cause groundwater level drawdown or subsidence? Are adequate measures taken, if necessary?	Not affected.
3 Natural Environment	(1) Protected Areas	① Is the project site located in protected areas designated by the country's laws or international treaties and conventions? Is there a possibility that the project will affect the protected areas?	The project I located within areas protected by ACP.
	(2) Ecosystem	① Does the project site encompass primeval forests, tropical rain forests, ecologically valuable habitats (e.g., coral reefs, mangroves, or tidal flats)? ② Does the project site encompass the protected habitats of endangered species designated by the country's laws or international treaties and conventions? ③ If significant ecological impacts are anticipated, are adequate protection measures taken to reduce the impacts on the ecosystem? ④ Is there a possibility that hydrologic changes, such as reduction of the river flow, and seawater intrusion up the river will adversely affect downstream aquatic organisms, animals, vegetation, and ecosystems? ⑤ Is there a possibility that the changes in water flows due to the project will adversely affect aquatic environments in the river? Are adequate measures taken to reduce the impacts on aquatic environments, such as aquatic organisms?	ACP will take necessary counter measures in order to minimize the impacts according to recommendation from the EIA report.

Annex B-2

Category	Environmental Item	Main Check Items	Confirmation of Environmental Considerations
3 Natural Environment	(3) Hydrology	① Is there a possibility that hydrologic changes due to the project will adversely affect surface water and groundwater flows?	Not affected.
	(4) Topography and Geology	① Is there a possibility that excavation of rivers and channels will cause a large-scale alteration of the topographic features and geologic structures in the surrounding areas?	Not affected.
4 Social Environment	(1) Resettlement	① Is involuntary resettlement caused by project implementation? If involuntary resettlement is caused, are efforts made to minimize the impacts caused by the resettlement? ② Is adequate explanation on relocation and compensation given to affected persons prior to resettlement? ③ Is the resettlement plan, including proper compensation, restoration of livelihoods and living standards developed based on socioeconomic studies on resettlement? ④ Does the resettlement plan pay particular attention to vulnerable groups or persons, including women, children, the elderly, people below the poverty line, ethnic minorities, and indigenous peoples? ⑤ Are agreements with the affected persons obtained prior to resettlement? ⑥ Is the organizational framework established to properly implement resettlement? Are the capacity and budget secured to implement the plan? ⑦ Is a plan developed to monitor the impacts of resettlement?	A dam at Rio Indio would affect 1,834 persons
	(2) Living and Livelihood	① Is there a possibility that the project will adversely affect the living conditions of inhabitants? Are adequate measures considered to reduce the impacts, if necessary? ② Is there a possibility that the amount of water (e.g., surface water, groundwater) used by the project will adversely the downstream fisheries and other water uses? ③ Is there a possibility that water-borne or water-related diseases (e.g., schistosomiasis, malaria, filariasis) will be introduced?	
	(3) Heritage	① Is there a possibility that the project will damage the local archeological, historical, cultural, and religious heritage sites? Are adequate measures considered to protect these sites in accordance with the country's laws?	No known local archeological sites
	(4) Landscape	① Is there a possibility that the project will adversely affect the local landscape? Are necessary measures taken?	No.
	(5) Ethnic Minorities and Indigenous Peoples	① Does the project comply with the country's laws for rights of ethnic minorities and indigenous peoples? ② Are considerations given to reduce the impacts on culture and lifestyle of ethnic minorities and indigenous peoples?	Yes.

Annex B-3

Category	Environmental Item	Main Check Items	Confirmation of Environmental Considerations
5 Others	(1) Impacts during Construction	① Are adequate measures considered to reduce impacts during construction (e.g., noise, vibrations, turbid water, dust, exhaust gases, and wastes)? ② If construction activities adversely affect the natural environment (ecosystem), are adequate measures considered to reduce impacts? ③ If construction activities adversely affect the social environment, are adequate measures considered to reduce impacts? ④ If necessary, is health and safety education (e.g., traffic safety, public health) provided for project personnel, including workers?	ACP will take necessary counter measures in order to minimize the impacts according to recommendation from the EIA report.
	(2) Monitoring	① Does the proponent develop and implement monitoring program for the environmental items that are considered to have potential impacts? ② Are the items, methods and frequencies included in the monitoring program judged to be appropriate? ③ Does the proponent establish an adequate monitoring framework (organization, personnel, equipment, and adequate budget to sustain the monitoring framework)? ④ Are any regulatory requirements pertaining to the monitoring report system identified, such as the format and frequency of reports from the proponent to the regulatory authorities?	All studies related to this project recommend adequate monitoring systems
6 Note	Note on Using Environmental Checklist	If necessary, the impacts to transboundary or global issues should be confirmed (e.g., the project includes factors that may cause problems, such as transboundary waste treatment, acid rain, destruction of the ozone layer, or global warming).	Positive transboundary impact

1) Regarding the term “Country’s Standards” mentioned in the above table, in the event that environmental standards in the country where the project is located diverge significantly from international standards, appropriate environmental considerations are made, if necessary.

In cases where local environmental regulations are yet to be established in some areas, considerations should be made based on comparisons with appropriate standards of other countries (including Japan' experience).

2) Environmental checklist provides general environmental items to be checked. It may be necessary to add or delete an item taking into account the characteristics of the project and the particular circumstances of the country and locality in which it is located.

Annex C-1

Category	Environmental Item	Main Check Items	Confirmation of Environmental Considerations
1 Permits and Explanation	(1) EIA and Environmental Permits	① Have EIA reports been officially completed? ② Have EIA reports been approved by authorities of the host country's government? ③ Have EIA reports been unconditionally approved? If conditions are imposed on the approval of EIA reports, are the conditions satisfied? ④ In addition to the above approvals, have other required environmental permits been obtained from the appropriate regulatory authorities of the host country's government?	Same as checklist of River and Canal Project
	(2) Explanation to the Public	① Are contents of the project and the potential impacts adequately explained to the public based on appropriate procedures, including information disclosure? Is understanding obtained from the public? ② Are proper responses made to comments from the public and regulatory authorities?	Same as checklist of River and Canal Project
2 Mitigation Measures	(1) Air Quality	① Do air pollutants, (such as sulfur oxides (SOx), nitrogen oxides (NOx), and soot and dust) emitted from the proposed infrastructure facilities and ancillary facilities comply with the country's emission standards and ambient air quality standards?	Local Environment agency enforces these regulations
	(2) Water Quality	① Do effluents or leachates from various facilities, such as infrastructure facilities and the ancillary facilities comply with the country's effluent standards and ambient water quality standards?	Same as checklist of River and Canal Project
	(3) Wastes	① Are wastes from the infrastructure facilities and ancillary facilities properly treated and disposed of in accordance with the country's standards?	Same as checklist of River and Canal Project
	(4) Soil Contamination	① Are adequate measures taken to prevent contamination of soil and groundwater by the effluents or leachates from the infrastructure facilities and the ancillary facilities?	Local Environment agency enforces these regulations
	(5) Noise and Vibration	① Do noise and vibrations comply with the country's standards?	Local Environment agency enforces these regulations
	(6) Subsidence	① In the case of extraction of a large volume of groundwater, is there a possibility that the extraction of groundwater will cause subsidence?	Local Environment agency enforces these regulations
	(7) Odor	① Are there any odor sources? Are adequate odor control measures taken?	Local Environment agency enforces these regulations
3 Natural Environment	(1) Protected Areas	① Is the project site located in protected areas designated by the country's laws or international treaties and conventions? Is there a possibility that the project will affect the protected areas?	Same as checklist of River and Canal Project

Annex C-2

Category	Environmental Item	Main Check Items	Confirmation of Environmental Considerations
3 Natural Environment	(2) Ecosystem	① Does the project site encompass primeval forests, tropical rain forests, ecologically valuable habitats (e.g., coral reefs, mangroves, or tidal flats)? ② Does the project site encompass the protected habitats of endangered species designated by the country's laws or international treaties and conventions? ③ If significant ecological impacts are anticipated, are adequate protection measures taken to reduce the impacts on the ecosystem? ④ Is there a possibility that the amount of water (e.g., surface water, groundwater) used by the project will adversely affect aquatic environments, such as rivers? Are adequate measures taken to reduce the impacts on aquatic environments, such as aquatic organisms?	Same as checklist of River and Canal Project
	(3) Hydrology	① Is there a possibility that hydrologic changes due to the project will adversely affect surface water and groundwater flows?	Same as checklist of River and Canal Project
	(4) Topography and Geology	① Is there a possibility the project will cause large-scale alteration of the topographic features and geologic structures in the project site and surrounding areas?	Same as checklist of River and Canal Project
4 Social Environment	(1) Resettlement	① Is involuntary resettlement caused by project implementation? If involuntary resettlement is caused, are efforts made to minimize the impacts caused by the resettlement? ② Is adequate explanation on relocation and compensation given to affected persons prior to resettlement? ③ Is the resettlement plan, including proper compensation, restoration of livelihoods and living standards developed based on socioeconomic studies on resettlement? ④ Does the resettlement plan pay particular attention to vulnerable groups or persons, including women, children, the elderly, people below the poverty line, ethnic minorities, and indigenous peoples? ⑤ Are agreements with the affected persons obtained prior to resettlement? ⑥ Is the organizational framework established to properly implement resettlement? Are the capacity and budget secured to implement the plan? ⑦ Is a plan developed to monitor the impacts of resettlement?	Same as checklist of River and Canal Project
	(2) Living and Livelihood	① Is there a possibility that the project will adversely affect the living conditions of inhabitants? Are adequate measures considered to reduce the impacts, if necessary?	Same as checklist of River and Canal Project
	(3) Heritage	① Is there a possibility that the project will damage the local archeological, historical, cultural, and religious heritage sites? Are adequate measures considered to protect these sites in accordance with the country's laws?	Same as checklist of River and Canal Project
	(4) Landscape	① Is there a possibility that the project will adversely affect the local landscape? Are necessary measures taken?	Same as checklist of River and Canal Project

Annex C-3

Category	Environmental Item	Main Check Items	Confirmation of Environmental Considerations
4 Social Environment	(5) Ethnic Minorities and Indigenous Peoples	① Does the project comply with the country's laws for rights of ethnic minorities and indigenous peoples? ② Are considerations given to reduce the impacts on culture and lifestyle of ethnic minorities and indigenous peoples?	Same as checklist of River and Canal Project
5 Others	(1) Impacts during Construction	① Are adequate measures considered to reduce impacts during construction (e.g., noise, vibrations, turbid water, dust, exhaust gases, and wastes)? ② If construction activities adversely affect the natural environment (ecosystem), are adequate measures considered to reduce impacts? ③ If construction activities adversely affect the social environment, are adequate measures considered to reduce impacts? ④ If necessary, is health and safety education (e.g., traffic safety, public health) provided for project personnel, including workers?	Same as checklist of River and Canal Project
	(2) Monitoring	① Does the proponent develop and implement monitoring program for the environmental items that are considered to have potential impacts? ② Are the items, methods and frequencies included in the monitoring program judged to be appropriate? ③ Does the proponent establish an adequate monitoring framework (organization, personnel, equipment, and adequate budget to sustain the monitoring framework)? ④ Are any regulatory requirements pertaining to the monitoring report system identified, such as the format and frequency of reports from the proponent to the regulatory authorities?	Same as checklist of River and Canal Project
6 Note	Reference to Checklist of Other Sectors	① Where necessary, pertinent items described in the Roads and Railways checklist should also be checked (e.g., projects including access roads to the infrastructure facilities). ② For projects, such as installation of telecommunication cables, power line towers, and submarine cables, where necessary, pertinent items described in the Electric Power Transmission and Distribution Lines, and Oil and Gas Pipelines checklists should also be checked.	Same as checklist of River and Canal Project
	Note on Using Environmental Checklist	① If necessary, the impacts to transboundary or global issues should be confirmed (e.g., the project includes factors that may cause problems, such as transboundary waste treatment, acid rain, destruction of the ozone layer, or global warming).	Same as checklist of River and Canal Project

* For the communication infrastructure projects, applicable items are 1 (1)(2), 3(1)(2), 4 (1)-(5) and 5(1)(2), and only these items should be checked.

1) Regarding the term "Country's Standards" mentioned in the above table, in the event that environmental standards in the country where the project is located diverge significantly from international standards, appropriate environmental considerations are made, if necessary.

In cases where local environmental regulations are yet to be established in some areas, considerations should be made based on comparisons with appropriate standards of other countries (including Japan' experience).

2) Environmental checklist provides general environmental items to be checked. It may be necessary to add or delete an item taking into account the characteristics of the project and the particular circumstances of the

Executive Summary

FINAL REPORT

ON
FABRICATION, INSTALLATION, AND COST ESTIMATES FOR
THE NEW LOCK GATES OF THE PANAMA CANAL
PREPARED FOR
THE AUTHORITY OF PANAMA CANAL
PERFORMED BY
THE STUDY TEAM OF
JAPAN BANK FOR INTERNATIONAL COOPERATION

JANUARY, 2004

Executive Summary

Introduction

This Study on the fabrication, installation, and the cost estimates for the New Lock Gates of the Panama Canal has been undertaken by the JBIC Study Team (hereinafter called "The Study Team") based on the TOR agreed on the 15th of September in 2003 with the ACP and the Study Team. The Draft Final Report has been submitted to the ACP on the 4th of December in compliance with the TOR despite the very limited studying period. On the 11th of the same month, as stipulated in the TOR, a technical transfer seminar in relation to the essential contents of the Draft Final Report was taken place in the ACP office for the relative staff of the ACP. The papers presented in the seminar are also attached in the Appendix of this Report.
This executive summary is the essential parts of the Final Report revised and refined by the comments provided by the ACP to the Draft Final Report.

The Objective of the Study

▪The objectives of the Study are as follows;

1) To provide an integral information for determining the feasibility of building the Post-Panamax Lock Gates,
2) To recommend and provide the best option of construction methodology on fabrication, transportation and installation methods as well as cost

estimates for both Miter Gate and Rolling Gate independently, including special facilities and equipment requirements taking into consideration of the adequacy of using presently available local facilities, personnel and equipment in Panama and surrounding countries.

Socio-Economic Aspects of Panama and Socio-Environmental Consideration of the Project

(1) In Chapter 1, a short history, socio-economic and political aspects are put together in brief to understand the Republic of Panama, where the project is going to be undertaken. The Panama Canal and the various ongoing investments projects in the extensive past military areas which were reverted at the end of 1999 are going together to have big effects on the socio-economic aspects of the Republic. The focal policies of the present Government to correct the socio-economic gaps existing among the provinces are facing big difficulties under the strong pressures from the other side policies to reduce enormous amount of foreign debts. In this context, it is widely perceived that the Panama Canal Expansion Project, if executed, shall provide big economic benefits not only to the Canal users and to various port related businesses but also to the economy of Panama as a whole by enlarging the "pie", and possibly to open a new page for her history.

(2) In Chapter 12, such socio-environmental impacts as presumably be foreseen in the stage of executing the Project, and also countermeasures are described. The ACP has already started preparing various studies on impact and countermeasures taking into well consideration of the international standards. However, at the present moment, when the magnitude and the exact impacted areas have not yet been assured, the information relating to the environmental impacts from this expansion project are still limited in the stage of "base-line information collecting."

Premises of the Study

- Several premises of this Study were confirmed in Chapter 2, Premises of the Study, as follows;

1) The Configuration of the New Lock Gates and the Type of Gates

The US Army of Corps of Engineers (USACE) is conducting conceptual designs of Miter Gate Type at the Atlantic side, and the Consorcio Post-Panamax (CPP) is conducting conceptual designs for Rolling Gate Type at the Pacific side. The data directly relating to the study of gate from the results of the said studies have been supplied by the ACP. There are 7 different heights of gates. The configurations of the locks and the height of gates are revisited in the image drawings. (Fig. 2.1-3)

2) The Alignments of the New Locks

Both the Atlantic and the Pacific alignments of the New Locks were confirmed in the ACP's drawings. (Fig. 2.1-1, 2)

3) Estimation on the Weights of Gates

The Study Team estimated the weights of each gate as basic data for using in the following stage to calculate work loads in fabrication, transportation, installation and cost estimates.

The heaviest gate of miter gates is 3,216 tons for the case of 2-Lift (with double skin) configuration. In the case of rolling gate, the heaviest gate is 4,580 tons for 2-Lift (with double skin).

For security reasons, each set of lock gate is composed by the dual set of gate leaves. Therefore, the 2-Lift lock gate is composed by 6 set of gates leaves (12 pieces of gate leaves), the 3-Lift lock gate is composed by 8 set of gate leaves (16 pieces of gate leaves). In the case of rolling gate, as the one gate is composed by a set of gate, 2-Lift lock gate is composed by 6 set of gates(6 pieces of gate leaves), and the 3-Lift lock gate is composed by 8 set of gates (8 pieces of gate leaves).

4) The Flow Chart of the Study Undertaken by the Study Team

The flow chart of study works to be undertaken by the Study Team has been included in the TOR agreed on between the ACP and the Study Team. All the standards to be applied in the Study are based on internationally prevailing standards for designing, materials to be used, painting and inspections.

5) Maximum Terrestrial Transportable Size in Panama

The divided parts (blocks) of gates are presumed to be transported by trucks from the port of Balboa. They are packed in a 40' container for the size of 12m in length, 2.3m in width and 2.5m in height, and the maximum

weight is calculated as 2.6tons.

Summary of the Study Results

1) The Research on Panamanian Venders' Capabilities

- The 2 Panamanian companies which have dry docks, a general construction company and a steel construction company have been evaluated their capabilities from the point of assembling and installing the gates in Chapter 3, Research on Panamanian Vendors' Capabilities.

  ACP Industrial Shipyard; having a dry dock (114m×17m×6m) and a Syncrolift (1,200 tons, to be enhanced in the future to 2,800 tons), the sizes of dry dock is too small to assemble the new gates.

  Astilleros Braswell; having 3 dry docks; (1)318m ×39m, Width of Entrance; 33.6m, (2) 130m×30.5m, (3) 70m×16.8m with the draft of 4~8m, at high tide of 15m, capable to assemble with some limitations.

2) Categorization of Construction Methods for the New Lock Gates

- More general methodologies to be applied to the fabrication, transportation and installation for the new lock gates of miter and rolling gates having 2-Lift and 3-Lift configurations were extracted in Chapter 4, Construction Methods of the New Lock Gates.
- The 3 groups were categorized or grouped as follows by analyzing study results of conceptual designs being undertaken by the USACE and CPP, by surveying capabilities of local Panamanian companies, transportation conditions of the ports and restrained terrestrial transportation conditions;

① Study Case (Ⅰ), the "one-unit methodology, transported by semi-submergible vessel, installed in wet conditions"

This methodology is to fabricate the gates in one-unit in overseas manufacturers, transported by semi-submergible vessels to Panama, towed by tugboats to the construction site, installed in the wet conditions in the Canal. (See the attached photos of Semi-submergible Vessel)

② Study Case (Ⅱ), the "blocks, assembled in Panama to one-unit, installed in wet conditions"

This methodology is to fabricate the gates in overseas manufacturers in blocks to the size of terrestrial transportation limitations of Panama, transported by cargo vessels to the port of Panama, unloaded to the ports and transported by trucks to dry docks. After unified to one-unit, towed to the construction sites by tug boats and installed in wet conditions.

③ Study Case (Ⅲ), the "blocks, site assembled & installation in dry conditions"

This methodology is to fabricate the gates in overseas manufactures in blocks to the size of terrestrial transportation limitations of Panama, transported by cargo vessels to the port of Panama, unloaded and transported by trucks to the construction sites, assembled and installed in dry conditions.

- There are 12 Cases in total for having 2 types of miter and rolling gates with 2-Lift and 3-Lift configurations (3 Study Cases×2 Types×2 Configurations=12). For identifying these individual cases, in the case of miter gate with 2 (Double)-Lift, named as M-D-(Ⅰ), M-D-(Ⅱ), M-D-(Ⅱ), in the case of rolling gate with 3(Triple)-Lift, named as R-T-(Ⅰ), R-T-(Ⅱ), R-T-(Ⅲ). (Ref. Study Results of the New Lock Gates)

- In the following pages, the essential points of studies, analyses and the evaluations on the methodology for fabrication, transportation and installation of miter gates and rolling gates in each study case are described.

3) Fabrication Methods

- A detailed fabrication flow, fabrication step diagram and fabrication schedules were prepared for each Study Case of miter gate and rolling gate. The characteristics pertaining to the methods, the necessary conditions for carrying out the methods and the proposals for solving the problems were clarified. Finally, evaluations were made in Chapter 5, Fabrication Methods.

Fabrication Period;

(1) In the case of miter gate, the fabrication periods were calculated on the assumption of 1,245 tons per month. In the case of rolling gate, the fabrication periods were calculated on the assumption of 1,500 tons per month. In any cases, the shortest period was 16 months and the longest was 24 months.

(2) In the case of miter gate, 2-Lift (the number of gate leaves is 12 in total) has shorter period of 4 to 5 months than 3-Lift (the number of gate leaves is 16 in total).

(3) In the case of rolling gate, 2-Lift with 6 leaves has 4 months shorter period than 3-Lift with 8 leaves.

(4) When the "blocks fabrication method" and "one-unit fabrication method" are compared with in any cases, 4 months are shorter, because in the former case, blocks are not profiled as a box, no reversal works are necessary in the course of fabrication, and also no yard assembly is necessary. (See fig. 5. 1. 1-5, 5.2.1.-8, 5.2.3-3)

Evaluation on the Gate Fabrication by Each Case;

(1) The results of the study on fabrication in each case were evaluated by the 3 criteria (A; Executable, B; Executable with conditions, C; Not executable).

(2) In fabrication, only the case of rolling gate by one-unit (Study Case (Ⅰ), 2-Lift, having the heaviest gate leaf of 4,580(R-D3d), some countermeasures might be necessary for bearing capacity of the assembly yard. Accordingly, the evaluation became "B" as "executable with conditions". Other Study Cases of (Ⅱ) and (Ⅲ) are evaluated "A" as "executable" without any problems.

4) Transportation Methods

- Transportation procedure, necessary equipments for transportation, maritime transportation means, packaging, draft of semi-submergible vessel and the draft of gate and transportation schedules were analyzed and studied in Chapter 6, Transportation Methods.

Miter Gate, One-unit Transportation Methods; Study Case (Ⅰ)

(1) The gates to be transported are so big in size, and the weight of each

leaf is from 1,210 tons (M-D1) to 1,494 tons (M-D3) that the floating crane for loading is assumed to use "Suruga" with the capacity of 2,200 tons.

(2) As the same floating crane are not available in Panama, the "semi-submergible vessels" are to be used for transporting the one-unit gate loaded in Yokohama to the nearest area of the Panama Canal for unloading and then towed by tug boats to the construction sites.

(3) When the "semi-submergible vessel" is used, the draft of gates to be transported becomes crucial. In the case of "Swan", the draft becomes 7.3m (submerging draft at 20.6m-sea water level at 13.3m) and the "Mighty Servants 3" have the draft of 10m (22m-12m). As miter gates are transported in horizontal manner, the maximum draft is 4.15m; there are no problems in draft.

(4) As the 4 pieces of gates are transported by a "semi-submergible vessel", the 12 pieces of gate leaves for 2-Lift can be transported by 3 semi-submergible vessels, and the 16 pieces of gate leaves by 4 vessels. About 44 days are calculated for arriving to Panama from Japan.

<u>Miter Gate, Blocks Transportation Methods; Study Case (II), (III)</u>

(1) The constraints of terrestrial transportation are considered. The maximum weight is 25 tons in 40' containers.

(2) The largest gate in the Atlantic side of 2-Lift is the sea-faced MD-2 with the height of 34.5m, weighing 3,238 tons per 1 set of gate (a pair of gate). If they are packed by 14 tons per 1 block, the total numbers of containers become 230. The maximum weight of containers is 25 tons.

(3) As the 2 set of gates (=4 pieces of gate leaves) are transported by one vessel, the number of shipments becomes the same as one-unit transportation. In the case of 2-Lift, total shipments are 3 times and the 3-Lift are 4 times. From the point of efficiency of cargo handling, cargo vessel at the class of 20 thousands tonnage equipped with deck cranes are to be used. The same vessel is also assumed to be used in the case of block transportation for next rolling gates.

<u>Rolling Gate, One-unit Transportation Method, Study Case (I)</u>

(1) The range of weight of one gate to be transported is from 1,900 tons

(R-T1) to 4,500 tons (R-D3). The floating cranes to be used for loading are Suruga with the capacity of 2,200 tons and Musashi of 3,600 tons. For loading the gate of 4,500 tons, two set of cranes of Musashi with the capacity of 3,600 tons are to be used.

(2) Assuming that the floating cranes with the same capacity are not available in Panama, semi-submergible vessels are used to carry the one-unit gates from Yokohama to Panama and from there on to be towed by tug boats to the construction sites.

(3) As mentioned in miter gate transportation by the "semi-submergible vessel", the draft of gates to be transported becomes crucial. In the case of Swan, the draft is 7.3m and the Mighty Servants 3 have the draft of 10m. As the rolling gates are transported in the perpendicular in accordance with the present design, the draft is around 13.9m~17.1m. It is impossible to transport them by semi-submergible vessels.

(4) Following countermeasures to lower the draft to at least 9.5m are necessary to transport them by the semi-submergible vessels; a) by mounting an auxiliary float to lower the draft, b) by modifying the structure of the gate leaf to be able to transport horizontally, c) by using high strength steel to reduce entire weight, d) by combining the above modifications to lower the draft.

On the assumption that the draft problems are solved by using the above countermeasures, transportation methods were analyzed.

(5) It became clear that the one set of gate is transported by the one semi-submergible vessel. Accordingly, 2-Lift composed by 6 pieces of gate leaves are shipped by 3 vessels, and 3-Lift composed by 8 pieces of gate leaves are shipped by 4 vessels.

<u>Rolling Gate, Blocks Transportation Methods; Study Case (II)</u>

(1) The constraints of terrestrial transportation are considered. The maximum weight is 25 tons in 40' containers.

(2) The largest gate of 2-Lift in the Pacific side is the sea-faced R-D3 with the height of 34.5m, weighing 4,730 tons per 1 set of gate. If they are packed at maximum of 24 tons, the total numbers of containers become 707.

(3) Although the number of shipments is decided by the delivering conditions, the same numbers as in the case of one-unit transportation for rolling gate are assumed. It is important to

make sure, in any case, the timing of fabrication, transportation and installation before beginning all the construction works.

Evaluation on the Transportation Methods by Each Case;

(1) Only one-unit transportation of rolling gate became impossible by means of semi-submergible vessel for the reason of draft limitations. Other cases have no problems.
(2) In the case of Miter Gate, the 3-Lift can pass thorough the Panama Canal, on the contrary the 2-Lift can not. In the case of Rolling Gate, both the 2-Lift and 3-Lift cannot pass the Canal for being transported in perpendicular. Although this theme is out of scope of this study, if the same gate type is required to be selected in the both Oceans, only 3-Lift Miter Gate might be eligible.

5) Installation Methods

- For each study case, installation conditions, installation procedures, step diagrams, working schedules were prepared. Required manpower and necessary machines and equipments were estimated. As to manpower, assembling and installing works to be undertaken in Panama were estimated in accordance with job categories. Equipments are estimated in accordance with the type of machines. The study is done in Chapter 7, Installation Methods

Miter and Rolling Gates, One-unit Installation Methods; Study Case (Ⅰ)

(1) In these cases, the gates are manufactured outside of Panama, transported to the construction sites to be installed. Therefore, the working forces required in Panama became one sixth compared with the block methods mentioned later. The 3-Lift is requiring more workers than 2-Lift in Panama, because more gates are assembled and installed in Panama.
(2) The 2-Lift of Miter Gate, 63,000 workers are required, 3-Lift of Miter Gate, 85,000 workers. The 2-Lift of Rolling Gate, 50,000, the 3-Lift, 54,000. The 3-Lift of each gate requires 30% and 8% more workers respectively than 2-Lift.

Miter Gate, Blocks Installation Methods, Study Case (Ⅱ) ;

(1) After manufactured outside of Panama, the blocks are transported by cargo ships to the port of Panama, unloaded to the dry docks in Panama to unify them into one-unit, then towed to the construction sites to be installed in wet condition. The assembling at the dry docks in Panama is also recommended in the conceptual designs. Assembling in the dry dock in Panama is limited by the size of dry dock in Panama.

(2) The ACP Industrial Shipyard in the Atlantic side has a dry dock of 114m in length and 17m in width. The Miter Gate has the size of 22.34m~34.5m in width and 22.34m~36.5m in height. When the gate is completed in horizontal, the completed gates can not be carried out.

(3) Even the Braswell's biggest dray dock having entrance width of 33.6m is not enough for the biggest gates of M-D-d2 and M-D-d3 of 2-Lift(34.5m×35.47m×4.15m) to take out after unified.

Rolling Gate, Blocks Installation Methods, Study Case (Ⅱ);

(1) The same as Miter Gate mentioned above, after assembled in the dry dock of Braswell Shipyard in the Pacific side, unified one-unit rolling gate are not to be taken out from the dry dock.

(2) Although the maximum draft at high tides is 15.2m, normal draft is only around 4~8m. The draft of Rolling Gates are 14~17m, some gates can be taken out, some gates can't.

Evaluation on the Installation Methods of Each Study Case;

(1) The Block Installation Methods for Miter Gate and Rolling Gate (Study Case Ⅱ) became not to be executable caused by the size limitation of dry dock of Braswell Shipyard in the Pacific side.

(2) There are no problems in the other cases (Study Case, Ⅰ, Ⅲ)

6) Technical Evaluation on Miter Gate & Rolling Gate

- At the end of each chapter, evaluations were made whether the methods are executable or not for fabrication in Chapter 5, transportation in Chapter 6 and installation in Chapter 7 respectively. In Chapter 8 again, the past evaluations were re-evaluated from the point of

"technical" criteria in comparison with the following "cost" and "construction schedule" evaluations.

- Through the technical evaluation, the Study Cases (Ⅰ), (Ⅲ) are to be executable, but (Ⅱ) is evaluated "C" as not executable by the limitation of size of Braswell Shipyard. The Rolling Gate, Study Case (Ⅲ) has no problem. Study Case (Ⅰ)has the problem in transportation (the draft of gate is more than 10m) ,the evaluation became "C" as not to be executable.

Evaluation on Construction Period;

(1) All working period including the construction period of fabrication, transportation and installation of gates and the other civil works were put into together for evaluation. Such works as to put the frames, handling machines and control systems are presumed to be done within the same period, all working period including civil works are to be done within 72months (6 years).

(2) In the case of Miter Gate, the Study Case (Ⅰ) and (Ⅱ) of 2-Lift became 71 months, the Study Case (Ⅲ) 75 months. The 3-Lift, the Study Case (Ⅰ), (Ⅱ), (Ⅲ) became 76.5 months, 76.5 months and 90 months respectively.

(3) In the case of Rolling Gate, the Study Case (Ⅰ) and (Ⅱ) of 2-Lift became 61 months and 63.5 months respectively, the Study Case (Ⅲ) 76.5 months. The 3-Lift, the Study Case (Ⅰ), (Ⅱ), (Ⅲ) became 78 months, 78 months and 94 months respectively.

(4) Those cases staying within 72 months (=6 years) are evaluated as "A", within 73 to 78 months are evaluated as "B", more than 79 months as "C".

(5) The Study Case (Ⅰ) and (Ⅱ) of the 2-Lift of Miter Gate and Rolling Gate are evaluated as "A". The Study Case (Ⅲ) of the 2-Lift and the Study Case (Ⅰ) and (Ⅱ) of the 3-Lift are "B", the Study Case (Ⅲ) is "C".

The International Formation for Fabrication and Installation;

- The international formation for fabrication and installation of gates were prepared taking into consideration of the results of the surveys on venders. The 5 formations were prepared; Japan, the U.S.A., Europe, Latin America and Panama. Installation works are to be done by the

Panamanian companies under the technical advices.

- In Latin American countries, 2 companies (Maua-Jurong, Alstom) from Brazil, 1 company (Consorcio Industrial) from Mexico, 1 company (Venezuelan Heavy Industries) from Venezuela were surveyed as potential venders.

7) Cost Estimates on Gates

- Cost estimates were made in Chapter 9, Cost Estimates for the New Lock Gates.

(1) The construction costs (initial costs) were estimated using in-house data and taking into consideration of information provided by the ACP. Maintenance costs for the period of 100 years after the construction were also estimated, and the life cycle costs were estimated adding the maintenance costs to the initial costs.

(2) In the initial costs, such costs as designing, fabrication of gates and relating machines (frames, operating machines and controlling equipments), transportation and installation are included. As to the installation and transportation in Panama, domestic costs of Panama were utilized. The manning cost data are coming from Chapter 7. The costs estimates were made for 2-Lift and 3-Lift for Miter and Rolling Gates, totaling 12 cases.

(3) In both the Miter Gate and the Rolling Gate, the blocks method is 10% cheaper than the one-unit method for more works are going to be done in Panama.

(4) The fabrication costs of gates are occupying 70% to 80 % in the total construction costs. Especially in the case of one-unit fabrication method, as all parts are fabricated in overseas, the fabrication costs occupy 85% in all costs. On the contrary, the works are small in Panama; the installation costs are limited to only 5 % in all costs. The Study Case of (II) and (III) in blocks method, as the assembling and installing works are larger in Panama for 20 % in all costs, 3 to 4 times higher than one-unit methods.

(5) Comparing Miter and Rolling Gates, in both 2-Lift and 3-Lift, the Rolling Gates are more expensive than Miter Gates. Comparing 2-Lift and 3-Lift, the 3-Lift is more expensive for having more numbers of gate leaves.

(6) In the case of Miter Gates, the least initial cost is US$170 millions in the Study Case (Ⅲ), 2-Lift, and the most expensive is US$ 215 millions in the Study Case (Ⅰ), 3-Lift. The difference of the two cases is 26.5% (US$ 45 millions). In the case of Rolling Gates, the least cost is US$ 180 millions in the Study Case (Ⅲ), 2-Lift, and the most expensive is US$ 225 millions in the Study Case (Ⅰ), 3-Lift. The difference of the two cases is 25% (US$ 45 millions).

(7) Comparing 2-Lift and 3-Lift, although the latter has more numbers of gate leaves, as each gate is smaller than the former, fabrication and transportation are easier than the former.

The Comparison of Life Cycle Costs;

(1) The maintenance costs for Miter Gates and Rolling Gates were estimated by calculating the present costs in 100 years after completion of the construction, and also estimated life cycle costs by adding to the initial costs.

(2) The maintenance costs; In the case of Miter Gates, 2-Lift were estimated at US$ 135 millions, 3-Lift at US$ 156 millions, and for the Rolling Gates, 2-Lift at US$ 111 millions, 3-Lift at US$ 138 millions.

(3) Comparing the two types of gates in life cycle costs in 100 years, at 20 or 35 years in the 2-Lift, at 25 years in the 3-Lift, come across (break even points) each other. The Rolling Gates become cheaper after these points than Miter Gates. The biggest reason is that the maintenance works are done in the recess of Rolling Gates, on the contrary, the Miter Gates are necessary to be removed from the place for painting outside of Lock Chamber.

(4) Comparing life cycle costs for each Study Case. The cheapest one in 100 years is the Study Case (Ⅲ) , 2-Lift of Rolling Gates at US$ 291 millions, and the most expensive one is Study Case (Ⅰ) , 3-Lift of Miter Gates at US$ 371 millions. In the following Comprehensive Comparison, comparative comparisons were made by putting 1.0 for the cheapest cost case as the basic figure.

8) Comprehensive Comparison

- In Chapter 8, technical evaluations were made as to the fabrication, transportation, installation methods, and also construction periods, and

in Chapter 9 initial costs and maintenance costs were estimated. In Chapter 10, taking into consideration of the above results, a comprehensive evaluation was made. In this study, the both types of gates were not to be evaluated in the same way, but to be evaluated independently.

(1) As the result of comprehensive evaluation in Miter Gates, the Study Case (Ⅰ), 2-Lift is selected as No. 1 from the points of construction period and quality, and the Study Case (Ⅲ), 2-Lift as No. 2 from the costly wise. The Study Team recommends the former one, as the comprehensive evaluation is "A", the difference of costs is within 10%, the installation period is shorter, total construction period is the shortest and the quality is better for all the welding and painting works are to be done in the overseas factories.

(2) As to the Rolling Gates, the Study Case (Ⅰ), 2-Lift is selected as No. 1 from the points of construction period and quality, and the Study Case (Ⅲ), 2-Lift as No. 2 from the costly wise. The Study Team recommends the former one, as the difference of costs is within 5%, the installation period at sites is shorter, total construction period is the shortest and the quality is better for all the welding and painting works are to be done in the overseas factories.

Appendix

The following two documents are attached;

A) Visual Presentation Papers compiled from the Draft Final Report presented at the ACP office on the occasion of technical transfer seminar held on December 11, 2003.

B) Visual Presentation Papers compiled from the Final Report submitted on 30th of January, 2004.