TECHNICAL RESOURCES CENTER - P.C.C.
00001164343
06 OCT. 2004

ACP
AUTORIDAD DEL CANAL DE PANAMÁ

Contract No. CC-3-557

Architectural and Engineering Services for Engineering Site and Assessment, Conceptual Design and Related Services

PRELIMINARY STUDY OF ISLAND DEVELOPMENT AT THE PACIFIC ENTRANCE OF THE PANAMA CANAL

Final Report

Volume 2 of 2

(Technical Appendices)

December, 2001

UNAUTHORIZED USE OR DUPLICATION IS PROHIBITED
PROHIBIDA LA REPRODUCCION SIN AUTORIZACION DEL AUTOR

CENTRO DE RECURSOS TECNICOS
AUTORIDAD DEL CANAL DE PANAMA

CONTENTS

Introduction

Technical Appendices

A. MEETINGS RECORD

B. QUICKTERM CONTAINER SIZING MODEL

C. CROSS SECTION OF CONTAINER BERTH

D. TRANSPORTATION COST MODELS & COMPUTATIONS

E. RAIL VERTICAL ALIGNMENT

F. REFERENCES – WAVE STUDY

G. DATA LISTING

INTRODUCTION

This technical Appendix includes back up and cost estimate information used to derive the tables, figures and conclusions presented in the Executive Summary and the main volume of the Final Report.

Due to the relatively brief time for preparation of this study, the reader may find minor discrepancies or inconsistencies in the detailed calculations and model inputs. However, these do not change the conclusions or summarized information presented in the report.

The cost, transportation and planning models presented in this Appendix were prepared specifically for this project, and are proprietary to the Consultants. Their unauthorized use or adaptation for anything other than the subject study is strictly prohibited.

A MEETINGS RECORD

From July 30 to August 3, 2001, the consultant team met with ACP staff, public agency representatives and commercial executives with an interest in the project. Participants in the meetings are listed below:

Helicopter Overfly of Pacific Sector

0800 hrs, July 30, 2001

Present:

Ing. Agustin Arias, Marcelo de la Rosa, John Ricklefs, Paul DeCelles, Onesimo Sanchez.

Launch Trip to Pacific Sector

Present:

Ing. Agustin Arias, Onesimo Sanchez, Ing. Patricia de Baquero, Hortensia Broce, John Gribar, Marcelo de la Rosa, John Ricklefs, Paul DeCelles.

Meeting with ACP Adminlstrator

1400 hrs, July 30, 2001

Present:

Adminstrator Alberto Aleman Zubieta, Ing. Agustin Arias, Ms Yolanda Chin, Onesimo Sanchez, Ing. Patricia de Baquero, Hortensia Broce, John Gribar, Marcelo de la Rosa, John Ricklefs, Paul DeCelles, Jorge Quijano, Rodolfo Sabonge, Ricaurte Vasquez, Manuel Benitez, Luis Alfaro, Mercedes Morris, Luis Alvarado.

Visit to Howard air base (ARI)

0800, July 31, 2001.

Present:

Ing. Agustin Arias, Ms Yolanda Chin, Onesimo Sanchez, Ing. Patricia de Baquero, Hortensia Broce, Marcelo de la Rosa, Alfredo Díaz, Michael Horton, John Ricklefs, Paul DeCelles.

Alireza Movil Terminales S.A.

0930hrs, July 31, 2001.

Present:

Ing. Agustin Arias, Ms Yolanda Chin, Onesimo Sanchez, Ing. Patricia de Baquero, Hortensia Broce, Marcelo de la Rosa, Alfredo Díaz, Michael Horton, John Ricklefs, Paul DeCelles.

Atlantic Pacific S.A. (APSA)

1100hrs, July 31, 2001.

Present:

Ing. Agustin Arias, Ms Yolanda Chin, Onesimo Sanchez, Ing. Patricia de Baquero, Hortensia Broce, Marcelo de la Rosa, Alfredo Díaz, Michael Horton, John Ricklefs, Paul DeCelles.

Autoridad Marítima de Panamá (APM)

1300hrs, July 31, 2001.

Present:

Ing. Agustin Arias, Ms Yolanda Chin, Onesimo Sanchez, Ing. Patricia de Baquero, Hortensia Broce, Alfredo Díaz, Michael Horton, John Ricklefs, Paul DeCelles.

Autoridad de la Region Interoceánica (ARI)

1445 hrs, July 31, 2001.

Present:

Ing. Agustin Arias, Ms Yolanda Chin, Onesimo Sanchez, Ing. Patricia de Baquero, Hortensia Broce, Alfredo Díaz, Michael Horton, John Ricklefs, Paul DeCelles.

ICA Panama SA

1700 hrs, July 31, 2001.

Present:

Ing. Agustin Arias, Ing. Yolanda Chin, Patricia de Baquero, Hortensia Broce, Alfredo Diaz, Marcelo de la Rosa, Michael Horton, John Ricklefs, Paul DeCelles.

Colon 2000

0830 hrs, August 1, 2001.

Present:

Ing. Agustin Arias, Ms Yolanda Chin, John Gribar, Onesimo Sanchez, Walter Luchsinger, Eduardo Lugo, Michael Horton, John Ricklefs.

Manzanillo International terminal (MIT)

0930hrs, August 1, 2001

Present:

Ing. Agustin Arias, Ms Yolanda Chin, John Gribar, Onesimo Sanchez, Walter Luchsinger, Eduardo Lugo, Michael Horton, John Ricklefs.

Colon container Terminal (CCT)

1115hrs, August 1, 2001.

Present:

Ing. Agustin Arias, Ms Yolanda Chin, John Gribar, Onesimo Sanchez, Walter Luchsinger, Eduardo Lugo, Michael Horton, John Ricklefs.

Colon Free Zone

1400hrs, August 1, 2001.

Present:

Ing. Agustin Arias, Ms Yolanda Chin, John Gribar, Onesimo Sanchez, Walter Luchsinger, Eduardo Lugo, Michael Horton, John Ricklefs.

Visit to Gatun Locks

1530hrs, August 1, 2001.

Present:

Ing. Agustin Arias, Ms Yolanda Chin, John Gribar, Onesimo Sanchez, Walter Luchsinger, Eduardo Lugo, Michael Horton, John Ricklefs.

ANAM

1000 hrs, August 1, 2001

Hortensia Broce, Maria Vasquez, Luis Alvarado, Marcelo de la Rosa, Alfredo Diaz

ANAM – Ricardo Anguizola

ESM Personnel

1300 hrs, August 1, 2001

Hortensia Broce, Maria Vasquez, Marcelo de la Rosa, Alfredo Diaz

ESM

Panama Canal Railroad

0730hrs, August 2, 2001.

Present:

Ing. Agustin Arias, Ms Yolanda Chin, Ing. Walter Luchsinger, Eduardo Lugo, Onesimo Sanchez, Michael Horton, John Ricklefs.

Centro Multimodal Industrial y de Servicios SA (CEMIS)

0945 hrs, August 2, 2001.

Present:

Ms Yolanda Chin, Ing. Walter Luchsinger, Eduardo Lugo, Onesimo Sanchez, Michael Horton, John Ricklefs.

Maersk Sealand

1030hrs, August 2, 2001.

Present:

Ing. Agustin Arias, Ing. Walter Luchsinger, Eduardo Lugo, Onesimo Sanchez, Michael Horton, John Ricklefs.

Autoridad del canal de Panama – Maritime Operations

1315hrs, August 2, 2001.

Present:

Ing. Agustin Arias, Ing. Walter Luchsinger, Eduardo Lugo, Onesimo Sanchez, Michael Horton, John Ricklefs.

Kick off meeting ACP

1440hrs, August 2, 2001.

Present:

COSCO Panama Maritime SA

0930 hrs, August 3, 2001

Present: Ing. Agustin Arias, Ms Yolanda Chin, Ing. Walter Luchsinger, Eduardo Lugo, Onesimo Sanchez, Michael Horton, John Ricklefs.

Petro Terminal de Panama S.A.

1115 hrs, Aug 3, 2001

Present: Ing. Agustin Arias, Ms Yolanda Chin, Ing. Walter Luchsinger, Eduardo Lugo, Onesimo Sanchez, Michael Horton, John Ricklefs.

Autoridad de la Region Interoceanica (ARI)

1345 hrs, Aug 3, 2001

Present: Ing. Agustin Arias, Ms Yolanda Chin, Ing. Walter Luchsinger, Eduardo Lugo, Onesimo Sanchez, Michael Horton, John Ricklefs.

B QuickTerm Container Sizing Model

The Moffatt & Nichol proprietary "Quick-Term" software application was used to size the container terminal module recommended for the island project. Input and output from the model are contained in the following computation sheets.

MOFFATT & NICHOL
ENGINEERS

"NET CY" CONTAINER STORAGE YARD SIZING MODEL

Transshipment/Distribution Center Container Module

(Version 12.02.98)

Project Title:	**Panama Pacific Island Study**
Job Number:	
User:	**R. Bennett/M Horton**
Date:	**November 9, 2001**

Basic Model Assumptions: (User Input)

Annual Throughput (lifts)	675,000
Actual Net C.Y. (acres) If Known	0.0
Percent of 40' Containers	40.0%

Summary Results:

Annual Throughput (TEU)	945,000
Net C. Y. Area Required (Hectares)	29.1
Additional C.Y. Required (Hectares)	29.1

Storage Capacity Required	
40' Wheeled (Slots)	0
20' Wheeled (Slots)	0
Rubber Tired Gantry (TEU)	15,298
Top Pick (TEU)	5,245
Side Pick (TEU)	9,616
Straddle Carrier (TEU)	0
Total Capacity Required, TEU	0
Total Capacity Required, Containers	0

Estimated Yard Equipment Required	
RTG's	21
Top Picks	6
Side Picks (Empty Handlers)	3
Straddle Carriers	0

Model Data (User Input)

Throughput Distribution

Imports	10.0%
Exports	10.0%
Empties	10.0%
Transhipment	70.0%
Intermodal Imports	0.0%
Intermodal Exports	0.0%
	100.0%

Average Dwell Time (days)

Imports	7
Exports	5
Empties	22
Transhipment	5
Intermodal Imports	2
Intermodal Exports	5

Storage Densities

Wheeled (TEU/ha) (Calculated)	147.89

Grounded (TEU/acre) (Input, See Look-Up Table @ Sheet 2)

RTG (TEU/Hectare)	916
Top Pick (TEU/Hectare)	889
Strad 2H (TEU/Hectare)	435
Side Pick (TEU/Hectare)	1482

CENTRO DE RECURSOS TECNICOS
AUTORIDAD DEL CANAL DE PANAMA

Storage Modes Distribution

Imports	
Wheeled	0.0%
RTG	0.0%
Top Pick	100.0%
Strad	0.0%
	100.0%
Exports	
Wheeled	0.0%
RTG	0.0%
Top Pick	100.0%
Strad	0.0%
	100.0%
Empties	
Wheeled	0.0%
RTG	0.0%
Side Pick	100.0%
Strad	0.0%
	100.0%
Transhipment	
Wheeled	0.0%
RTG	100.0%
Top Pick	0.0%
Strad	0.0%
	100.0%
Intermodal Imports	
Wheeled	0.0%
RTG	100.0%
Top Pick	0.0%
Strad	0.0%
	100.0%
Intermodal Exports	
Wheeled	0.0%
RTG	100.0%
Top Pick	0.0%
Strad	0.0%
	100.0%

Model Factors

Vessel Peaking Factor	87.0%
C. Y. Shape Factor	90.0%
Grounded Storage Sorting Factor	85.0%
Seasonal Peaking Factor	89.0%
Storage Conversion Factor (TEU/box)	1.40

Model Results

Factored Storage Densities

Wheeled (TEU/Ha)	103
Grounded RTG (TEU/Ha)	543
Grounded Top Pick (TEU/Ha)	527
Grounded Strad (TEU/Ha)	258
Grounded Side Pick (TEU/Ha)	878
Average Factored Storage Den. (TEU/Ha)	193
Average Dwell Time (days)	3.4

Annual Throughput By Mode (lifts)

Imports		
Wheeled		-
RTG		-
Top Pick		67,500
Strad		-
Exports		
Wheeled		-
RTG		-
Top Pick		67,500
Strad		-
Empties		
Wheeled		-
RTG		-
Side Pick		67,500
Strad		-
Transhipment		
Wheeled		-
RTG		472,500
Top Pick		-
Strad		-
Intermodal Import		
Wheeled		-
RTG		-
Top Pick		-
Strad		-
Intermodal Export		
Wheeled		-
RTG		-
Top Pick		-
Strad		-
Total	675,000	

Net CY Area Allocation (Ha)

Imports	
Wheeled	0.0
RTG	0.0
Top Pick	3.4
Strad	0.0
Exports	
Wheeled	0.0
RTG	0.0
Top Pick	2.5
Strad	0.0
Empties	
Wheeled	0.0
RTG	0.0
Side Pick	6.5
Strad	0.0
Transhipment	
Wheeled	0.0
RTG	16.7
Top Pick	0.0
Strad	0.0
Intermodal Import	
Wheeled	0.0
RTG	0.0
Top Pick	0.0
Strad	0.0
Intermodal Export	
Wheeled	0.0
RTG	0.0
Top Pick	0.0
Strad	0.0
Total	29.1
Berth Length (m)	850.0

Yard Depth (m)	342

Static Capacity Required (TEU)

Imports	
Wheeled	0
RTG	0
Top Pick	3,060
Strad	0
Exports	
Wheeled	0
RTG	0
Top Pick	2,185
Strad	0
Empties	
Wheeled	0
RTG	0
Side Pick	9,616
Strad	0
Transhipment	
Wheeled	0
RTG	15,298
Top Pick	0
Strad	0
Intermodal Import	
Wheeled	0
RTG	0
Top Pick	0
Strad	0
Intermodal Export	
Wheeled	0
RTG	0
Top Pick	0
Strad	0
Totals	
Imports	3,060
Exports	2,185
Empties	9,616
Transhipment Import	15,298
Intermodal Import	0
Intermodal Export	0
Total Wheeled TEU	0
Total Grounded TEU	30,159
TOTAL REQUIRED CAPACITY, TEU	30,159

Static Capacity Required (Containers)

Imports	
Wheeled	0
RTG	0
Top Pick	2,185
Strad	0
Exports	
Wheeled	0
RTG	0
Top Pick	925
Strad	0
Empties	
Wheeled	0
RTG	0
Side Pick	4,068
Strad	0
Transhipment Import	
Wheeled	0
RTG	10,927
Top Pick	0
Strad	0
Intermodal Import	
Wheeled	0
RTG	0
Top Pick	0
Strad	0
Intermodal Export	
Wheeled	0
RTG	0
Top Pick	0
Strad	0
Totals	
Imports	2,185
Exports	925
Empties	4,068
Transhipment Import	10,927
Intermodal Import	0
Intermodal Export	0
Total Wheeled Container Slots	0
Total Grounded Container Slots	18,106
TOTAL REQ. CAPACITY, CONTAINERS	18,106

C CROSS SECTION OF CONTAINER BERTH

For cost estimating purposes, the consultant prepared a preliminary concept for the berth structure that forms the basis of the Container Terminal module. The suggested design involves the construction of an open piled platform with a cast in place or precast decking system.

A typical cross section of the berth is presented on the following page.

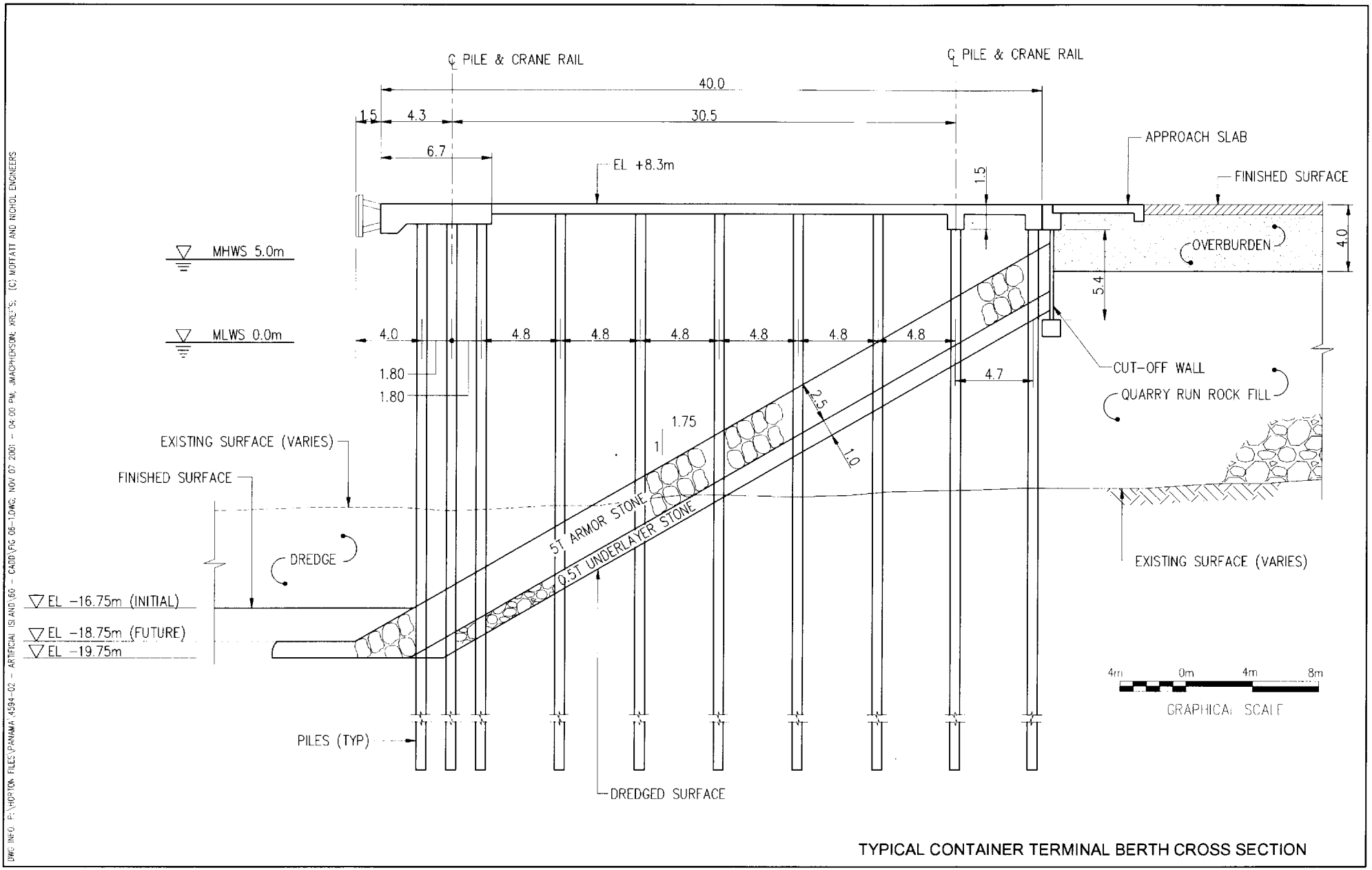

TYPICAL CONTAINER TERMINAL BERTH CROSS SECTION

DWG INFO: P:\HORTON FILES\PANAMA 4594-02 - ARTIFICIAL ISLAND\60 - CADD\FIG 06-1.DWG, NOV 07 2001 - 04:00 PM, JMACPHERSON, XREFS: (C) MOFFATT AND NICHOL ENGINEERS

D Transportation Cost Models & Computations

A number of transportation and cost models were developed to support the cost estimates presented in the main report. These include production and costing models for the truck haul, rail and conveyor systems.

The attached computation sheets provide detailed information on the model parameters and assumptions used for this preliminary analysis.

This appendix also includes the work sheets used to derive the infrastructure, container terminal and ACP disposal cost estimates presented and discussed in the main report.

Included in this Appendix are the following computation work sheets:

1. Truck Haul Operation and Cost Model
2. Conveyor/Truck Model and Costs
3. Island Cost using Rail Transportation System (includes rail model and costs) – P1 and P2 Locks Alignments - Full Breakwater Alternatives
4. Island Cost using Rail Transportation System (includes rail model and costs) – P1 and P2 Locks Alignments - Short Breakwater Alternatives
5. Infrastructure Costs Phases 1, 2 and 3 – P1 and P2 Locks Alternatives
6. Container Terminal Module – Cost Estimate
7. Truck Haul Model and Cost Estimate – ACP designated Disposal sites

D1 - Truck Haul Operation and Cost Model

PRELIMINARY COST ESTIMATE	DATE PREPARED 2-Nov-01
CLIENT AUTORIDAD DEL CANAL DE PANAMA	CONSTRUCTION CONTRACT NO.
	ESTIMATED BY MOFFATT & NICHOL ENGINEERS
PROJECT TITLE PRE-FEASIBILITY STUDY FOR ARTIFICIAL ISLAND DEVELOPMENT MATERIAL TRANSPORTATION BY TRUCK TO ISLAND (Directly-Related Haulage Costs Only)	STATUS OF DESIGN Conceptual

Item	Quantity	Units	Unit Cost	Total
Costs Using Material Quantities from Channel Alignment P1				
General				
Mobilization and Demobilization	1	LS	$2,500,000.00	$2,500,000
Truck Haulage				
Equipment Cost	87,381,000	m^3	$12.27	$1,071,869,676
Haul Roads				
Construction and Maintenance	87,381,000	m^3	$0.05	$4,697,025
Grand Total Cost - Haulage P1-A				***$1,079,066,701***
Costs Using Material Quantities from Channel Alignment P2				
General				
Mobilization and Demobilization	1	LS	$2,500,000.00	$2,500,000
Truck Haulage				
Equipment Cost	47,136,500	m^3	$12.27	$578,205,617
Haul Roads				
Construction and Maintenance	47,136,500	m^3	$0.10	$4,487,025
Grand Total Cost - Haulage P2-A				***$585,192,642***

Panama - Artificial Island Pre-feasibility Study
PRELIMINARY COST ESTIMATE OF TRUCK OPERATION FOR CHANNEL ALIGNMENT P1

MATERIAL HAULAGE - TRUCKING

General Specifications

Item	Unit	Qty	Price/Rate			Comments
Quantities						
Total Bulked Rock Volume to be Hauled	m^3	69,350,000				
Overburden to be Hauled	m^3	18,031,000				
Total Material to be Transported	m^3	87,381,000				
Site/Work Specifications						
Haulage distance (channel to island)	km	22				
Train & Shovel Operating Hours Per Day	hr	18.00				
Working Hours Per Day (Earthworking @ island)	hr	18.00				
Daily Production Target (Trucking)	m^3	23,000				production_target_island
Equipment						
CAT 789 Off-Road Truck						
Truck Capacity	m^3	105				
Estimated Unload Time	min	3.0				
Estimated Unload Time	hr	0.05				
Estimated Load Time	hr	0.088				5.25 minutes
Estimated Travel Time	hr	2.20				Assumes round-trip distance of 44 km
Total Cycle Time	***hr***	***2.34***				
Max. Trips Per Day per Truck in 18 hours	no.	7.7				
Daily Haul Per Truck	m^3	809				
Estimated Trucks Required for 23000 m3 per day	**no.**	**29**				
Truck Trips per Day	no.	223				19.53875 hours to load all trucks
Daily Haul for 29 trucks	m^3	23,447				
Hourly Rate per truck	$/hr		$331.45			Based on Harza Estimate. Incl. Maint, O/H, Taxes, Bonds and Profit
Daily Rate per truck	$/day		$7,954.70			
Daily Rate for 29 trucks	$/day		$230,686.42			
Time to haul 87381000 m3	**day**	**3,727**				**10.9 Years**
Truck Loading Using CAT 5230						
Bucket Capacity	m^3	17				
Bucket Fill Factor	no.	0.90				
Actual Bucket Capacity	m^3	15.3				
Bucket Cycle Time	min	0.765				
Bucket Cycle Time	hr	0.013				45.9 seconds per bucket load
Loading Rate Per Front Shovel / Hour	m3/hr	1,200				Based on Harza estimate
Loading Rate Per Front Shovel / Day	m3/day	21,600				Based on Harza estimate
Shovels Estimated for Truck Loading	no.	4				
Hourly Rate per Shovel	$/hr		$592.95			Based on Harza Estimate. Incl. Maint, O/H, Taxes, Bonds and Profit
Daily Rate per Shovel	$day		$14,230.73			
Daily Rate for 4 shovels	$day		$56,922.93			
CAT D-9 Bulldozer						
Estimated no. required	no.	1				
Hourly Rate	$/hr		$213.99			Based on Harza Estimate. Incl. Maint, O/H, Taxes, Bonds and Profit
Daily Rate	$/day		$5,135.84			
CAT 16H Grader						
Estimated no. required	no.	1				
Hourly Rate	$/hr		$101.20			Based on Harza Estimate. Incl. Maint, O/H, Taxes, Bonds and Profit
Daily Rate	$/day		$2,428.86			
Haul Road Maintenance						
Annual Maintenance per km	year	10.9	$ 2,500.00	$	27,250.00	

Transportation Costs

Item	Unit	Qty	Price/Rate			Comments
Truck Loading/Transport						
4 Front Shovels	day	3,727	$56,922.93	$	212,141,797	
29 Trucks	day	3,727	$230,686.42	$	859,727,879	
Total Cost - Truck Transportation					**$1,071,869,676**	
Unit Cost of Transport per m^3					**$12.27**	
Haul Roads						
Construction	km	22	$200,000.00	$	4,400,000	
Maintenance	km	10.9	$27,250.00	$	297,025	
Total Cost - Truck Transportation					**$4,697,025**	
Unit Cost of Haul Road per m^3					**$0.05**	

CENTRO DE RECURSOS TECNICOS
AUTORIDAD DEL CANAL DE PANAMA

Panama Artificial Island Pre-Feasibility Study

Island Volume Calculations-Trucking Option, Channel Alignment P1

Item	Quantity	Unit	Comments
Material Excavated from New Channel			
Wet Clay	1,450,000	m^3	
Dry Clay	12,420,000	m^3	
Wet Rock	5,820,000	m^3	
Dry Rock	49,660,000	m^3	
Bulking Factors (final placement:in-situ)			
Wet Clay	1.3		Conservative
Dry Clay	1.3		Conservative
Wet Rock	1.25		Conservative
Dry Rock	1.25		Conservative
Bulked Excavation Volumes			
Wet Clay	1,885,000	m^3	
Dry Clay	16,146,000	m^3	
Total Overburden	***18,031,000***	***m^3***	
Wet Rock	7,275,000	m^3	
Dry Rock	62,075,000	m^3	
Total Rock (Gross)	***69,350,000***	***m^3***	

Panama - Artificial Island Pre-feasibility Study
PRELIMINARY COST ESTIMATE OF TRUCK OPERATION FOR CHANNEL ALIGNMENT P2 (Full Breakwater)

MATERIAL HAULAGE - TRUCKING

General Specifications

Item	Unit	Qty	Price/Rate			Comments
Quantities						
Total Bulked Rock Volume to be Hauled	m^3	37,412,500				
Overburden to be Hauled	m^3	9,724,000				
Total Material to be Transported	m^3	47,136,500				
Site/Work Specifications						
Haulage distance (channel to island)	km	22				
Train & Shovel Operating Hours Per Day	hr	18.00				
Working Hours Per Day (Earthworking @ island)	hr	18.00				
Daily Production Target (Trucking)	m^3	23,000				production_target_island
Equipment						
CAT 789 Off-Road Truck						
Truck Capacity	m^3	105				
Estimated Unload Time	min	3.0				
Estimated Unload Time	hr	0.05				
Estimated Load Time	hr	0.088				5.25 minutes
Estimated Travel Time	hr	2.20				Assumes round-trip distance of 44 km
Total Cycle Time	***hr***	***2.34***				
Max. Trips Per Day per Truck in 18 hours	no.	7.7				
Daily Haul Per Truck	m^3	809				
Estimated Trucks Required for 23000 m3 per day	**no.**	**29**				
Truck Trips per Day	no.	223				19.53875 hours to load all trucks
Daily Haul for 29 trucks	m^3	23,447				
Hourly Rate per truck	$/hr		$331.45			Based on Harza Estimate. Incl. Maint, O/H, Taxes, Bonds and Profit
Daily Rate per truck	$/day		$7,954.70			
Daily Rate for 29 trucks	$/day		$230,686.42			
Time to haul 47136500 m3	**day**	**2,010**				**5.9 Years**
Truck Loading Using CAT 5230						
Bucket Capacity	m^3	17				
Bucket Fill Factor	no.	0.90				
Actual Bucket Capacity	m^3	15.3				
Bucket Cycle Time	min	0.765				
Bucket Cycle Time	hr	0.013				45.9 seconds per bucket load
Loading Rate Per Front Shovel / Hour	m3/hr	1,200				Based on Harza estimate
Loading Rate Per Front Shovel / Day	m3/day	21,600				Based on Harza estimate
Shovels Estimated for Truck Loading	no.	4				
Hourly Rate per Shovel	$/hr		$592.95			Based on Harza Estimate. Incl. Maint, O/H, Taxes, Bonds and Profit
Daily Rate per Shovel	$day		$14,230.73			
Daily Rate for 4 shovels	$day		$56,922.93			
CAT D-9 Bulldozer						
Estimated no. required	no.	1				
Hourly Rate	$/hr		$213.99			Based on Harza Estimate. Incl. Maint, O/H, Taxes, Bonds and Profit
Daily Rate	$/day		$5,135.84			
CAT 16H Grader						
Estimated no. required	no.	1				
Hourly Rate	$/hr		$101.20			Based on Harza Estimate. Incl. Maint, O/H, Taxes, Bonds and Profit
Daily Rate	$/day		$2,428.86			
Haul Road Maintenance						
Annual Maintenance per km	year	5.9	$ 2,500.00	$	14,750.00	

Transportation Costs

Item	Unit	Qty	Price/Rate			Comments
Truck Loading/Transport						
4 Front Shovels	day	2,010	$56,922.93	$	114,437,027	
29 Trucks	day	2,010	$230,686.42	$	463,768,590	
Total Cost - Truck Transportation					**$578,205,617**	
Unit Cost of Transport per m^3					**$12.27**	
Haul Roads						
Construction	km	22	$200,000.00	$	4,400,000	
Maintenance	km	5.9	$14,750.00	$	87,025	
Total Cost - Truck Transportation					**$4,487,025**	
Unit Cost of Haul Road per m^3					**$0.10**	

Panama Artificial Island Pre-Feasibility Study

Island Volume Calculations-Trucking Option, Channel Alignment P2

Item	Quantity	Unit	Comments
Material Excavated from New Channel			
Wet Clay	2,050,000	m^3	
Dry Clay	5,430,000	m^3	
Wet Rock	8,200,000	m^3	
Dry Rock	21,730,000	m^3	
Bulking Factors (final placement:in-situ)			
Wet Clay	1.3		Conservative
Dry Clay	1.3		Conservative
Wet Rock	1.25		Conservative
Dry Rock	1.25		Conservative
Bulked Excavation Volumes			
Wet Clay	2,665,000	m^3	
Dry Clay	7,059,000	m^3	
Total Overburden	***9,724,000***	***m^3***	
Wet Rock	10,250,000	m^3	
Dry Rock	27,162,500	m^3	
Total Rock (Gross)	***37,412,500***	***m^3***	

Panama Artificial Island Pre-Feasibility Study
Trucking Operation, Channel Alignments P1 and P2

Table of Standard Input Values

Item	Unit	Total	Comments
Equipment Specifications			
CAT 789 Off-Road Truck (105m^3 Capacity)			
Hourly Rate	$/hr	$ 331.45	
Load Capacity	m3	105.00	
Average Speed	km/h	20	
CAT 5230 Front Shovel (17m^3 bucket)			
Hourly Rate	$/hr	$ 592.95	
Single Bucket Capacity	m3	17.00	
Hourly Dig/Load Production Rate	m3/hr	1,200.00	
CAT D-9 Bulldozer			
Hourly Rate	$/hr	$ 213.99	
Hourly Production	m3	750	
CAT 16H Grader			
Hourly Rate	$/hr	$ 101.20	
General			
Pay Hours	hr	24	
Daily Working Hours (Factored @ 75%)	hr	18.00	
Haul Statistics			
Average One-way Haul Distance	km	22	
Daily Production Target (trucking)	m3	23000	Applies to island earthworking also

D2 - Conveyor/Truck Model and Costs

PRELIMINARY COST ESTIMATE	DATE PREPARED 2-Nov-01
CLIENT AUTORIDAD DEL CANAL DE PANAMA	CONSTRUCTION CONTRACT NO.
	ESTIMATED BY MOFFATT & NICHOL ENGINEERS
PROJECT TITLE PRE-FEASIBILITY STUDY FOR ARTIFICIAL ISLAND DEVELOPMENT MATERIAL TRANSPORTATION BY CONVEYOR & TRUCK (Directly-Related Haulage Costs Only)	STATUS OF DESIGN Conceptual

Item	Quantity	Units	Unit Cost	Total
Costs Using Material Quantities from Channel Alignment P1				
General				
Mobilization and Demobilization	1	LS	$2,500,000.00	$2,500,000
Truck Haulage				
Equipment and Haulage Roads	34,675,000	m^3	$10.77	$373,617,565
Conveyor Haulage				
Equipment and Maintenance	50,206,000	m^3	$2.86	$143,363,072
Grand Total Cost - Haulage P1-A				**$519,480,637**
Costs Using Material Quantities from Channel Alignment P2				
General				
Mobilization and Demobilization	1	LS	$2,500,000.00	$2,500,000
Truck Haulage				
Equipment and Haulage Roads	18,706,250	m^3	$10.88	$203,584,535
Conveyor Haulage				
Equipment and Maintenance	25,930,250	m^3	$4.65	$120,505,553
Grand Total Cost - Haulage P2-A				**$326,590,088**

Panama - Artificial Island Pre-feasibility Study
PRELIMINARY COST ESTIMATE OF CONVEYOR/TRUCK OPERATION FOR CHANNEL ALIGNMENT P1

MATERIAL HAULAGE - CONVEYOR SYSTEM

General Specifications

Item	Unit	Qty	Price/Rate		Comments
Quantities					
Total Bulked Rock Volume to be Hauled	m^3	69,350,000			
Percentage Rock Unsuitable for Conveyor	no.	50%			Includes select armor stone
Rock Unsuitable for Conveyor	m^3	34,675,000			
Total Rock Volume Hauled by Truck	m^3	34,675,000			
Overburden to be Hauled by Conveyor	m^3	15,531,000			
Rock Hauled by Conveyor	m^3	34,675,000			Excludes overburden used for conveyor formation fill (arbitrary)
Bulked Material Transported by Conveyor	m^3	50,206,000			
Total Material to be Transported	m^3	84,881,000			Excludes 2500000 m3 of overburden for formation preparation
Site/Work Specifications					
Haulage distance (channel to island)	km	22			
Estimated Conv. Haulage Time	days	661			2 Years
Train & Shovel Operating Hours Per Day	hr	18.00			
Working Hours Per Day (Earthworking @ island)	hr	18.00			
Daily Production Target (Conveyor)	m^3	60,000			production_target_island
Daily Production Target (Trucking)	m^3	17,000			production_target_island
Equipment Specifications					
Conveyor Handling					
Conveyor Formation Length	m	17,500			
Belt Width	m	1.60			
Belt Speed	m/s	4.00			
Belt Capacity - Hourly	m3/hour	5,280			3300 tph capacity
Belt Capacity - Daily	m3/day	95,040			
Daily Haulage @ 80% efficiency	m^3	76,032			
Special Material Handling (Large Rock)					
CAT 789 Off-Road Truck					
Truck Capacity	m^3	105			
Estimated Unload Time	min	3.0			
Estimated Unload Time	hr	0.05			
Estimated Load Time	hr	0.088			
Estimated Travel Time	hr	2.20			Assumes round-trip distance of 44 km
Total Cycle Time	***hr***	***2.34***			
Max. Trips Per Day per Truck in 18 hours	no.	7.7			
Daily Haul Per Truck	m^3	809			
Estimated Trucks for 17000 m3 per day	no.	22			
Daily Haul for 22 trucks	m^3	17,787			
Time to haul 34675000 m3	day	1,949			5.7 Years
Hourly Rate per truck	$/hr		$331.45		Based on Harza Estimate. Incl. Maint, O/H, Taxes, Bonds and Profit
Daily Rate per truck	$/day		$7,954.70		
Daily Rate for 22 trucks	$/day		$175,003.49		
Belt/Truck Loading Using CAT 5230					
Bucket Capacity	m^3	17			
Bucket Fill Factor	no.	0.90			
Actual Bucket Capacity	m^3	15.3			
Bucket Cycle Time	min	0.765			
Bucket Cycle Time	hr	0.013			45.9 seconds per bucket load
Loading Rate Per Front Shovel / Hour	m3/hr	1,200			Based on Harza estimate
Loading Rate Per Front Shovel / Day	m3/day	21,600			Based on Harza estimate
Shovels Estimated for Belt Loading	no.	4			
Shovels Estimated for Truck Loading	no.	1			
Total Shovels Required	no.	5			
Hourly Rate per Shovel	$/hr		$592.95		Based on Harza Estimate. Incl. Maint, O/H, Taxes, Bonds and Profit
Daily Rate per Shovel	$day		$14,230.73		
Daily Rate for 5 shovels	$day		$71,153.66		
Haul Road Maintenance					
Annual Maintenance per km	year	5.7	$ 2,500.00	$ 14,250.00	

Transportation Costs

Item	Unit	Qty	Price/Rate		Comments
Truck Loading/Transport					
Haulage Roads-Construction	km	22	$ 200,000.00	$ 4,400,000	
Haulage Roads-Maintenance	km	22	$ 14,250.00	$ 313,500	
Front Shovels	day	1,949	$14,230.73	$ 27,742,208	
22 Trucks	day	1,949	$175,003.49	$ 341,161,857	
Total Cost - Truck Transportation				**$373,617,565**	
Unit Cost of Transport per m^3				**$10.77**	
Conveyor System/Loading Equipment					
Front Shovels	day	661	$ 71,153.66	$ 47,032,572	
Formation preparation	m3	2,500,000	$ 1.10	$ 2,750,000	
Transfer Station	no.	10	$ 200,000.00	$ 2,000,000	rate from Propuerto study x factor of 2
Mobile Hopper	no.	5	$ 500,000.00	$ 2,500,000	estimated
Conveyor @ Grade (Work Face)	m	9,000	$ 2,500.00	$ 22,500,000	Unit cost from SOROS - 60" belt
Conveyor @ Grade (Main route)	m	23,500	$ 2,500.00	$ 58,750,000	Unit cost from SOROS - 60" belt
Stacker	LS	1	$ 3,500,000.00	$ 3,500,000	rate from Propuerto study
Electrical System	LS	1	$ 4,000,000.00	$ 4,000,000	
Operation and Maintenance	LS	661	$ 500.00	$ 330,500	
Total Cost - Conveyor Transportation				**$143,363,072**	
Unit Cost of Transport per m^3				**$2.86**	

Panama Artificial Island Pre-Feasibility Study

Island Volume Calculations-Conveyor/Truck Option, Channel Alignment P1

Item	Quantity	Unit	Comments
Material Excavated from New Channel			
Wet Overburden	1,450,000	m^3	
Dry Overburden	12,420,000	m^3	
Wet Rock	5,820,000	m^3	
Dry Rock	49,660,000	m^3	
Bulking Factors (final placement:in-situ)			
Wet Overburden	1.3		Conservative
Dry Overburden	1.3		Conservative
Wet Rock	1.25		Conservative
Dry Rock	1.25		Conservative
Bulked Excavation Volumes			
Wet Overburden	1,885,000	m^3	
Dry Overburden	16,146,000	m^3	
Total Overburden	***18,031,000***	***m^3***	
Wet Rock	7,275,000	m^3	
Dry Rock	62,075,000	m^3	
Total Rock (Gross)	***69,350,000***	***m^3***	

PRELIMINARY COST ESTIMATE OF CONVEYOR/TRUCK OPERATION FOR CHANNEL ALIGNMENT P1

MATERIAL HAULAGE - CONVEYOR SYSTEM

General Specifications

Item	Unit	Qty	Price/Rate			Comments
Quantities						
Total Bulked Rock Volume to be Hauled	m^3	37,412,500				
Percentage Rock Unsuitable for Conveyor	no.	50%				
Rock Unsuitable for Conveyor by Truck	m^3	18,706,250				
Total Rock Volume Hauled by Truck	**m^3**	**18,706,250**				
Overburden to be Hauled by Conveyor	m^3	7,224,000				Excludes m3 of overburden for formation preparation
Rock Hauled by Conveyor	m^3	18,706,250				
Bulked Material Transported by Conveyor	**m^3**	**25,930,250**				
Site/Work Specifications						
Haulage distance (channel to island)	km	22				
Estimated Conv. Haulage Time	days	342				1 Years
Train & Shovel Operating Hours Per Day	hr	18.00				
Working Hours Per Day (Earthworking @ island)	hr	18.00				
Daily Production Target (Conveyor)	m^3	60,000				production_target_island
Daily Production Target (Trucking)	m^3	17,000				production_target_island
Equipment Specifications						
Conveyor Handling						
Conveyor Formation Length	m	17,500				
Belt Width	m	1.60				
Belt Speed	m/s	4.00				
Belt Capacity - Hourly	m3/hour	5,280				3300 tph capacity
Belt Capacity - Daily	m3/day	95,040				
Daily Haulage @ 80% efficiency	m^3	76,032				
Special Material Handling (Large Rock)						
CAT 789 Off-Road Truck						
Truck Capacity	m^3	105				
Estimated Unload Time	min	3.0				
Estimated Unload Time	hr	0.05				
Estimated Load Time	hr	0.088				
Estimated Travel Time	hr	2.20				Assumes round-trip distance of 44 km
Total Cycle Time	***hr***	***2.34***				
Max. Trips Per Day per Truck in 18 hours	no.	7.7				
Daily Haul Per Truck	m^3	809				
Estimated Trucks for 17000 m3 per day	no.	22				
Daily Haul for 22 trucks	m^3	17,787				
Time to haul 18706250 m3	day	1,052				3.1 Years
Hourly Rate per truck	$/hr		$331.45			Based on Harza Estimate. Incl. Maint, O/H, Taxes, Bonds and Profit
Daily Rate per truck	$/day		$7,954.70			
Daily Rate for 22 trucks	$/day		$175,003.49			
Belt/Truck Loading Using CAT 5230						
Bucket Capacity	m^3	17				
Bucket Fill Factor	no.	0.90				
Actual Bucket Capacity	m^3	15.3				
Bucket Cycle Time	min	0.765				
Bucket Cycle Time	hr	0.013				45.9 seconds per bucket load
Loading Rate Per Front Shovel / Hour	m3/hr	1,200				Based on Harza estimate
Loading Rate Per Front Shovel / Day	m3/day	21,600				Based on Harza estimate
Shovels Estimated for Belt Loading	no.	4				
Shovels Estimated for Truck Loading	no.	1				
Total Shovels Required	**no.**	**5**				
Hourly Rate per Shovel	$/hr		$592.95			Based on Harza Estimate. Incl. Maint, O/H, Taxes, Bonds and Profit
Daily Rate per Shovel	$day		$14,230.73			
Daily Rate for 5 shovels	$day		$71,153.66			
Haul Road Maintenance						
Annual Maintenance per km	year	3.1	$ 2,500.00	$	7,750.00	

Transportation Costs

Item	Unit	Qty	Price/Rate			Comments
Truck Loading/Transport						
Haulage Roads-Construction	km	22	$ 200,000.00	$	4,400,000	
Haulage Roads-Maintenance	km	22	$ 7,750.00	$	170,500	
Front Shovels	day	1,052	$14,230.73	$	14,966,191	
22 Trucks	day	1,052	$175,003.49	$	184,047,844	
Total Cost - Truck Transportation					**$203,584,535**	
Unit Cost of Transport per m^3					**$10.88**	
Conveyor System/Loading Equipment						
Front Shovels	day	342	$ 71,153.66	$	24,334,553	
Formation preparation	m3	2,500,000	$ 1.10	$	2,750,000	
Transfer Station	no.	10	$ 200,000.00	$	2,000,000	rate from Propuerto study x factor of 2
Mobile Hopper	no.	5	$ 500,000.00	$	2,500,000	guess
Conveyor @ Grade (Work Face)	m	9,000	$ 2,500.00	$	22,500,000	Unit cost from SOROS (c/- Alvaro) - 60" belt
Conveyor @ Grade (Main route)	m	23,500	$ 2,500.00	$	58,750,000	Unit cost from SOROS (c/- Alvaro) - 60" belt
Stacker	LS	1	$ 3,500,000.00	$	3,500,000	rate from Propuerto study
Electrical System	LS	1	$ 4,000,000.00	$	4,000,000	
Operation and Maintenance	LS	342	$ 500.00	$	171,000	
Total Cost - Conveyor Transportation					**$120,505,553**	
Unit Cost of Transport per m^3					**$4.65**	

Panama Artificial Island Pre-Feasibility Study

Island Volume Calculations-Channel Alignment P2

Item	Quantity	Unit	Comments
Material Excavated from New Channel			
Wet Overburden	2,050,000	m^3	
Dry Overburden	5,430,000	m^3	
Wet Rock	8,200,000	m^3	
Dry Rock	21,730,000	m^3	
Bulking Factors (final placement:in-situ)			
Wet Overburden	1.3		Conservative
Dry Overburden	1.3		Conservative
Wet Rock	1.25		Conservative
Dry Rock	1.25		Conservative
Bulked Excavation Volumes			
Wet Overburden	2,665,000	m^3	
Dry Overburden	7,059,000	m^3	
Total Overburden	***9,724,000***	***m^3***	
Wet Rock	10,250,000	m^3	
Dry Rock	27,162,500	m^3	
Total Rock (Gross)	***37,412,500***	***m^3***	

Panama Artificial Island Pre-Feasibility Study
Conveyor/Truck Option, Channel Alignments P1 and P2

Table of Standard Input Values

Item	Unit	Total	Comments
Equipment Specifications			
CAT 789 Off-Road Truck (105m^3 Capacity)			
Hourly Rate	$/hr	$ 331.45	
Load Capacity	m3	105.00	
Average Speed	km/h	20	
CAT 5230 Front Shovel (17m^3 bucket)			
Hourly Rate	$/hr	$ 592.95	
Single Bucket Capacity	m3	17.00	
Hourly Dig/Load Production Rate	m3/hr	1,200.00	
CAT D-9 Bulldozer			
Hourly Rate	$/hr	$ 213.99	
Hourly Production	m3	750	
CAT 16H Grader			
Hourly Rate	$/hr	$ 101.20	
General			
Pay Hours	hr	24	
Daily Working Hours (Factored @ 75%)	hr	18.00	
Haul Statistics			
Average One-way Truck Haul Distance	km	22	
Conveyor Length	m	23500	
Conveyor Formation Length	m	17500	
Daily Production Target (conveyor)	m3	60000	Applies to island earthworking also
Daily Production Target (trucking)	m3	17000	Applies to island earthworking also

UNAUTHORIZED USE OR DUPLICATION IS PROHIBITED
PROHIBIDA LA REPRODUCCION SIN AUTORIZACION
DEL AUTOR

CENTRO DE RECURSOS TECNICOS
AUTORIDAD DEL CANAL DE PANAMA

D3 - Island Cost using Rail Transportation System (includes rail model and costs) – P1 and P2 Locks Alignments - Full Breakwater Alternatives

PRELIMINARY COST ESTIMATE				DATE PREPARED 8-Nov-01
CLIENT AUTORIDAD DEL CANAL DE PANAMA		CONTRACT NO.		
		ESTIMATED BY MOFFATT & NICHOL ENGINEERS		
PROJECT TITLE PRE-FEASIBILITY STUDY FOR ARTIFICIAL ISLAND DEVELOPMENT TRANSPORTATION BY RAIL		STATUS OF DESIGN Conceptual		
Item	**Quantity**	**Units**	**Unit Cost**	**Total**
Construction Costs Using Material Quantities from Channel Alignment P1				
Alternative P1-A, Full-length Breakwater				
General				
Mobilization and Demobilization	1	LS	$2,500,000.00	$2,500,000
Material Haulage				
New Railway on Formation	34.9	km	$813,600.00	$28,394,640
New Railway on Trestle	0.4	km	$413,700.00	$165,480
New Railway on Causeway/Island	12.1	km	$415,500.00	$5,044,170
Railway Structures	1.0	LS	$5,172,405.06	$5,172,405
Material Transportation	87,381,000	m^3	$2.48	$216,295,862
Island Construction				
Trestle	8,020	m^2	$1,350.00	$10,827,000
Causeway	6,214,942	m^3	$8.34	$51,842,020
Causeway Bridge	2,005	m^2	$1,500.00	$3,007,500
Island Fill	75,122,158	m^3	$0.39	$29,633,300
Island Revetment Construction	960,900	m^3	$15.00	$14,413,499
Offshore Breakwater	5,083,000	m^3	$12.96	$65,858,000
Rock Crushing/Sorting Plant	1	LS	$1,000,000.00	$1,000,000
Total Cost - Island Construction				***$434,153,876***
Engineering and Construction Administration			4.00%	$17,366,155
Contingencies			20.00%	$90,304,006
Grand Total Cost				***$541,824,037***
Cost per sq. metre for Island Construction				***$155***

Item	**Quantity**	**Units**	**Unit Cost**	**Total**
Construction Costs Using Material Quantities from Channel Alignment P2				
Alternative P2-A, Full-length Breakwater				
General				
Mobilization and Demobilization (6%)	1	LS	$2,500,000.00	$2,500,000
Material Haulage				
New Railway on Formation	34.9	km	$813,600.00	$28,394,640
New Railway on Trestle	0.4	km	$413,700.00	$165,480
New Railway on Causeway/Island	11.2	km	$415,500.00	$4,632,825
Railway Structures	1.0	LS	$5,172,405.06	$5,172,405
Material Transportation	43,532,500	m^3	$2.38	$103,511,280
Civil Works				
Trestle	8,020	m^2	$1,350.00	$10,827,000
Causeway	6,745,910	m^3	$7.71	$52,004,760
Causeway Bridge	2,005	m^2	$1,500.00	$3,007,500
Island Fill	30,754,162	m^3	$0.42	$12,785,979
Island Revetment Construction	619,167	m^3	$15.00	$9,287,508
Offshore Breakwater	3,673,240	m^3	$13.07	$48,024,600
Rock Crushing/Sorting Plant	1	LS	$1,000,000.00	$1,000,000
Sub Total - Island Construction				***$281,313,977***
Engineering and Construction Administration			4.00%	$11,252,559
Contingencies			20.00%	$58,513,307
Grand Total Cost				***$351,079,843***
Cost per sq. metre for Island Construction				***$204***

Panama - Artificial Island Pre-feasibility Study
PRELIMINARY COST ESTIMATE FOR CHANNEL ALIGNMENT P1-A (Full Breakwater)

Note: Rates throughout are taken from RS Means, "get-a-quote.net", previous project data or from recent research

RAILWAY CONSTRUCTION

Track Specifications

Item	Unit	Qty	Price/Rate	Total	Comments
On Formation					
Track section length	m	17,450			Includes distance from north end of channel to shoreline
No. tracks	ea	2			Double track
Total track length	m	34,900			
Total no. ties	ea	58,167			
Ballast volume	m^3	123,197			
Ballast mass @ 1.8 t/m^3	t	221,755			
On Trestle					
Track section length	m	200			
No. tracks	ea	2			
Total track length	m	400			
Total no. ties	ea	667			
Ballast volume	m^3	668			
Ballast mass @ 1.8 t/m^3	t	1,202			
On Causeway/Island					
Track section length	m	6,070			
No. tracks	ea	2			
Total track length	m	12,140			
Total no. ties	ea	20,233			
Ballast volume	m^3	20,274			track length x 6m wide x 0.6m deep, less total tie volume
Ballast mass @ 1.8 t/m^3	t	36,493			

Railway Costs

Item	Unit	Qty	Price/Rate	Total	Comments
Track Laying on Formation					
Survey	Ha	349	$ 2,000.00	$ 698,000	200m Corridor to shoreline, guesstimate
Boreholes	ea	20	$ 2,400.00	$ 48,000	Assuming 20m deep @ $120 per metre ($35 per foot)
Clearing and Stripping	Ha	52.35	$ 14,820.00	$ 775,827	Assume $6000 per Acre
Formation/Roadbed Earthworks	m^3	7,540,000	$ 1.10	$ 8,284,038	Cut + Fill Volumes
Ballast	t	221,755	$ 34.00	$ 7,539,656	
Treated Wood Ties	ea	58,167	$ 58.00	$ 3,373,667	
Tie plates	ea	116,334	$ 8.60	$ 1,000,472	
132lb Rail	m	69,800	$ 62.34	$ 4,351,050	
Track spikes	ea	232,667	$ 6.26	$ 1,456,493	
Rail anchors	ea	116,333	$ 5.90	$ 686,367	Anchor pattern: 1 tie in 2
Turnout (#10)	ea	8	$ 22,500.00	$ 180,000	Add 50% to cost for #8 turnout
Total Cost - Track on Formation				$ 28,393,571	
Unit Cost per km				813,600	
Track Laying on Trestle					
Ballast	t	1,202	$ 34.00	$ 40,882	
Treated Wood Ties	ea	667	$ 58.00	$ 38,667	
Tie plates	ea	1,334	$ 8.60	$ 11,472	
132lb Rail	m	800	$ 62.34	$ 49,869	
Track spikes	ea	2,667	$ 6.26	$ 16,693	
Rail anchors	ea	1,333	$ 5.90	$ 7,867	Anchor pattern: 1 tie in 2
Total Cost - Track on Trestle				$ 165,449	
Unit Cost per km				413,700	
Track Laying on Causeway/Island					
Ballast	t	36,493	$ 34.00	$ 1,240,758	
Treated Wood Ties	ea	20,233	$ 58.00	$ 1,173,514	
Tie plates	ea	40,466	$ 8.60	$ 348,008	
132lb Rail	m	24,280	$ 62.34	$ 1,513,517	
Track spikes	ea	80,932	$ 6.26	$ 506,634	
Rail anchors	ea	40,466	$ 5.90	$ 238,749	Anchor pattern: 1 tie in 2
Turnout (#10)	ea	1	$ 22,500.00	$ 22,500	Add 50% to cost for #8 turnout
Total Cost - Track on Causeway/Island				$ 5,043,681	
Unit Cost per km				415,500	

Item	Unit	Qty	Price/Rate	Total	Comments
Railway Structures					
Bridge @ STA 9+000	ea	1	$ 3,500,000.00	$ 3,500,000	Rail bridge over Pan American Highway
Culverts					
Pipe (Class 5)	ea	64	$ 23,580.58	$ 1,509,157	Assume 30m long at each location using 4 x 1.8m (72") pipe
Headwall	ea	32	$ 4,703.60	$ 150,515	Assume 1.8m (72") dia pipe
Rail Crossings	ea	7	$ 1,819.00	$ 12,733	Assume 8m-wide roadway

Total Cost - Track Laying	**$ 33,602,701**
Total Cost - Railway Structures	**$ 5,172,405**
Total Cost - Railway Construction	**$ 38,775,106**

Panama - Artificial Island Pre-feasibility Study
PRELIMINARY COST ESTIMATE FOR CHANNEL ALIGNMENT P1-A (Full Breakwater)

MATERIAL HAULAGE

General Specifications

Item	Unit	Qty	Price/Rate		Comments
Quantities					
Total Bulked Rock to be Hauled	m3	69,350,000			
Total Bulked Overburden to be Hauled	m3	18,031,000			
Special Handling (Armor Stone)					
Causeway Armor	m^3	749,700			
Revetment Armor	m^3	960,900			
Breakwater Armor	m^3	1,502,800			
Armor Stone Hauled by Truck	m^3	**3,213,400**			Armor stone to be trucked to placement locations
Total Bulked Material to be Hauled by Rail	m^3	**84,167,600**			Excludes armor stone, which is hauled by truck
Site/Work Specifications					
Avg. rail haulage distance (channel to island)	km	23			
Train and Shovel Operating Hours per day	hr	20			
Working Hours Per Day (Earthworking)	hr	15			
Target Daily Production	m^3	48,000			Production rate estimate - input cell
Equipment Specifications					
Rail Transport Cycle					
Rail Car Capacity	m^3	40			
Rail Cars Per Train	no.	50			
Total Train Capacity	m^3	2,000			
Train Trips Required Per Day to Meet Target	no.	24			To meet target, requires 2 tracks at unloading site
Actual Material Hauled per Day	m^3	48,000			Target estimate - arbitrary
No. of 50-car Trains Sets Required	no.	6			
Trips Per Train Per Day	no.	4.30			
Estimated Time to Completion (Rail Haul)	***days***	***1,754***			5.1 Years
Average Train Speed	km/hr	20			
Dump time per rail car	min	1.20			
Minimum Travel Time (Round Trip)	hr	2.30			
Estimated Dump Time Per Train	hr	1.00			Based on no. rail cars x 1.2min per car
Time to Load a Train	hr	0.83			Calculation based on loading rate of 2 shovels per train
Train Movements/Delays per Train	hr	0.50			Conservative time estimate
No. simultaneous trains (loading/dumping)	no.	2.00			Indicates no. of trains needing to be unloaded or loaded simultaneously
Total trip cycle time	***hr***	***4.63***			
Total Rail Cars Required	no.	300			in order to meet daily haulage target
Daily Operations Cost for 6 Locos	$/day	$ 7,800			
Daily Maintenance Cost for 6 Locos	$/day	$ 5,400			
Daily Maintenance Cost for 300 Locos	$/day	$ 22,500			
Track Maintenance					
Annual maintenance cost	km	47.44	$ 25,000.00	$ 1,186,000	
Special Material Handling (Armor Stone)					
CAT 789 Off-Road Truck (200 ton Capacity)					
Truck Capacity	m^3	105			
Estimated Unload Time	min	3.0			
Estimated Unload Time	hr	0.05			
Estimated Load Time	hr	0.088			Truck capacity / Shovel Production
Estimated Travel Time	hr	2.300			Using round-trip distance of 46 km
Total Cycle Time	***hr***	***2.438***			
Trips per Truck per Day (assuming 20 working hou	no.	8.3			
Daily Haul Per Truck	m^3	872			
Estimated Number of Trucks Required	no.	2			Arbitrary input
Total Daily Haul	m^3	14,467			
No. Days to move material	**day**	**222**			Used to calculate equpment requirements
Hourly Cost per truck	$/hr		$331.45		Ref: Harza Estimate. Incl. Maint, O/H, Taxes, Bonds and Profit
Daily Cost per truck @ 24 pay hours per day	$/day		$7,954.70		
Daily Cost for 2 truck(s)	$/day		$15,909.41		
Shovels estimated for truck loading	**no.**	**1**			
Hourly Cost per Shovel	$/hr		$592.95		Ref: Harza Estimate. Incl. Maint, O/H, Taxes, Bonds and Profit
Daily Cost per shovel @ 24 pay hours per day	$day		$14,230.73		
Daily Cost for 1 truck(s)	$day		$14,230.73		
Train Loading (Using CAT 5230 Front Shovel)					
Bucket Capacity	m^3	17			Direct loading using front shovels
Bucket Fill Factor	no.	90%			Ref: Caterpillar web site
Actual Bucket Capacity	m^3	15.3			
Bucket Cycle Time	min	0.765			
Bucket Cycle Time	hr	0.013			
Hourly Loading Rate Per Front Shovel	m3/hr	1,200			45.9 seconds per bucket load cycle
Daily Loading Rate Per Front Shovel	m3/day	18,000			Ref: Harza Estimate
Shovels Estimated per Train	**no.**	**2**			
Total Shovels Required for Train Loading	**no.**	**4**			
Hourly Cost per Shovel	$/hr		$592.95		Ref: Harza Estimate. Incl. Maint, O/H, Taxes, Bonds and Profit
Daily Cost per Shovel (train loading 24 pay hours)	$day		$14,230.73		
Daily Cost for 4 shovels (train loading 24 pay hours)	$day		$56,922.93		

CENTRO DE RECURSOS TECNICOS
AUTORIDAD DEL CANAL DE PANAMA

Panama - Artificial Island Pre-feasibility Study
PRELIMINARY COST ESTIMATE FOR CHANNEL ALIGNMENT P1-A (Full Breakwater)

Haulage Costs

Item	Unit	Qty	Price/Rate		Comments
Rail Haulage Costs					
Front Shovels (train loading)	day	1,754	$56,922.93	$ 99,842,821	
Rail Transportation	tonne.km	3,290,953,164	$ 0.030	$ 98,728,595	** Cost comparison provided by 'Rollingstock Costs' below
Track Maintenance	year	5.08	$1,186,000.00	$ 6,029,693	
Truck Haulage Costs					
Front Shovels (Armor Stone Handling)	day	222	$14,230.73	$ 3,160,942	
Truck Transportation (Armor Stone Handling)	day	222	$15,909.41	$ 3,533,811	
Truck Haulage Roads	km	25	$200,000.00	$ 5,000,000	

Total Cost - Material Haulage	**$216,295,862**
Unit cost of transport per m^3	**$2.48**

Rollingstock Costs

Item	Unit	Qty	Price/Rate		Comments
Rollingstock Purchase Costs					
Locomotives	no.	7	$ 2,200,000	$ 15,400,000	Includes one backup loco
Side-dump rail cars	no.	310	$ 120,000	$ 37,200,000	Includes 10 backup rail cars. (Compressed air operated)
Operating/Maintenance Costs					
Operational cost of locomotives	day	1754	$ 7,800	$ 13,681,200	
Maintenance cost of locomotives	day	1754	$ 5,400	$ 9,471,600	
Maintenance cost of rail cars	day	1754	$ 22,500	$ 39,465,000	
Salvage Value					
Locomotives	no.	7	$ 660,000	$ (4,620,000)	
Side-dump rail cars	no.	310	$ 48,000	$ (14,880,000)	

Total Cost - Rollingstock	**$95,717,800**
Unit Cost per m^3 - Rollingstock only	**$1.10**

TRESTLE CONSTRUCTION

Trestle Specifications

Item	Unit	Qty	Price/Rate	Total	Comments
Length	m	200			
Width	m	40.1			
Surface Area	m^2	8,020			

Trestle Costs

Note: Rates throughout are taken from RS Means, "get-a-quote.net", previous project data or from recent research

Item	Unit	Qty	Price/Rate	Total	Comments
Trestle Structure					
Trestle in-place	m^2	8020	$ 1,350.00	$ 10,827,000	125 $/sf based on recent bid prices for similar structure

Total Cost - Trestle	**$10,827,000**
Unit cost of Trestle per m^2	**$1,350.00**

BRIDGE CONSTRUCTION

Bridge Costs

Item	Unit	Qty	Price/Rate	Total	Comments
Superstructure					
Length	m	50			
Width	m	40.1			
Total Cost - Superstructure	m^2	2005	$ 1,500.00	**$3,007,500**	
Approaches					
Total Cost - MSE Wall	m^2	30140	$ 484.00	**$14,587,760**	*Optional - not included in costs*
Note: Fill costs included in causeway cost calculations					

Panama - Artificial Island Pre-feasibility Study
PRELIMINARY COST ESTIMATE FOR CHANNEL ALIGNMENT P1-A (Full Breakwater)

CAUSEWAY CONSTRUCTION

Causeway Specifications

Item	Unit	Qty	Price/Rate	Total	Comments
Quantity Information					
Armor Volume	m^3	749,700			
Core Volume	m^3	5,465,242			
Rail Formation	m^3	3,333,450			Creation of rail formation at island for train unloading
Total Haul Volume	m^3	8,798,692			Armor volume excluded (costed separately)
Site/Work Specifications					
Round Trip Haul Distance	km	13.0			Refer Figures 8-3, 8-4
Average Truck Speed	km/h	20.0			
Working Hours Per Day	hr	20			Working hours @ 75% of pay hours
Pay Hours Per Day	hr	24			
Daily Production Rate	m^3	36,000			Arbitrary estimate to generate reasonable equipment requirements
Estimated Time to Completion	**days**	**250**			0.73 Years
Equipment Specifications					
CAT 789 Off-Road Truck					
Truck Capacity	m^3	105			Ref: Caterpillar web site
Estimated Unload Time	min	3.0			Arbitrary estimate
Estimated Unload Time	hr	0.05			
Estimated Load Time	hr	0.088			Truck capacity / Shovel Production
Estimated Travel Time	hr	0.650			
Total Cycle Time	hr	0.788			
Truck Trips Per Truck per Day	no.	25.3			
Daily Haul Per Truck	m^3	2,657			
Estimated Number of Trucks Required	**no.**	**14**			
Hourly Cost per truck	$/hr		$331.45		Ref: Harza Estimate. Incl. Maint, O/H, Taxes, Bonds and Profit
Daily Cost per truck @ 24 pay hours per day	$/day		$7,954.70		
Daily Cost for 25.3 trucks	$/day		$111,365.86		
Truck Loading (Using CAT 5230 Front Shovel)					
Bucket Capacity	m^3	17			From Caterpillar web site
Bucket Fill Factor	no.	90%			Arbitrary estimate
Actual Bucket Capacity	m^3	15.3			
Bucket Cycle Time (Dig to Load)	min	0.765			
Bucket Cycle Time (Dig to Load)	hr	0.013			45.9 seconds per bucket load cycle
Hourly Production Per Front Shovel	m3/hr	1,200			Ref: Harza Estimate
Daily Production Per Front Shovel	m3/day	24,000			
Estimated Number of Front Shovels Required	**no.**	**2**			
Hourly Cost per Shovel	$/hr		$592.95		Ref: Harza Estimate. Incl. Maint, O/H, Taxes, Bonds and Profit
Daily Cost per Shovel @ 24 pay hours per day	$/day		$14,230.73		
Daily Cost for 2 shovel(s)	$/day		$28,461.47		
CAT D-9 Bulldozer					
Estimated no. required	**no.**	1			
Hourly Rate	$/hr		$213.99		Ref: Harza Estimate. Incl. Maint, O/H, Taxes, Bonds and Profit
Daily Rate	$/day		$5,135.84		
CAT 16H Grader					
Estimated no. required	**no.**	1			
Hourly Rate	$/hr		$101.20		Based on Harza Estimate. Incl. Maint, O/H, Taxes, Bonds and Profit
Daily Rate	$/day		$2,428.86		

Causeway Costs

Item	Unit	Qty	Price/Rate	Total	Comments
Core Construction					
Equipment Costs					
CAT 789 Off-Road Trucks	day	250	$111,366	$27,841,470	
CAT 5230 Front Shovels	day	250	$28,461	$7,115,370	
CAT D-9 Bulldozers	day	250	$5,136	$1,283,960	
CAT 16H Graders	day	250	$2,429	$607,220	
Total Equipment Cost				**$36,848,020**	
Armor Construction					
Placement	m^3	**749,700**	**$20**	**$14,994,000**	

Total Cost - Causeway	**$51,842,020**
Unit cost per m^3	**$8.34**

Panama - Artificial Island Pre-feasibility Study
PRELIMINARY COST ESTIMATE FOR CHANNEL ALIGNMENT P1-A (Full Breakwater)

ISLAND CONSTRUCTION

General Specifications

Earthworking at Island Site

Island Rock Fill	m^3	57,091,158		
Island Overburden Fill	m^3	18,031,000		

Equipment

CAT D-9 Bulldozer

Working Rate per Dozer / Hour	m3/hr	1,200		
Working Rate per Dozer / Day	m3/day	18,000		Arbitrary estimate
Estimated Bulldozers Required	no.	3		
Hourly Cost per Dozer	$/hr		$213.99	
Daily Cost per Dozer @ 20 pay hours per day			$4,279.86	Based on Harza Estimate. Incl. Maint, O/H, Taxes, Bonds and Profit
Daily Cost for 3 dozer(s)			$12,839.59	

Island Costs

Item	Unit	Qty	Price/Rate	Total	Comments
Island Fill					
Equipment Costs					
CAT D-9 Bulldozers	day	1,754	$12,839.59	$ 22,520,644	

Total Cost - Island Fill	**$22,520,644**
Unit cost per m^3	**$0.39**

ISLAND REVETMENT ARMOR

Revetment Costs

Item	Unit	Qty	Price/Rate	Total	Comments
Armor Stone Placement	m^3	960,900	$ 15.00	$ 14,413,499	

Total Cost - Island Revetment	**$14,413,499**
Unit cost per m^3	**$15.00**

BREAKWATER

Breakwater Costs

Item	Unit	Qty	Price/Rate	Total	Comments
Breakwater Construction					
Armor Placement	m^3	1,502,800	20	$ 30,056,000	
Core Placement	m^3	3,580,200	10	$ 35,802,000	

TOTAL COST - BREAKWATER	**$65,858,000**
Unit cost of breakwater per m^3	**$12.96**

Panama Artificial Island Pre-Feasibility Study

Island Volume Calculations-Channel Alignment P1-A (Full Breakwater)

Item	Quantity	Unit	Comments
Material from Channel			
Wet Overburden	1,450,000	m^3	Taken from Harza report
Dry Overburden	12,420,000	m^3	Taken from Harza report
Wet Rock	5,820,000	m^3	Taken from Harza report
Dry Rock	49,660,000	m^3	Taken from Harza report
Bulking Factors (placed:in-situ)			
Wet Overburden	1.3		Materials handbook
Dry Overburden	1.3		Materials handbook
Wet Rock	1.25		Materials handbook
Dry Rock	1.25		Materials handbook
Bulked Volumes			Used for transportation and fill calculations
Wet Overburden	1,885,000	m^3	
Dry Overburden	16,146,000	m^3	
Total Overburden	***18,031,000***	m^3	
Wet Rock	7,275,000	m^3	
Dry Rock	62,075,000	m^3	
Total Rock (Gross)	***69,350,000***	m^3	
Rock Available after Breakwater and Causeway	***58,052,058***		Ignores railway formation fill at island, which becomes part of island fill
Breakwater Calcs			
Length	3400	m	Refer report Figure 9-5
Bottom elevation (MLWS)	-16	m	Includes 3m settlement
Sectional Area - Armor	442.00	m^2	Refer report Figure 9-4 for typical geometry
Sectional Area - Core	1053.00	m^2	Refer report Figure 9-4 for typical geometry
Armor Volume	***1,502,800***		
Core Volume	***3,580,200***		
Total Volume	***5,083,000***		Volume of rock required for breakwater
Causeway Calcs			
Start STA	17420		Refer report Figure 9-5
Finish STA	21240		Refer report Figure 9-5
Length	3570	m	Total causeway length (excluding trestle and bridge)
Avg. Crest Elevation (MLWS)	12.3	m	Converted from PLD
Avg. Bottom Elevation (MLWS)	-6.5	m	Includes 3m settlement
Avg. Height	18.8	m	
Crest Width	55	m	
Avg. Base Width	130.2	m	
Sectional Area - Armor	210	m^2	
Sectional Area - Core	1530.88	m^2	
Volumes (used in cost estimates)			
Causeway Volume- Armor	***749,700***		Armor material required for causeway
Causeway Volume- Core	***5,465,242***		Core material required for causeway
Causeway Fill Volume - Total	***6,214,942***		Total material requiring transportation for causeway construction
Railway Formation @ Island			Assumed to be trucked from stockpile area
Length	2500	m	Material required for railway access formation at island site - included in causeway cost calculations
Crest Elevation (MLWS)	8.3	m	
Avg. Bottom Elevation (MLWS)	-13	m	Includes 3m settlement
Height	21.3	m	
Crest Width	20	m	Clearance for 2 tracks and side-dumping of material
Base Width	105.2	m	
Sectional Area	1333.38	m^2	
Total Formation Volume	***3,333,450***	m^3	Used for calculating truck haul requirements and costs
Island Assumptions/Criteria			
MHWS Elevation (MLWS)	5	m	
Freeboard Allowance	3.3	m	
Finished Surface Elevation (MLWS)	8.3		
Avg. Water Depth (MLWS)	-13	m	Includes 3m settlement
Avg. Island Height	21.3		
Min. Overburden Depth	4	m	
Island Revetment Geometry			
Perimeter Length	8,070	m	Based on layout as shown in report Figure 9-5
Height	21.3	m	
Side Slopes	2H:1V		
Total Sectional Area	453.69	m^2	
Sectional Area - Armor	119.07	m^2	
Sectional Area - Core	334.62	m^2	
Island Volumes			
Revetment Volume - Armor	960,900	m^3	
Revetment Volume - Core	2,700,378	m^3	
Island Rock Fill (within revetment)	54,390,780	m^3	Used to calculate island surface area (excludes revetment volumes)
Total Island Rock Fill	57,091,158	m^3	Used to calculate island construction cost (excludes revetment armor)
Bulked Overburden from Excavation	18,031,000	m^3	
Material available from railway formation	2,325,000	m^3	Assumes 75% of usable cut material
Total Overburden Available to Island	20,356,000	m^3	Used to calculate island surface area
Total Material For Island Fill	74,746,780	m^3	Excludes revetment material
Overburden required @ min 4m deep	14,000,000	m^3	Check calculation to ensure minimum overburden depth achieved

Calculated Island Area	350.92	Ha
Actual Area as Designed	350.00	Ha

Panama - Artificial Island Pre-feasibility Study
PRELIMINARY COST ESTIMATE FOR CHANNEL ALIGNMENT P2-A (Full Breakwater)

Note: Rates throughout are taken from RS Means, "get-a-quote.net", previous project data or from recent research

RAIL CONSTRUCTION

Specifications

Item	Unit	Qty	Price/Rate	Total	Comments
On Formation					
Track section length	m	17,450			Distance from north end of channel to shoreline
No. tracks	ea	2			Double track
Total track length	m	34,900			
Total no. ties	ea	58,167			
Ballast volume	m^3	123,197			
Ballast mass @ 1.8 t/m^3	t	221,755			
On Trestle					
Track section length	m	200			
No. tracks	ea	2			Double track
Total track length	m	400			
Total no. ties	ea	667			
Ballast volume	m^3	668			
Ballast mass @ 1.8 t/m^3	t	1,202			
On Causeway/Island					
Track section length	m	5,575			Includes causeway + 5000m for track on island
No. tracks	ea	2			Double track
Total track length	m	11,150			
Total no. ties	ea	18,583			
Ballast volume	m^3	18,621			
Ballast mass @ 1.8 t/m^3	t	33,517			

Railway Costs

Note: rates taken from "get-a-quote.net" where applicable or other project data

Item	Unit	Qty	Price/Rate	Total	Comments
Track Laying on Formation					
Survey	Ha	349	$ 2,000.00	$ 698,000	200m Corridor to shoreline, guesstimate
Boreholes	ea	20	$ 2,400.00	$ 48,000	Assuming each 20m deep @ $120 per metre ($35 per foot)
Clearing and Stripping	Ha	52.35	$ 14,820.00	$ 775,827	Assume $6000 per Acre
Formation Earthworks	m^3	7,540,000	$ 1.10	$ 8,284,038	Total of Cut + Fill Volumes
Ballast	t	221,755	$ 34.00	$ 7,539,656	
Treated Wood Ties	ea	58,167	$ 58.00	$ 3,373,667	
Tie plates	ea	116,334	$ 8.60	$ 1,000,472	
132lb Rail	m	69,800	$ 62.34	$ 4,351,050	
Track spikes	ea	232,667	$ 6.26	$ 1,456,493	
Rail anchors	ea	116,333	$ 5.90	$ 686,367	Anchor pattern: 1 tie in 2
Turnout (#10)	ea	8	$ 22,500.00	$ 180,000	Add 50% to cost for #8 turnout
Total Cost - Track on Formation				$ 28,393,571	
Unit Cost per km				813,600	
Track Laying on Trestle					
Ballast	t	1,202	$ 34.00	$ 40,882	
Treated Wood Ties	ea	667	$ 58.00	$ 38,667	
Tie plates	ea	1,334	$ 8.60	$ 11,472	
132lb Rail	m	800	$ 62.34	$ 49,869	
Track spikes	ea	2,667	$ 6.26	$ 16,693	
Rail anchors	ea	1,333	$ 5.90	$ 7,867	Anchor pattern: 1 tie in 2
Total Cost - Track on Trestle				$ 165,449	
Unit Cost per km				413,700	
Track Laying on Causeway/Island					
Ballast	t	33,517	$ 34.00	$ 1,139,576	
Treated Wood Ties	ea	18,583	$ 58.00	$ 1,077,814	
Tie plates	ea	37,166	$ 8.60	$ 319,628	
132lb Rail	m	22,300	$ 62.34	$ 1,390,092	
Track spikes	ea	74,332	$ 6.26	$ 465,318	
Rail anchors	ea	37,166	$ 5.90	$ 219,279	Anchor pattern: 1 tie in 2
Turnout (#10)	ea	1	$ 22,500.00	$ 22,500	Add 50% to cost for #8 turnout
Total Cost - Track on Causeway/Island				$ 4,634,207	
Unit Cost per km				415,700	

Item	Unit	Qty	Price/Rate	Total	Comments
Track Structures					
Bridge @ STA 9+000	ea	1	$ 3,500,000.00	$ 3,500,000	Rail bridge over Pan American Highway
Culverts					
Pipe (Class 5)	ea	64	$ 23,580.58	$ 1,509,157	4 x 1.8m (72") pipe @ each of 16 locations
Headwall	ea	32	$ 4,703.60	$ 150,515	Assume 1.8m (72") dia pipe
Rail Crossings	ea	7	$ 1,819.00	$ 12,733	Assume 8m-wide roadway

Total Cost - Track Laying	**$ 33,193,228**
Total Cost - Railway Structures	**$ 5,172,405**
Total Cost - Railway Construction	**$ 38,365,633**

Panama - Artificial Island Pre-feasibility Study
PRELIMINARY COST ESTIMATE FOR CHANNEL ALIGNMENT P2-A (Full Breakwater)

MATERIAL HAULAGE

General Specifications

Item	Unit	Qty	Price/Rate	Total	Comments
Quantities					
Total Bulked Rock to be Hauled	m3	37,412,500			
Total Bulked Overburden to be Hauled	m3	6,120,000			
Special Handling (Armor Stone)					
Causeway Armor	m^3	813,750			
Revetment Armor	m^3	619,167			
Breakwater Armor	m^3	1,129,220			
Armor Stone Volume by Truck	m^3	**2,562,137**			Armor stone to be trucked to placement locations
Total Material Volume to be Hauled by Rail	m^3	**40,970,363**			Excludes armor stone, which is hauled by truck
Site/Work Specifications					
Rail transport haulage distance (channel to island)	km	23			
Train Operating Hours Per Day	hr	20			
Working Hours Per Day (Earthworking)	hr	15			
Target Daily Production	m^3	48,000			Production rate estimate -input cell
Equipment Specifications					
Rail Transport Cycle					
Rail Car Capacity	m^3	40			
Rail Cars Per Train	no.	50			
Total Train Capacity	m^3	2,000			
Train Trips Required Per Day to Meet Target	no.	24			To meet target, requires 2 tracks at unloading site
Actual Material Hauled per Day	m^3	48,000			Target estimate - arbitrary
Estimated no. of 50-car Trains Required	no.	6			
Trips Per Train Per Day	no.	4.30			
Estimated Time to Completion (Rail Haul)	***days***	***854***			2.5 years
Average Train Speed	km/hr	20			
Dump Time Per Rail Car	min	1.20			Conservative allowance
Minimum Travel Time (Round Trip)	hr	2.30			
Estimated Dump Time Per Train	hr	1.00			
Time to Load a Train	hr	0.83			Based on no. rail cars x 1.2min per car
Train Movements/Delays	hr	0.50			Calculation based on loading rate of 2 shovels per train
No. simultaneous trains (loading/dumping)	no.	2.00			Conservative time estimate
Total trip cycle time	***hr***	***4.63***			Indicates no. of trains needing to be unloaded or loaded simultaneously
Total Rail Cars Required	no.	300			in order to meet daily haulage target
Daily Operations Cost for 6 Locos	$/day	7,800			
Daily Maintenance Cost for 6 Locos	$/day	5,400			
Daily Maintenance Cost for 300 Locos	$/day	22,500			
Track Maintenance					
Annual maintenance cost	km	46.45	$ 25,000.00	$ 1,161,250	Based on figures from 1993/94 Westrail data
Special Material Handling (Armor Stone)					
CAT 789 Off-Road Truck (200 ton Capacity)					
Truck Capacity	m^3	105			
Estimated Unload Time	min	3.0			
Estimated Unload Time	hr	0.05			
Estimated Load Time	hr	0.088			
Estimated Travel Time	hr	2.300			Truck capacity / Shovel Production
Total Cycle Time	***hr***	***2.438***			Using round-trip distance of 46 km
Trips per Truck per Day (assuming 20 working hours	no.	8.3			
Daily Haul Per Truck	m^3	872			
Estimated Number of Trucks Required	no.	2			Arbitrary input
Total Daily Haul	m^3	14,467			
No. Days to move material	**day**	**177**			Used to calculate equpment requirements
Hourly Cost per truck	$/hr		$331.45		
Daily Cost per truck @ 24 pay hours per day	$/day		$7,954.70		Based on Harza Estimate. Incl. Maint, O/H, Taxes, Bonds and Profit
Daily Cost for 2 truck(s)	$/day		$15,909.41		
Shovels estimated for truck loading	**no.**	**1**			
Hourly Cost per Shovel	$/hr		$592.95		
Daily Cost per shovel @ 24 pay hours per day	$/day		$14,230.73		Based on Harza Estimate. Incl. Maint, O/H, Taxes, Bonds and Profit
Daily Cost for 1 truck(s)	$/day		$14,230.73		
Train Loading (Using CAT 5230 Front Shovel)					
Bucket Capacity	m^3	17			Direct loading using front shovels
Bucket Fill Factor	no.	90%			Ref: Caterpillar web site
Actual Bucket Capacity	m^3	15.3			
Bucket Cycle Time	min	0.765			
Bucket Cycle Time	hr	0.013			
Loading Rate Per Front Shovel	m3/hr	1,200			45.9 seconds per bucket load cycle
Hourly Loading Rate Per Front Shovel	m3/day	18,000			based on Harza estimates
Total Shovels Required for Train Loading	**no.**	**2**			
Total Shovels Required for Train Loading	**no.**	**4**			
Hourly Cost per Shovel	$/hr		$592.95		
Daily Cost per Shovel (train loading 24 pay hours)	$/day		$14,230.73		Ref: Harza Estimate. Incl. Maint, O/H, Taxes, Bonds and Profit
Daily Cost for 2 shovels (train loading 24 pay hours)	$/day		$28,461.47		

Haulage Costs

Panama - Artificial Island Pre-feasibility Study
PRELIMINARY COST ESTIMATE FOR CHANNEL ALIGNMENT P2-A (Full Breakwater)

Item	Unit	Qty	Price/Rate	Total	Comments
Rail Haulage Costs					
Front Shovels (train loading)	day	854	$ 28,461.47	$ 24,306,092	
Rail Transportation	tonne.km	1,507,709,350	$ 0.043	$ 64,831,502	** Cost comparison provided by 'Rollingstock Costs' below
Track Maintenance	year	2.48	$ 1,161,250	$ 2,874,514	
Truck Haulage Costs					
Front Shovels (truck loading)	day	177	$ 14,230.73	$ 2,520,311	
Truck Transportation (Armor Stone Handling)	day	177	$ 15,909.41	$ 2,817,610	
Truck Haulage Roads	km	25	$ 200,000	$ 5,000,000	
Total Cost - Material Haulage				**$103,511,280**	
Unit cost of transport per m^3				**$2.38**	

**Rollingstock Costs

Item	Unit	Qty	Price/Rate	Total	Comments
Rollingstock Purchase Costs					
Locomotives	no.	7	$ 2,200,000	$ 15,400,000	Includes one backup loco
Side-dump rail cars	no.	310	$ 120,000.00	$ 37,200,000	Includes 10 backup rail cars. (Compressed air operated)
Operating/Maintenance Costs					
Operational cost of locomotives	day	854	$ 7,800.00	$ 6,661,200	
Maintenance cost of locomotives	day	854	$ 5,400.00	$ 4,611,600	
Maintenance cost of rail cars	day	854	$ 22,500.00	$ 19,215,000	
Salvage Value					
Locomotives	no.	7	$ (660,000.00)	$ (4,620,000)	
Side-dump rail cars	no.	310	$ (48,000.00)	$ (14,880,000)	
Total Cost - Rollingstock				**$63,587,800**	
Unit Cost per m^3				**$1.55**	

TRESTLE CONSTRUCTION

Specifications

Item	Unit	Qty	Price/Rate	Total	Comments
Length	m	200			
Width	m	40.1			
Surface Area	m^2	8,020			

Trestle Costs

Item	Unit	Qty	Price/Rate	Total	Comments
Trestle Structure					
Trestle in-place	m^2	8,020	$ 1,350.00	$ 10,827,000	125 $/sf based on recent bid prices for similar structure
Total Cost - Trestle				**$10,827,000**	
Unit cost of Trestle per m^2				**$1,350.00**	

BRIDGE CONSTRUCTION

Bridge Costs

Item	Unit	Qty	Price/Rate	Total	Comments
Superstructure					
Length	m	50			
Width	m	40.1			
Total Cost - Superstructure	m^2	2005	$ 1,500	**$3,007,500**	
Approaches					
Total Cost - MSE Wall	m^2	30140	$ 484.00	**$14,587,760**	*Optional - not included in costs*
Note: Fill costs included in causeway cost calculations					

Panama - Artificial Island Pre-feasibility Study
PRELIMINARY COST ESTIMATE FOR CHANNEL ALIGNMENT P2-A (Full Breakwater)

CAUSEWAY CONSTRUCTION

Causeway Specifications

Item	Unit	Qty	Price/Rate	Total	Comments
Quantity Information					
Armor Volume	m^3	813,750			
Core Volume	m^3	5,932,160			
Rail Formation	m^3	2,266,746			Creation of rail formation at island for train unloading
Total Haul Volume	m^3	8,198,906			Armor volume excluded (costed separately)
Site/Work Specifications					
Round Trip Haul Distance	km	13.6			Refer Figures 8-3, 8-4
Average Truck Speed	km/h	20.0			
Working Hours Per Day	hr	20			Working hours @ 75% of pay hours
Pay Hours Per Day	hr	24			
Daily Production Target	m^3	36,000			Arbitrary estimate to generate reasonable equipment requirements
Estimated Time to Completion	days	230			0.67 Years
Equipment Specifications					
CAT 789 Off-Road Truck					
Truck Capacity	m^3	105			Ref: Caterpillar web site
Estimated Unload Time	min	3.0			Arbitrary estimate
Estimated Unload Time	hr	0.05			
Estimated Load Time	hr	0.088			Truck capacity / Shovel Production
Estimated Travel Time	hr	0.680			
Total Cycle Time	hr	0.818			
Truck Trips Per Day	no.	24			
Daily Haul Per Truck	m^3	2,520			
Estimated Number of Trucks Required	no.	15			
Hourly Cost per truck	$/hr		$331.45		Ref: Harza Estimate. Incl. Maint, O/H, Taxes, Bonds and Profit
Daily Cost per truck @ 20 pay hours per day	$/day		$7,954.70		
Daily Cost for 24 trucks	$/day		$119,320.56		
Truck Loading (Using CAT 5230 Front Shovel)					
Bucket Capacity	m^3	17			From Caterpillar web site
Bucket Fill Factor	no.	90%			Arbitrary estimate
Actual Bucket Capacity	m^3	15.3			
Bucket Cycle Time (Dig to Load)	min	0.765			
Bucket Cycle Time (Dig to Load)	hr	0.013			45.9 seconds per bucket load cycle
Hourly Production Per Front Shovel	m^3	1,200			Based on Harza data, which is considered reasonable
Daily Production Per Front Shovel	m^3	24,000			
Estimated Number of Front Shovels Required	no.	2			
Hourly Cost per Shovel	$/hr		$592.95		Ref: Harza Estimate. Incl. Maint, O/H, Taxes, Bonds and Profit
Daily Cost per Shovel @ 24 pay hours per day	$/day		$14,230.73		
Daily Cost for 2 shovel(s)	$/day		$28,461.47		
CAT D-9 Bulldozer					
Estimated no. dozers required	no.	1			
Hourly Rate	$/hr		$213.99		Ref: Harza Estimate. Incl. Maint, O/H, Taxes, Bonds and Profit
Daily Rate	$/day		$5,135.84		
CAT 16H Grader					
Estimated no. graders required	no.	1			
Hourly Rate	$/hr		$101.20		Ref: Harza Estimate. Incl. Maint, O/H, Taxes, Bonds and Profit
Daily Rate	$/day		$2,428.86		

Causeway Costs

Item	Unit	Qty	Price/Rate	Total	Comments
Core Construction					
Equipment Costs					
CAT 789 Off-Road Trucks	day	230	$119,321	$27,443,730	
CAT 5230 Front Shovels	day	230	$28,461	$6,546,140	
CAT D-9 Bulldozers	day	230	$5,136	$1,181,250	
CAT 16H Graders	day	230	$2,429	$558,640	
Total Equipment Cost				**$35,729,760**	
Armor Construction					
Placement	**m3**	**813,750**	**$20**	**$16,275,000**	

Total Earthworking Cost - Causeway	**$52,004,760**
Unit cost per m^3	**$7.71**

Panama - Artificial Island Pre-feasibility Study
PRELIMINARY COST ESTIMATE FOR CHANNEL ALIGNMENT P2-A (Full Breakwater)

ISLAND CONSTRUCTION

General Specifications

Item	Unit	Qty	Price/Rate	Total	Comments
Earthworking at Site					
Island Rock Fill	m3	26,374,183			
Island Overburden Fill	m3	6,120,000			
Equipment					
CAT D-9 Bulldozer					
Working Rate per Dozer / Hour	m3/hr	1,200			
Working Rate per Dozer / Day	m3/day	18,000			Arbitrary estimate
Estimated Bulldozers Required		3			
Hourly Cost per Dozer	$/hr		$213.99		
Daily Cost per Dozer @ 20 pay hours per day	$/day		$4,279.86		Ref: Harza Estimate. Incl. Maint, O/H, Taxes, Bonds and Profit
Daily Cost for 3 dozer(s)			$12,839.59		

Island Costs

Item	Unit	Qty	Price/Rate	Total	Comments
Island Fill					
Equipment Costs					
CAT D-9 Bulldozers	day	854	$ 12,839.59	$ 10,965,012	

Total Cost - Island Fill	$10,965,012
Unit cost per m^3	$0.42

ISLAND REVETMENT ARMOR

Revetment Costs

Item	Unit	Qty	Price/Rate	Total	Comments
Placement	m^3	619,167	$ 15.00	$ 9,287,508	

Total Cost - Island Revetment	$9,287,508
Unit cost per m^3	$15.00

BREAKWATER

Breakwater Costs

Item	Unit	Qty	Price/Rate	Total	Comments
Breakwater Construction					
Armor Placement	m^3	1,129,220	20	$ 22,584,400	
Core Placement	m^3	2,544,020	10	$ 25,440,200	

TOTAL COST - BREAKWATER	$ 48,024,600
Unit cost of breakwater per m^3	13.07

Panama Artificial Island Pre-Feasibility Study

Island Volume Calculations-Channel Alignment P2-A (Full Breakwater)

Item	Quantity	Unit	Comments
Material from Channel			
Wet Overburden	2,050,000	m^3	Taken from Harza report
Dry Overburden	5,430,000	m^3	Taken from Harza report
Wet Rock	8,200,000	m^3	Taken from Harza report
Dry Rock	21,730,000	m^3	Taken from Harza report
Bulking Factors (placed:in-situ)			
Wet Overburden	1.3		Materials handbook
Dry Overburden	1.3		Materials handbook
Wet Rock	1.25		Materials handbook
Dry Rock	1.25		Materials handbook
Bulked Excavation Volumes			Used for transportation and fill calculations
Wet Overburden	2,665,000	m^3	
Dry Overburden	7,059,000	m^3	
Total Overburden	***9,724,000***	m^3	
Wet Rock	10,250,000	m^3	
Dry Rock	27,162,500	m^3	
Total Rock (Gross)	***37,412,500***	m^3	
Rock Available after Breakwater and Causeway	***26,993,350***		Ignores railway formation fill at island, which becomes part of island fill
Breakwater Calcs			
Length	2620	m	Refer report Figure 9-7
Bottom elevation (MLWS)	-15	m	Includes 3m settlement
Sectional Area - Armor	431.0	m^2	Refer report Figure 9-4 for typical geometry
Sectional Area - Core	971.0	m^2	Refer report Figure 9-4 for typical geometry
Armor Volume	***1,129,220***		
Core Volume	***2,544,020***		
Breakwater Volume	***3,673,240***		Volume of rock required for breakwater
Causeway Calcs			
Start STA	17420		Refer report Figure 9-7
Finish STA	21545		Refer report Figure 9-7
Length	3875	m	Total causeway length (excluding trestle and bridge)
Crest Elevation (MLWS)	12.3	m	Converted from PLD
Avg. Bottom Elevation (MLWS)	-6.5	m	Includes 3m settlement
Height	18.8	m	
Crest Width	55	m	
Base Width	130.2	m	
Sectional Area - Armor	210		
Sectional Area - Core	1530.88	m^2	
Volumes (used in cost estimates)			
Causeway Volume- Armor	***813,750***	m3	Armor material required for causeway
Causeway Volume- Core	***5,932,160***	m3	Core material required for causeway
Causeway Volume - Total	***6,745,910***	m3	Total material requiring transportation for causeway construction
			Assumed to be trucked from stockpile area
Railway Formation @ Island			Material required for railway access formation at island site -
Length	1700	m	included in causeway cost calculations
Crest Elevation (MLWS)	8.3	m	
Avg. Bottom Elevation (MLWS)	-13	m	Includes 3m settlement
Height	21.3	m	
Crest Width	20	m	Clearance for 2 tracks and side-dumping of material
Base Width	105.2	m	
Sectional Area	1333.38	m^2	
Total Formation Volume	***2,266,746***	m^3	Used for calculating truck haul requirements and costs
Island Assumptions/Criteria			
MHWS Elevation (MLWS)	5	m	
Freeboard Allowance	3.3	m	
Finished Surface Elevation (MLWS)	8.3		
Avg. Water Depth (MLWS)	-13	m	Includes 3m settlement
Avg. Island Height	21.3		
Min. Overburden Depth	4	m	
Island Revetment Geometry			
Perimeter Length	5,200	m	Based on layout as shown in report Figure 9-7
Height	21.3	m	
Side Slopes	2H:1V		
1/2 Dike Sectional Area	453.69	m^2	
Sectional Area - Armor	119.07	m^2	
Sectional Area - Core	334.62	m^2	
Island Volumes			
Revetment Volume - Armor	619,167	m^3	
Revetment Volume - Core	1,740,021	m^3	
Island Rock Fill (within revetment)	24,634,162	m^3	Used to calculate island surface area (excludes revetment volumes)
Total Island Rock Fill	26,374,183	m^3	Used to calculate island construction cost (excludes revetment armor)
Bulked Overburden from Excavation	9,724,000	m^3	
Material available from railway formation	2,325,000	m^3	Assumes 75% of usable cut material
Total Overburden Available to Island	12,049,000	m^3	Used to calculate island surface area
Total Material For Island Fill	36,683,162	m^3	Excludes revetment material
Overburden required @ min 4m deep	6,120,000	m^3	

Calculated Island Area	172.22	Ha
Actual Area as Designed	153.00	Ha

Panama Artificial Island Pre-Feasibility Study
Alternatives P1-A and P2-A

Table of Standard Input Values

Item	Unit	Total	Comments
Railway Information			
Formation Length	m	17450	
No. main-line tracks	no.	2	
Formation cut volume	m3	5320000	Calculated using digital terrain model
Formation fill volume	m3	2220000	Calculated using digital terrain model
Width at Base of Formation	m	30	
Ballast Depth (from top of tie to formation)	m	0.6	
Ballast Width	m	6	
Spacing of ties	m	0.6	
Wood tie dimensions			
width	m	0.2	
depth	m	0.15	
length	m	2.6	
volume	m3	0.078	
Annual Maintenance	$/year/km	$ 25,000	Factored from 1993/94 Westrail data
Equipment Specifications			
CAT 789 Off-Road Truck (105m^3 Capacity)			
Hourly Rate	$/hr	$ 331.45	
Load Capacity	m3	105.00	
Average Speed	km/h	20	
CAT 5230 Front Shovel (17m^3 bucket)			
Hourly Rate	$/hr	$ 592.95	
Single Bucket Capacity	m3	17.00	
Hourly Dig/Load Production Rate	m3/hr	1,200.00	
CAT D-9 Bulldozer			
Hourly Rate	$/hr	$ 213.99	
Hourly Production	m3/hr	1,000	
CAT 16H Grader			
Hourly Rate	$/hr	$ 101.20	
General			
(Shovel) Pay Hours	hr	24	
(Train) Loading Hours	hr	20	
Pay Hours	hr	20	
Daily Working Hours (Factored @ 75%)	hr	15	
Rail Haul			
One-way Haul Distance	km	23	
Daily Target (loading)	m3	48000	Applies to island earthworking also
Average Train Speed	km/h	20	
Rail Car Capacity	m3	40	
Rail Cars per Unit Train	no.	50	
Train Set Capacity	m3	2000	
Locomotive - Purchase Cost	ea	$ 2,200,000	Research results
Locomotive - Salvage Value (@ 30%)	ea	$ 660,000	Research results
Side-dump rail car - Purchase Cost	ea	$ 120,000	Research results
Side-dump rail car - Salvage Value (@ 40%)	ea	$ 48,000	Research results
Locomotive operational cost	$/day/unit	$ 1,300	Research results
Locomotive maintenance cost	$/day/unit	$ 900	Research results
Rail car maintenance cost	$/day/unit	$ 75	Research results
Causeway Construction			
Round Trip Haul Distance (P1)	km	13	
Round Trip Haul Distance (P2)	km	13.6	
Daily Production Target	m3	36000	

D4 - Island Cost using Rail Transportation System (includes rail model and costs) – P1 and P2 Locks Alignments - Short Breakwater Alternatives

PRELIMINARY COST ESTIMATE				DATE PREPARED 2-Nov-01
CLIENT AUTORIDAD DEL CANAL DE PANAMA		CONTRACT NO.		
		ESTIMATED BY MOFFATT & NICHOL ENGINEERS		
PROJECT TITLE PRE-FEASIBILITY STUDY FOR ARTIFICIAL ISLAND DEVELOPMENT TRANSPORTATION BY RAIL		STATUS OF DESIGN Conceptual		
Item	**Quantity**	**Units**	**Unit Cost**	**Total**
Construction Costs Using Material Quantities from Channel Alignment P1				
Alternative P1-B, Short Breakwater				
General				
Mobilization and Demobilization	1	LS	$2,500,000	$2,500,000
Material Haulage				
New Railway on Formation	34.9	km	$813,600	$28,394,640
New Railway on Trestle	0.4	km	$413,700	$165,480
New Railway on Causeway/Island	12.1	km	$415,500	$5,044,170
Railway Structures	1.0	LS	$5,172,405	$5,172,405
Material Transportation	87,381,000	m^3	$2.48	$216,682,203
Island Construction				
Trestle	8,020	m^2	$1,350.00	$10,827,000
Causeway	6,214,942	m^3	$8.34	$51,842,020
Causeway Bridge	2,005	m^2	$1,500.00	$3,007,500
Island Fill	78,844,708	m^3	$0.38	$29,580,787
Island Revetment Construction	960,900	m^3	$15.00	$14,413,499
Offshore Breakwater	1,360,450	m^3	$12.96	$17,626,700
Rock Crushing/Sorting Plant	1	LS	$1,000,000	$1,000,000
Sub Total - Island Construction				***$386,256,404***
Engineering and Construction Administration			4.00%	$15,450,256
Contingencies			20.00%	$80,341,332
Grand Total Cost				***$482,047,992***
Cost per sq. metre for Island Construction				***$131***

Item	**Quantity**	**Units**	**Unit Cost**	**Total**
Construction Costs Using Material Quantities from Channel Alignment P2				
Alternative P2-B, Short Breakwater				
General				
Mobilization and Demobilization (6%)	1	LS	$2,500,000.00	$2,500,000
Material Haulage				
New Railway on Formation	34.9	km	$813,600.00	$28,394,640
New Railway on Trestle	0.4	km	$413,700.00	$165,480
New Railway on Causeway/Island	11.2	km	$415,500.00	$4,632,825
Railway Structures	1.0	LS	$5,172,405.06	$5,172,405
Material Transportation	43,532,500	m^3	$2.34	$102,083,159
Island Construction				
Trestle	8,020	m^2	$1,350.00	$10,827,000
Causeway	6,745,910	m^3	$8.40	$56,665,170
Causeway Bridge	2,005	m^2	$1,500.00	$3,007,500
Island Fill	33,172,512	m^3	$0.39	$12,854,924
Island Revetment Construction	619,167	m^3	$15.00	$9,287,508
Offshore Breakwater	1,254,890	m^3	$13.10	$16,443,700
Rock Crushing/Sorting Plant	1	LS	$1,000,000.00	$1,000,000
Sub Total - Island Construction				***$253,034,312***
Engineering and Construction Administration			4.00%	$10,121,372
Contingencies			20.00%	$52,631,137
Grand Total Cost				***$315,786,821***
Cost per sq. metre for Island Construction				***$173***

Panama - Artificial Island Pre-feasibility Study

PRELIMINARY COST ESTIMATE FOR CHANNEL ALIGNMENT P1-B (Short Breakwater)

Note: Rates throughout are taken from RS Means, "get-a-quote.net", previous project data or from recent research

RAILWAY CONSTRUCTION

Track Specifications

Item	Unit	Qty	Price/Rate	Total	Comments
On Formation					
Track section length	m	17,450			Includes distance from north end of channel to shoreline
No. tracks	ea	2			Double track
Total track length	m	34,900			
Total no. ties	ea	58,167			
Ballast volume	m^3	123,197			
Ballast mass @ 1.8 t/m^3	t	221,755			
On Trestle					
Track section length	m	200			
No. tracks	ea	2			
Total track length	m	400			
Total no. ties	ea	667			
Ballast volume	m^3	668			
Ballast mass @ 1.8 t/m^3	t	1,202			
On Causeway/Island					
Track section length	m	6,070			
No. tracks	ea	2			
Total track length	m	12,140			
Total no. ties	ea	20,233			
Ballast volume	m^3	20,274			track length x 6m wide x 0.6m deep, less total tie volume
Ballast mass @ 1.8 t/m^3	t	36,493			

Railway Costs

Item	Unit	Qty	Price/Rate	Total	Comments
Track Laying on Formation					
Survey	Ha	349	$ 2,000.00	$ 698,000	200m Corridor to shoreline, guesstimate
Boreholes	ea	20	$ 2,400.00	$ 48,000	Assuming 20m deep @ $120 per metre ($35 per foot)
Clearing and Stripping	Ha	52.35	$ 14,820.00	$ 775,827	Assume $6000 per Acre
Formation/Roadbed Earthworks	m^3	7,540,000	$ 1.10	$ 8,284,038	Cut + Fill Volumes
Ballast	t	221,755	$ 34.00	$ 7,539,656	
Treated Wood Ties	ea	58,167	$ 58.00	$ 3,373,667	
Tie plates	ea	116,334	$ 8.60	$ 1,000,472	
132lb Rail	m	69,800	$ 62.34	$ 4,351,050	
Track spikes	ea	232,667	$ 6.26	$ 1,456,493	
Rail anchors	ea	116,333	$ 5.90	$ 686,367	Anchor pattern: 1 tie in 2
Turnout (#10)	ea	8	$ 22,500.00	$ 180,000	Add 50% to cost for #8 turnout
Total Cost - Track on Formation				$ 28,393,571	
Unit Cost per km				813,600	
Track Laying on Trestle					
Ballast	t	1,202	$ 34.00	$ 40,882	
Treated Wood Ties	ea	667	$ 58.00	$ 38,667	
Tie plates	ea	1,334	$ 8.60	$ 11,472	
132lb Rail	m	800	$ 62.34	$ 49,869	
Track spikes	ea	2,667	$ 6.26	$ 16,693	
Rail anchors	ea	1,333	$ 5.90	$ 7,867	Anchor pattern: 1 tie in 2
Total Cost - Track on Trestle				$ 165,449	
Unit Cost per km				413,700	
Track Laying on Causeway/Island					
Ballast	t	36,493	$ 34.00	$ 1,240,758	
Treated Wood Ties	ea	20,233	$ 58.00	$ 1,173,514	
Tie plates	ea	40,466	$ 8.60	$ 348,008	
132lb Rail	m	24,280	$ 62.34	$ 1,513,517	
Track spikes	ea	80,932	$ 6.26	$ 506,634	
Rail anchors	ea	40,466	$ 5.90	$ 238,749	Anchor pattern: 1 tie in 2
Turnout (#10)	ea	1	$ 22,500.00	$ 22,500	Add 50% to cost for #8 turnout
Total Cost - Track on Causeway/Island				$ 5,043,681	
Unit Cost per km				415,500	

Item	Unit	Qty	Price/Rate	Total	Comments
Railway Structures					
Bridge @ STA 9+000	ea	1	$ 3,500,000.00	$ 3,500,000	Rail bridge over Pan American Highway
Culverts					
Pipe (Class 5)	ea	64	$ 23,580.58	$ 1,509,157	Assume 30m long at each location using 4 x 1.8m (72") pipe
Headwall	ea	32	$ 4,703.60	$ 150,515	Assume 1.8m (72") dia pipe
Rail Crossings	ea	7	$ 1,819.00	$ 12,733	Assume 8m-wide roadway

Total Cost - Track Laying	**$ 33,602,701**
Total Cost - Railway Structures	**$ 5,172,405**
Total Cost - Railway Construction	**$ 38,775,106**

Panama - Artificial Island Pre-feasibility Study
PRELIMINARY COST ESTIMATE FOR CHANNEL ALIGNMENT P1-B (Short Breakwater)

MATERIAL HAULAGE

General Specifications

Item	Unit	Qty	Price/Rate		Comments
Quantities					
Total Bulked Rock to be Hauled	m3	69,350,000			
Total Bulked Overburden to be Hauled	m3	18,031,000			
Special Handling (Armor Stone)					
Causeway Armor	m^3	749,700			
Revetment Armor	m^3	960,900			
Breakwater Armor	m^3	402,220			
Armor Stone Hauled by Truck	m^3	**2,112,820**			Armor stone to be trucked to placement locations
Total Bulked Material to be Hauled by Rail	m^3	**85,268,180**			Excludes armor stone, which is hauled by truck
Site/Work Specifications					
Avg. rail haulage distance (channel to island)	km	23			
Train and Shovel Operating Hours per day	hr	20			
Working Hours Per Day (Earthworking)	hr	15			
Target Daily Production	m^3	48,000			Production rate estimate - input cell
Equipment Specifications					
Rail Transport Cycle					
Rail Car Capacity	m^3	40			
Rail Cars Per Train	no.	50			
Total Train Capacity	m^3	2,000			
Train Trips Required Per Day to Meet Target	no.	24			To meet target, requires 2 tracks at unloading site
Actual Material Hauled per Day	m^3	48,000			Target estimate - arbitrary
No. of 50-car Trains Sets Required	no.	6			
Trips Per Train Per Day	no.	4.30			
Estimated Time to Completion (Rail Haul)	***days***	***1,777***			5.2 Years
Average Train Speed	km/hr	20			
Dump time per rail car	min	1.20			
Minimum Travel Time (Round Trip)	hr	2.30			
Estimated Dump Time Per Train	hr	1.00			
Time to Load a Train	hr	0.83			Based on no. rail cars x 1.2min per car
Train Movements/Delays per Train	hr	0.50			Calculation based on loading rate of 2 shovels per train
No. simultaneous trains (loading/dumping)	no.	2.00			Conservative time estimate
Total trip cycle time	***hr***	***4.63***			Indicates no. of trains needing to be unloaded or loaded simultaneously
Total Rail Cars Required	no.	300			in order to meet daily haulage target
Daily Operations Cost for 6 Locos	$/day	$ 7,800			
Daily Maintenance Cost for 6 Locos	$/day	$ 5,400			
Daily Maintenance Cost for 300 Locos	$/day	$ 22,500			
Track Maintenance					
Annual maintenance cost	km	47.44	$ 25,000.00	$ 1,186,000	
Special Material Handling (Armor Stone)					
CAT 789 Off-Road Truck (200 ton Capacity)					
Truck Capacity	m^3	105			
Estimated Unload Time	min	3.0			
Estimated Unload Time	hr	0.05			
Estimated Load Time	hr	0.088			
Estimated Travel Time	hr	2.300			Truck capacity / Shovel Production
Total Cycle Time	***hr***	***2.438***			Using round-trip distance of 46 km
Trips per Truck per Day (assuming 20 working hou	no.	8.3			
Daily Haul Per Truck	m^3	872			
Estimated Number of Trucks Required	no.	2			Arbitrary input
Total Daily Haul	m^3	14,467			
No. Days to move material	**day**	**146**			Used to calculate equpment requirements
Hourly Cost per truck	$/hr		$331.45		
Daily Cost per truck @ 24 pay hours per day	$/day		$7,954.70		Ref: Harza Estimate. Incl. Maint, O/H, Taxes, Bonds and Profit
Daily Cost for 2 truck(s)	$/day		$15,909.41		
Shovels estimated for truck loading	**no.**	**1**			
Hourly Cost per Shovel	$/hr		$592.95		
Daily Cost per shovel @ 24 pay hours per day	$day		$14,230.73		Ref: Harza Estimate. Incl. Maint, O/H, Taxes, Bonds and Profit
Daily Cost for 1 truck(s)	$day		$14,230.73		
Train Loading (Using CAT 5230 Front Shovel)					
Bucket Capacity	m^3	17			Direct loading using front shovels
Bucket Fill Factor	no.	90%			Ref: Caterpillar web site
Actual Bucket Capacity	m^3	15.3			
Bucket Cycle Time	min	0.765			
Bucket Cycle Time	hr	0.013			
Hourly Loading Rate Per Front Shovel	m3/hr	1,200			45.9 seconds per bucket load cycle
Daily Loading Rate Per Front Shovel	m3/day	18,000			Ref: Harza Estimate
Shovels Estimated per Train	**no.**	**2**			
Total Shovels Required for Train Loading	**no.**	**4**			
Hourly Cost per Shovel	$/hr		$592.95		
Daily Cost per Shovel (train loading 24 pay hours)	$day		$14,230.73		Ref: Harza Estimate. Incl. Maint, O/H, Taxes, Bonds and Profit
Daily Cost for 4 shovels (train loading 24 pay hours)	$day		$56,922.93		

Panama - Artificial Island Pre-feasibility Study
PRELIMINARY COST ESTIMATE FOR CHANNEL ALIGNMENT P1-B (Short Breakwater)

Haulage Costs

Item	Unit	Qty	Price/Rate		Comments
Rail Haulage Costs					
Front Shovels (train loading)	day	1,777	$56,922.93	$ 101,152,049	
Rail Transportation	tonne.km	3,333,985,842	$ 0.030	$ 100,019,575	** Cost comparison provided by 'Rollingstock Costs' below
Track Maintenance	year	5.15	$1,186,000.00	$ 6,108,759	
Truck Haulage Costs					
Front Shovels (Armor Stone Handling)	day	146	$14,230.73	$ 2,078,329	
Truck Transportation (Armor Stone Handling)	day	146	$15,909.41	$ 2,323,491	
Truck Haulage Roads	km	25	$200,000.00	$ 5,000,000	
Total Cost - Material Haulage				**$216,682,203**	
Unit cost of transport per m^3				**$2.48**	

**Rollingstock Costs

Item	Unit	Qty	Price/Rate		Comments
Rollingstock Purchase Costs					
Locomotives	no.	7	$ 2,200,000	$ 15,400,000	Includes one backup loco
Side-dump rail cars	no.	310	$ 120,000	$ 37,200,000	Includes 10 backup rail cars. (Compressed air operated)
Operating/Maintenance Costs					
Operational cost of locomotives	day	1777	$ 7,800	$ 13,860,600	
Maintenance cost of locomotives	day	1777	$ 5,400	$ 9,595,800	
Maintenance cost of rail cars	day	1777	$ 22,500	$ 39,982,500	
Salvage Value					
Locomotives	no.	7	$ 660,000	$ (4,620,000)	
Side-dump rail cars	no.	310	$ 48,000	$ (14,880,000)	
Total Cost - Rollingstock				**$96,538,900**	
Unit Cost per m^3 - Rollingstock only				**$1.10**	

TRESTLE CONSTRUCTION

Trestle Specifications

Item	Unit	Qty	Price/Rate	Total	Comments
Length	m	200			
Width	m	40.1			
Surface Area	m^2	8,020			

Trestle Costs

Note: Rates throughout are taken from RS Means, "get-a-quote.net", previous project data or from recent research

Item	Unit	Qty	Price/Rate	Total	Comments
Trestle Structure					
Trestle in-place	m^2	8020	$ 1,350.00	$ 10,827,000	125 $/sf based on recent bid prices for similar structure
Total Cost - Trestle				**$10,827,000**	
Unit cost of Trestle per m^2				**$1,350.00**	

BRIDGE CONSTRUCTION

Bridge Costs

Item	Unit	Qty	Price/Rate	Total	Comments
Superstructure					
Length	m	50			
Width	m	40.1			
Total Cost - Superstructure	m^2	2005	$ 1,500.00	**$3,007,500**	
Approaches					
Total Cost - MSE Wall	m^2	30140	$ 484.00	**$14,587,760**	*Optional - not included in costs*

Note: Fill costs included in causeway cost calculations

Panama - Artificial Island Pre-feasibility Study
PRELIMINARY COST ESTIMATE FOR CHANNEL ALIGNMENT P1-B (Short Breakwater)

CAUSEWAY CONSTRUCTION

Causeway Specifications

Item	Unit	Qty	Price/Rate	Total	Comments
Quantity Information					
Armor Volume	m^3	749,700			
Core Volume	m^3	5,465,242			
Rail Formation	m^3	3,333,450			Creation of rail formation at island for train unloading
Total Haul Volume	m^3	8,798,692			Armor volume excluded (costed separately)
Site/Work Specifications					
Round Trip Haul Distance	km	13.0			
Average Truck Speed	km/h	20.0			Refer Figures 8-3, 8-4
Working Hours Per Day	hr	20			
Pay Hours Per Day	hr	24			Working hours @ 75% of pay hours
Daily Production Rate	m^3	36,000			
Estimated Time to Completion	**days**	**250**			Arbitrary estimate to generate reasonable equipment requirements 0.73 Years
Equipment Specifications					
CAT 789 Off-Road Truck					
Truck Capacity	m^3	105			
Estimated Unload Time	min	3.0			Ref: Caterpillar web site
Estimated Unload Time	hr	0.05			Arbitrary estimate
Estimated Load Time	hr	0.088			
Estimated Travel Time	hr	0.650			Truck capacity / Shovel Production
Total Cycle Time	hr	0.788			
Truck Trips Per Truck per Day	no.	25.3			
Daily Haul Per Truck	m^3	2,657			
Estimated Number of Trucks Required	**no.**	**14**			
Hourly Cost per truck	$/hr		$331.45		
Daily Cost per truck @ 24 pay hours per day	$/day		$7,954.70		Ref: Harza Estimate. Incl. Maint, O/H, Taxes, Bonds and Profit
Daily Cost for 25.3 trucks	$/day		$111,365.86		
Truck Loading (Using CAT 5230 Front Shovel)					
Bucket Capacity	m^3	17			
Bucket Fill Factor	no.	90%			From Caterpillar web site Arbitrary estimate
Actual Bucket Capacity	m^3	15.3			
Bucket Cycle Time (Dig to Load)	min	0.765			
Bucket Cycle Time (Dig to Load)	hr	0.013			45.9 seconds per bucket load cycle
Hourly Production Per Front Shovel	m3/hr	1,200			Ref: Harza Estimate
Daily Production Per Front Shovel	m3/day	24,000			
Estimated Number of Front Shovels Required	**no.**	**2**			
Hourly Cost per Shovel	$/hr		$592.95		
Daily Cost per Shovel @ 24 pay hours per day	$/day		$14,230.73		Ref: Harza Estimate. Incl. Maint, O/H, Taxes, Bonds and Profit
Daily Cost for 2 shovel(s)	$/day		$28,461.47		
CAT D-9 Bulldozer					
Estimated no. required	**no.**	1			
Hourly Rate	$/hr		$213.99		
Daily Rate	$/day		$5,135.84		Ref: Harza Estimate. Incl. Maint, O/H, Taxes, Bonds and Profit
CAT 16H Grader					
Estimated no. required	**no.**	1			
Hourly Rate	$/hr		$101.20		
Daily Rate	$/day		$2,428.86		Based on Harza Estimate. Incl. Maint, O/H, Taxes, Bonds and Profit

Causeway Costs

Item	Unit	Qty	Price/Rate	Total	Comments
Core Construction					
Equipment Costs					
CAT 789 Off-Road Trucks	day	250	$111,366	$27,841,470	
CAT 5230 Front Shovels	day	250	$28,461	$7,115,370	
CAT D-9 Bulldozers	day	250	$5,136	$1,283,960	
CAT 16H Graders	day	250	$2,429	$607,220	
Total Equipment Cost				**$36,848,020**	
Armor Construction					
Placement	m^3	**749,700**	**$20**	**$14,994,000**	

Total Cost - Causeway	**$51,842,020**
Unit cost per m^3	**$8.34**

Panama - Artificial Island Pre-feasibility Study
PRELIMINARY COST ESTIMATE FOR CHANNEL ALIGNMENT P1-B (Short Breakwater)

ISLAND CONSTRUCTION

General Specifications

Earthworking at Island Site

Island Rock Fill	m^3	60,813,708		
Island Overburden Fill	m^3	18,031,000		
Equipment				
CAT D-9 Bulldozer				
Working Rate per Dozer / Hour	m3/hr	1,200		
Working Rate per Dozer / Day	m3/day	18,000		Arbitrary estimate
Estimated Bulldozers Required	no.	3		
Hourly Cost per Dozer	$/hr		$213.99	
Daily Cost per Dozer @ 20 pay hours per day			$4,279.86	Based on Harza Estimate. Incl. Maint, O/H, Taxes, Bonds and Profit
Daily Cost for 3 dozer(s)			$12,839.59	

Island Costs

Item	Unit	Qty	Price/Rate	Total	Comments
Island Fill					
Equipment Costs					
CAT D-9 Bulldozers	day	1,777	$12,839.59	$ 22,815,955	

Total Cost - Island Fill	**$22,815,955**
Unit cost per m^3	**$0.38**

ISLAND REVETMENT ARMOR

Revetment Costs

Item	Unit	Qty	Price/Rate	Total	Comments
Armor Stone Placement	m^3	960,900	$ 15.00	$ 14,413,499	

Total Cost - Island Revetment	**$14,413,499**
Unit cost per m^3	**$15.00**

BREAKWATER

Breakwater Costs

Item	Unit	Qty	Price/Rate	Total	Comments
Breakwater Construction					
Armor Placement	m^3	402,220	20	$ 8,044,400	
Core Placement	m^3	958,230	10	$ 9,582,300	

TOTAL COST - BREAKWATER	**$17,626,700**
Unit cost of breakwater per m^3	**$12.96**

Panama Artificial Island Pre-Feasibility Study

Island Volume Calculations-Channel Alignment P1-B (Short Breakwater)

Item	Quantity	Unit	Comments
Material from Channel			
Wet Overburden	1,450,000	m^3	Taken from Harza report
Dry Overburden	12,420,000	m^3	Taken from Harza report
Wet Rock	5,820,000	m^3	Taken from Harza report
Dry Rock	49,660,000	m^3	Taken from Harza report
Bulking Factors (placed:in-situ)			
Wet Overburden	1.3		Materials handbook
Dry Overburden	1.3		Materials handbook
Wet Rock	1.25		Materials handbook
Dry Rock	1.25		Materials handbook
Bulked Volumes			Used for transportation and fill calculations
Wet Overburden	1,885,000	m^3	
Dry Overburden	16,146,000	m^3	
Total Overburden	***18,031,000***	m^3	
Wet Rock	7,275,000	m^3	
Dry Rock	62,075,000	m^3	
Total Rock (Gross)	***69,350,000***	m^3	
Rock Available after Breakwater and Causeway	***61,774,608***		Ignores railway formation fill at island, which becomes part of island fill
Breakwater Calcs			
Length	910	m	Refer report Figure 9-6 for layout
Avg. Bottom Elevation (MLWS)	-16	m	Includes 3m settlement
Sectional Area - Armor	442.00	m^2	Refer report Figure 9-4 for typical geometry
Sectional Area - Core	1053.00	m^2	Refer report Figure 9-4 for typical geometry
Armor Volume	***402,220***		
Core Volume	***958,230***		
Total Volume	***1,360,450***		Volume of rock required for breakwater
Causeway Calcs			
Start STA	17420		Refer report Figure 9-6
Finish STA	21240		Refer report Figure 9-6
Length	3570	m	Total causeway length (excluding trestle and bridge)
Avg. Crest Elevation (MLWS)	12.3	m	Converted from PLD
Avg. Bottom Elevation (MLWS)	-6.5	m	Includes 3m settlement
Avg. Height	18.8	m	
Crest Width	55	m	
Avg. Base Width	130.2	m	
Sectional Area - Armor	210	m^2	
Sectional Area - Core	1530.88	m^2	
Volumes (used in cost estimates)			
Causeway Volume- Armor	***749,700***		Armor material required for causeway
Causeway Volume- Core	***5,465,242***		Core material required for causeway
Causeway Fill Volume - Total	***6,214,942***		Total material requiring transportation for causeway construction Assumed to be trucked from stockpile area
Railway Formation @ Island			Material required for railway access formation at island site -
Length	2500	m	included in causeway cost calculations
Crest Elevation (MLWS)	8.3	m	
Avg. Bottom Elevation (MLWS)	-13	m	Includes 3m settlement
Height	21.3	m	
Crest Width	20	m	Clearance for 2 tracks and side-dumping of material
Base Width	105.2	m	
Sectional Area	1333.38	m^2	
Total Formation Volume	***3,333,450***	m^3	Used for calculating truck haul requirements and costs
Island Assumptions/Criteria			
MHWS Elevation (MLWS)	5	m	
Freeboard Allowance	3.3	m	
Finished Surface Elevation (MLWS)	8.3		
Avg. Water Depth (MLWS)	-13	m	Includes 3m settlement
Avg. Island Height	21.3		
Min. Overburden Depth	4	m	
Island Revetment Geometry			
Perimeter Length	8,070	m	Based on layout as shown in report Figure 9-5
Height	21.3	m	
Side Slopes	2H:1V		
Total Sectional Area	453.69	m^2	
Sectional Area - Armor	119.07	m^2	
Sectional Area - Core	334.62	m^2	
Island Volumes			
Revetment Volume - Armor	960,900	m^3	
Revetment Volume - Core	2,700,378	m^3	
Island Rock Fill (within revetment)	58,113,330	m^3	Used to calculate island surface area (excludes revetment volumes)
Total Island Rock Fill	60,813,708	m^3	Used to calculate island construction cost (excludes revetment armor)
Bulked Overburden from Excavation	18,031,000	m^3	
Material available from railway formation	2,325,000	m^3	Assumes 75% of usable cut material
Total Overburden Available to Island	20,356,000	m^3	Used to calculate island surface area
Total Material For Island Fill	78,469,330	m^3	Excludes revetment material
Overburden required @ 4m deep	14,000,000	m^3	Check calculation to ensure minimum overburden depth achieved

Calculated Island Area	368.40	Ha
Actual Area as Designed	350.00	Ha

Panama - Artificial Island Pre-feasibility Study
PRELIMINARY COST ESTIMATE FOR CHANNEL ALIGNMENT P2-B (Short Breakwater)

Note: Rates throughout are taken from RS Means, "get-a-quote.net", previous project data or from recent research

RAIL CONSTRUCTION

Specifications

Item	Unit	Qty	Price/Rate	Total	Comments
On Formation					
Track section length	m	17,450			Distance from north end of channel to shoreline
No. tracks	ea	2			Double track
Total track length	m	34,900			
Total no. ties	ea	58,167			
Ballast volume	m^3	123,197			
Ballast mass @ 1.8 t/m^3	t	221,755			
On Trestle					
Track section length	m	200			
No. tracks	ea	2			Double track
Total track length	m	400			
Total no. ties	ea	667			
Ballast volume	m^3	668			
Ballast mass @ 1.8 t/m^3	t	1,202			
On Causeway/Island					
Track section length	m	5,575			Includes causeway + 5000m for track on island
No. tracks	ea	2			Double track
Total track length	m	11,150			
Total no. ties	ea	18,583			
Ballast volume	m^3	18,621			
Ballast mass @ 1.8 t/m^3	t	33,517			

Railway Costs

Note: rates taken from "get-a-quote.net" where applicable or other project data

Item	Unit	Qty	Price/Rate	Total	Comments
Track Laying on Formation					
Survey	Ha	349	$ 2,000.00	$ 698,000	200m Corridor to shoreline, guesstimate
Boreholes	ea	20	$ 2,400.00	$ 48,000	Assuming each 20m deep @ $120 per metre ($35 per foot)
Clearing and Stripping	Ha	52.35	$ 14,820.00	$ 775,827	Assume $6000 per Acre
Formation Earthworks	m^3	7,540,000	$ 1.10	$ 8,284,038	Total of Cut + Fill Volumes
Ballast	t	221,755	$ 34.00	$ 7,539,656	
Treated Wood Ties	ea	58,167	$ 58.00	$ 3,373,667	
Tie plates	ea	116,334	$ 8.60	$ 1,000,472	
132lb Rail	m	69,800	$ 62.34	$ 4,351,050	
Track spikes	ea	232,667	$ 6.26	$ 1,456,493	
Rail anchors	ea	116,333	$ 5.90	$ 686,367	Anchor pattern: 1 tie in 2
Turnout (#10)	ea	8	$ 22,500.00	$ 180,000	Add 50% to cost for #8 turnout
Total Cost - Track on Formation				$ 28,393,571	
Unit Cost per km				813,600	
Track Laying on Trestle					
Ballast	t	1,202	$ 34.00	$ 40,882	
Treated Wood Ties	ea	667	$ 58.00	$ 38,667	
Tie plates	ea	1,334	$ 8.60	$ 11,472	
132lb Rail	m	800	$ 62.34	$ 49,869	
Track spikes	ea	2,667	$ 6.26	$ 16,693	
Rail anchors	ea	1,333	$ 5.90	$ 7,867	Anchor pattern: 1 tie in 2
Total Cost - Track on Trestle				$ 165,449	
Unit Cost per km				413,700	
Track Laying on Causeway/Island					
Ballast	t	33,517	$ 34.00	$ 1,139,576	
Treated Wood Ties	ea	18,583	$ 58.00	$ 1,077,814	
Tie plates	ea	37,166	$ 8.60	$ 319,628	
132lb Rail	m	22,300	$ 62.34	$ 1,390,092	
Track spikes	ea	74,332	$ 6.26	$ 465,318	
Rail anchors	ea	37,166	$ 5.90	$ 219,279	Anchor pattern: 1 tie in 2
Turnout (#10)	ea	1	$ 22,500.00	$ 22,500	Add 50% to cost for #8 turnout
Total Cost - Track on Causeway/Island				$ 4,634,207	
Unit Cost per km				415,700	

Item	Unit	Qty	Price/Rate	Total	Comments
Track Structures					
Bridge @ STA 9+000	ea	1	$ 3,500,000.00	$ 3,500,000	Rail bridge over Pan American Highway
Culverts					
Pipe (Class 5)	ea	64	$ 23,580.58	$ 1,509,157	4 x 1.8m (72") pipe @ each of 16 locations
Headwall	ea	32	$ 4,703.60	$ 150,515	Assume 1.8m (72") dia pipe
Rail Crossings	ea	7	$ 1,819.00	$ 12,733	Assume 8m-wide roadway

Total Cost - Track Laying	**$ 33,193,228**
Total Cost - Railway Structures	**$ 5,172,405**
Total Cost - Railway Construction	**$ 38,365,633**

Panama - Artificial Island Pre-feasibility Study
PRELIMINARY COST ESTIMATE FOR CHANNEL ALIGNMENT P2-B (Short Breakwater)

MATERIAL HAULAGE

General Specifications

Item	Unit	Qty	Price/Rate	Total	Comments
Quantities					
Total Bulked Rock to be Hauled	m3	37,412,500			
Total Bulked Overburden to be Hauled	m3	6,120,000			
Special Handling (Armor Stone)					
Causeway Armor	m^3	813,750			
Revetment Armor	m^3	619,167			
Breakwater Armor	m^3	389,480			
Armor Stone Volume by Truck	m^3	**1,822,397**			Armor stone to be trucked to placement locations
Total Material Volume to be Hauled by Rail	m^3	**41,710,103**			Excludes armor stone, which is hauled by truck
Site/Work Specifications					
Rail transport haulage distance (channel to island)	km	23			
Train Operating Hours Per Day	hr	20			
Working Hours Per Day (Earthworking)	hr	15			
Target Daily Production	m^3	48,000			Production rate estimate -input cell
Equipment Specifications					
Rail Transport Cycle					
Rail Car Capacity	m^3	40			
Rail Cars Per Train	no.	50			
Total Train Capacity	m^3	2,000			
Train Trips Required Per Day to Meet Target	no.	24			To meet target, requires 2 tracks at unloading site
Actual Material Hauled per Day	m^3	48,000			Target estimate - arbitrary
Estimated no. of 50-car Trains Required	no.	6			
Trips Per Train Per Day	no.	4.30			
Estimated Time to Completion (Rail Haul)	***days***	***869***			2.6 years
Average Train Speed	km/hr	20			
Dump Time Per Rail Car	min	1.20			Conservative allowance
Minimum Travel Time (Round Trip)	hr	2.30			
Estimated Dump Time Per Train	hr	1.00			
Time to Load a Train	hr	0.83			Based on no. rail cars x 1.2min per car
Train Movements/Delays	hr	0.50			Calculation based on loading rate of 2 shovels per train
No. simultaneous trains (loading/dumping)	no.	2.00			Conservative time estimate
Total trip cycle time	***hr***	***4.63***			Indicates no. of trains needing to be unloaded or loaded simultaneously
Total Rail Cars Required	no.	300			in order to meet daily haulage target
Daily Operations Cost for 6 Locos	$/day	7,800			
Daily Maintenance Cost for 6 Locos	$/day	5,400			
Daily Maintenance Cost for 300 Locos	$/day	22,500			
Track Maintenance					
Annual maintenance cost	km	46.45	$ 25,000.00	$ 1,161,250	Based on figures from 1993/94 Westrail data
Special Material Handling (Armor Stone)					
CAT 789 Off-Road Truck (200 ton Capacity)					
Truck Capacity	m^3	105			
Estimated Unload Time	min	3.0			
Estimated Unload Time	hr	0.05			
Estimated Load Time	hr	0.088			
Estimated Travel Time	hr	2.300			Truck capacity / Shovel Production
Total Cycle Time	***hr***	***2.438***			Using round-trip distance of 46 km
Trips per Truck per Day (assuming 20 working hours	no.	8.3			
Daily Haul Per Truck	m^3	872			
Estimated Number of Trucks Required	no.	2			Arbitrary input
Total Daily Haul	m^3	14,467			
No. Days to move material	**day**	**126**			Used to calculate equpment requirements
Hourly Cost per truck	$/hr		$331.45		Based on Harza Estimate. Incl. Maint, O/H, Taxes, Bonds and Profit
Daily Cost per truck @ 24 pay hours per day	$/day		$7,954.70		
Daily Cost for 2 truck(s)	$/day		$15,909.41		
Shovels estimated for truck loading	**no.**	**1**			
Hourly Cost per Shovel	$/hr		$592.95		Based on Harza Estimate. Incl. Maint, O/H, Taxes, Bonds and Profit
Daily Cost per shovel @ 24 pay hours per day	$/day		$14,230.73		
Daily Cost for 1 truck(s)	$/day		$14,230.73		
Train Loading (Using CAT 5230 Front Shovel)					
Bucket Capacity	m^3	17			Direct loading using front shovels
Bucket Fill Factor	no.	90%			Ref: Caterpillar web site
Actual Bucket Capacity	m^3	15.3			
Bucket Cycle Time	min	0.765			
Bucket Cycle Time	hr	0.013			
Loading Rate Per Front Shovel	m3/hr	1,200			45.9 seconds per bucket load cycle
Hourly Loading Rate Per Front Shovel	m3/day	18,000			based on Harza estimates
Total Shovels Required for Train Loading	**no.**	**2**			
Total Shovels Required for Train Loading	**no.**	**4**			
Hourly Cost per Shovel	$/hr		$592.95		Ref: Harza Estimate. Incl. Maint, O/H, Taxes, Bonds and Profit
Daily Cost per Shovel (train loading 24 pay hours)	$/day		$14,230.73		
Daily Cost for 2 shovels (train loading 24 pay hours)	$/day		$28,461.47		

Haulage Costs

Panama - Artificial Island Pre-feasibility Study
PRELIMINARY COST ESTIMATE FOR CHANNEL ALIGNMENT P2-B (Short Breakwater)

Item	Unit	Qty	Price/Rate	Total	Comments
Rail Haulage Costs					
Front Shovels (train loading)	day	869	$ 28,461.47	$ 24,733,014	
Rail Transportation	tonne.km	1,534,931,782	$ 0.042	$ 64,467,135	** Cost comparison provided by 'Rollingstock Costs' below
Track Maintenance	year	2.52	$ 1,161,250	$ 2,925,004	
Truck Haulage Costs					
Front Shovels (truck loading)	day	126	$ 14,230.73	$ 1,792,647	
Truck Transportation (Armor Stone Handling)	day	126	$ 15,909.41	$ 2,004,110	
Truck Haulage Roads	km	25	$ 200,000	$ 5,000,000	

Total Cost - Material Haulage	**$102,083,159**
Unit cost of transport per m^3	**$2.34**

*****Rollingstock Costs***

Item	Unit	Qty	Price/Rate	Total	Comments
Rollingstock Purchase Costs					
Locomotives	no.	7	$ 2,200,000	$ 15,400,000	Includes one backup loco
Side-dump rail cars	no.	310	$ 120,000.00	$ 37,200,000	Includes 10 backup rail cars. (Compressed air operated)
Operating/Maintenance Costs					
Operational cost of locomotives	day	869	$ 7,800.00	$ 6,778,200	
Maintenance cost of locomotives	day	869	$ 5,400.00	$ 4,692,600	
Maintenance cost of rail cars	day	869	$ 22,500.00	$ 19,552,500	
Salvage Value					
Locomotives	no.	7	$ (660,000.00)	$ (4,620,000)	
Side-dump rail cars	no.	310	$ (48,000.00)	$ (14,880,000)	

Total Cost - Rollingstock	**$64,123,300**
Unit Cost per m^3	**$1.54**

TRESTLE CONSTRUCTION

Specifications

Item	Unit	Qty	Price/Rate	Total	Comments
Length	m	200			
Width	m	40.1			
Surface Area	m^2	8,020			

Trestle Costs

Item	Unit	Qty	Price/Rate	Total	Comments
Trestle Structure					
Trestle in-place	m^2	8,020	$ 1,350.00	$ 10,827,000	125 $/sf based on recent bid prices for similar structure

Total Cost - Trestle	**$10,827,000**
Unit cost of Trestle per m^2	**$1,350.00**

BRIDGE CONSTRUCTION

Bridge Costs

Item	Unit	Qty	Price/Rate	Total	Comments
Superstructure					
Length	m	50			
Width	m	40.1			
Total Cost - Superstructure	m^2	2005	$ 1,500	**$3,007,500**	
Approaches					
Total Cost - MSE Wall	m^2	30140	$ 484.00	**$14,587,760**	*Optional - not included in costs*
Note: Fill costs included in causeway cost calculations					

Panama - Artificial Island Pre-feasibility Study
PRELIMINARY COST ESTIMATE FOR CHANNEL ALIGNMENT P2-B (Short Breakwater)

CAUSEWAY CONSTRUCTION

Causeway Specifications

Item	Unit	Qty	Price/Rate	Total	Comments
Quantity Information					
Armor Volume	m^3	813,750			
Core Volume	m^3	5,932,160			
Rail Formation	m^3	3,333,450			Creation of rail formation at island for train unloading
Total Haul Volume	m^3	9,265,610			Armor volume excluded (costed separately)
Site/Work Specifications					
Round Trip Haul Distance	km	13.6			
Average Truck Speed	km/h	20.0			Refer Figures 8-3, 8-4
Working Hours Per Day	hr	20			
Pay Hours Per Day	hr	24			Working hours @ 75% of pay hours
Daily Production Target	m^3	36,000			
Estimated Time to Completion	days	260			Arbitrary estimate to generate reasonable equipment requirements 0.76 Years
Equipment Specifications					
CAT 789 Off-Road Truck					
Truck Capacity	m^3	105			
Estimated Unload Time	min	3.0			Ref: Caterpillar web site
Estimated Unload Time	hr	0.05			Arbitrary estimate
Estimated Load Time	hr	0.088			
Estimated Travel Time	hr	0.680			Truck capacity / Shovel Production
Total Cycle Time	hr	0.818			
Truck Trips Per Day	no.	24			
Daily Haul Per Truck	m^3	2,520			
Estimated Number of Trucks Required	no.	15			
Hourly Cost per truck	$/hr		$331.45		
Daily Cost per truck @ 24 pay hours per day	$/day		$7,954.70		Ref: Harza Estimate. Incl. Maint, O/H, Taxes, Bonds and Profit
Daily Cost for 24 trucks	$/day		$119,320.56		
Truck Loading (Using CAT 5230 Front Shovel)					
Bucket Capacity	m^3	17			
Bucket Fill Factor	no.	90%			From Caterpillar web site
Actual Bucket Capacity	m^3	15.3			Arbitrary estimate
Bucket Cycle Time (Dig to Load)	min	0.765			
Bucket Cycle Time (Dig to Load)	hr	0.013			
Hourly Production Per Front Shovel	m^3	1,200			45.9 seconds per bucket load cycle
Daily Production Per Front Shovel	m^3	24,000			Based on Harza data, which is considered reasonable
Estimated Number of Front Shovels Required	no.	2			
Hourly Cost per Shovel	$/hr		$592.95		
#NAME?	$/day		$14,230.73		Ref: Harza Estimate. Incl. Maint, O/H, Taxes, Bonds and Profit
Daily Cost for 2 shovel(s)	$/day		$28,461.47		
CAT D-9 Bulldozer					
Estimated no. dozers required	no.	1			
Hourly Rate	$/hr		$213.99		
Daily Rate	$/day		$5,135.84		Ref: Harza Estimate. Incl. Maint, O/H, Taxes, Bonds and Profit
CAT 16H Grader					
Estimated no. graders required	no.	1			
Hourly Rate	$/hr		$101.20		
Daily Rate	$/day		$2,428.86		Ref: Harza Estimate. Incl. Maint, O/H, Taxes, Bonds and Profit

Causeway Costs

Item	Unit	Qty	Price/Rate	Total	Comments
Core Construction					
Equipment Costs					
CAT 789 Off-Road Trucks	day	260	$119,321	$31,023,350	
CAT 5230 Front Shovels	day	260	$28,461	$7,399,990	
CAT D-9 Bulldozers	day	260	$5,136	$1,335,320	
CAT 16H Graders	day	260	$2,429	$631,510	
Total Equipment Cost				**$40,390,170**	
Armor Construction					
Placement	m3	813,750	$20	$16,275,000	

Total Earthworking Cost - Causeway	$56,665,170
Unit cost per m^3	$8.40

Panama - Artificial Island Pre-feasibility Study
PRELIMINARY COST ESTIMATE FOR CHANNEL ALIGNMENT P2-B (Short Breakwater)

ISLAND CONSTRUCTION

General Specifications

Item	Unit	Qty	Price/Rate	Total	Comments
Earthworking at Site					
Island Rock Fill	m3	28,792,533			
Island Overburden Fill	m3	6,120,000			
Equipment					
CAT D-9 Bulldozer					
Working Rate per Dozer / Hour	m3/hr	1,200			
Working Rate per Dozer / Day	m3/day	18,000			Arbitrary estimate
Estimated Bulldozers Required		3			
Hourly Cost per Dozer	$/hr		$213.99		
Daily Cost per Dozer @ 20 pay hours per day	$/day		$4,279.86		Ref: Harza Estimate. Incl. Maint, O/H, Taxes, Bonds and Profit
Daily Cost for 3 dozer(s)			$12,839.59		

Island Costs

Item	Unit	Qty	Price/Rate	Total	Comments
Island Fill					
Equipment Costs					
CAT D-9 Bulldozers	day	869	$ 12,839.59	$ 11,157,605	

Total Cost - Island Fill	$11,157,605
Unit cost per m^3	$0.39

ISLAND REVETMENT ARMOR

Revetment Costs

Item	Unit	Qty	Price/Rate	Total	Comments
Placement	m^3	619,167	$ 15.00	$ 9,287,508	

Total Cost - Island Revetment	$9,287,508
Unit cost per m^3	$15.00

BREAKWATER

Breakwater Costs

Item	Unit	Qty	Price/Rate	Total	Comments
Breakwater Construction					
Armor Placement	m^3	389,480	20	$ 7,789,600	
Core Placement	m^3	865,410	10	$ 8,654,100	

TOTAL COST - BREAKWATER	$ 16,443,700
Unit cost of breakwater per m^3	13.10

CENTRO DE RECURSOS TECNICOS
AUTORIDAD DEL CANAL DE PANAMA

Panama Artificial Island Pre-Feasibility Study

Island Volume Calculations-Channel Alignment P2-B (Short Breakwater)

Item	Quantity	Unit	Comments
Material from Channel			
Wet Overburden	2,050,000	m^3	Taken from Harza report
Dry Overburden	5,430,000	m^3	Taken from Harza report
Wet Rock	8,200,000	m^3	Taken from Harza report
Dry Rock	21,730,000	m^3	Taken from Harza report
Bulking Factors (placed:in-situ)			
Wet Overburden	1.3		Materials handbook
Dry Overburden	1.3		Materials handbook
Wet Rock	1.25		Materials handbook
Dry Rock	1.25		Materials handbook
Bulked Excavation Volumes			Used for transportation and fill calculations
Wet Overburden	2,665,000	m^3	
Dry Overburden	7,059,000	m^3	
Total Overburden	***9,724,000***	m^3	
Wet Rock	10,250,000	m^3	
Dry Rock	27,162,500	m^3	
Total Rock (Gross)	***37,412,500***	m^3	
Rock Available after Breakwater and Causeway	***29,411,700***		Ignores railway formation fill at island, which becomes part of island fill
Breakwater Calcs			
Length	910	m	As shown in respective report Figure 9-7
Avg. Bottom Elevation (MLWS)	-14.75	m	Includes 3m settlement
Sectional Area - Armor	428.0	m^2	Refer report Figure 9-4 for typical geometry
Sectional Area - Core	951.0	m^2	Refer report Figure 9-4 for typical geometry
Armor Volume	***389,480***		
Core Volume	***865,410***		
Breakwater Volume	***1,254,890***		Volume of rock required for breakwater
Causeway Calcs			
Start STA	17420		Refer report Figure 9-8
Finish STA	21545		Refer report Figure 9-8
Length	3875	m	Total causeway length (excluding trestle and bridge)
Crest Elevation (MLWS)	12.3	m	Converted from PLD
Avg. Bottom Elevation (MLWS)	-6.5	m	Includes 3m settlement
Height	18.8	m	
Crest Width	55	m	
Base Width	130.2	m	
Sectional Area - Armor	210		
Sectional Area - Core	1530.88	m^2	
Volumes (used in cost estimates)			
Causeway Volume- Armor	***813,750***	m3	Armor material required for causeway
Causeway Volume- Core	***5,932,160***	m3	Core material required for causeway
Causeway Volume - Total	***6,745,910***	m3	Total material requiring transportation for causeway construction Assumed to be trucked from stockpile area
Railway Formation @ Island			Material required for railway access formation at island site -
Length	2500	m	included in causeway cost calculations
Crest Elevation (MLWS)	8.3	m	
Avg. Bottom Elevation (MLWS)	-13	m	Includes 3m settlement
Height	21.3	m	
Crest Width	20	m	Clearance for 2 tracks and side-dumping of material
Base Width	105.2	m	
Sectional Area	1333.38	m^2	
Total Formation Volume	***3,333,450***	m^3	Used for calculating truck haul requirements and costs
Island Assumptions/Criteria			
MHWS Elevation (MLWS)	5	m	
Freeboard Allowance	3.3	m	
Finished Surface Elevation (MLWS)	8.3		
Avg. Water Depth (MLWS)	-13	m	Includes 3m settlement
Avg. Island Height	21.3		
Min. Overburden Depth	4	m	
Island Revetment Geometry			
Perimeter Length	5,200	m	Based on layout as shown in report Figure 9-7
Height	21.3	m	
Side Slopes	2H:1V		
1/2 Dike Sectional Area	453.69	m^2	
Sectional Area - Armor	119.07	m^2	
Sectional Area - Core	334.62	m^2	
Island Volumes			
Revetment Volume - Armor	619,167	m^3	
Revetment Volume - Core	1,740,021	m^3	
Island Rock Fill (within revetment)	27,052,512	m^3	Used to calculate island surface area (excludes revetment volumes)
Total Island Rock Fill	28,792,533	m^3	Used to calculate island construction cost (excludes revetment armor)
Bulked Overburden from Excavation	9,724,000	m^3	
Material available from railway formation	2,325,000	m^3	Assumes 75% of usable cut material
Total Overburden Available to Island	12,049,000	m^3	Used to calculate island surface area
Total Material For Island Fill	39,101,512	m^3	Excludes revetment material
Overburden required @ 4m deep	6,120,000	m^3	

Calculated Island Area	183.58	Ha
Actual Area as Designed	153.00	Ha

Panama Artificial Island Pre-Feasibility Study
Alternatives P1-B and P2-B (Short Breakwater)

Table of Standard Input Values

Item	Unit	Total	Comments
Railway Information			
Formation Length	m	17450	
No. main-line tracks	no.	2	
Formation cut volume	m3	5320000	Calculated using digital terrain model
Formation fill volume	m3	2220000	Calculated using digital terrain model
Width at Base of Formation	m	30	
Ballast Depth (from top of tie to formation)	m	0.6	
Ballast Width	m	6	
Spacing of ties	m	0.6	
Wood tie dimensions			
width	m	0.2	
depth	m	0.15	
length	m	2.6	
volume	m3	0.078	
Annual Maintenance	$/year/km	$ 25,000	Factored from 1993/94 Westrail data
Equipment Specifications			
CAT 789 Off-Road Truck (105m^3 Capacity)			
Hourly Rate	$/hr	$ 331.45	
Load Capacity	m3	105.00	
Average Speed	km/h	20	
CAT 5230 Front Shovel (17m^3 bucket)			
Hourly Rate	$/hr	$ 592.95	
Single Bucket Capacity	m3	17.00	
Hourly Dig/Load Production Rate	m3/hr	1,200.00	
CAT D-9 Bulldozer			
Hourly Rate	$/hr	$ 213.99	
Hourly Production	m3/hr	1,000	
CAT 16H Grader			
Hourly Rate	$/hr	$ 101.20	
General			
(Shovel) Pay Hours	hr	24	
(Train) Loading Hours	hr	20	
Pay Hours	hr	20	
Daily Working Hours (Factored @ 75%)	hr	15	
Rail Haul			
One-way Haul Distance	km	23	
Daily Target (loading)	m3	48000	Applies to island earthworking also
Average Train Speed	km/h	20	
Rail Car Capacity	m3	40	
Rail Cars per Unit Train	no.	50	
Train Set Capacity	m3	2000	
Locomotive - Purchase Cost	ea	$ 2,200,000	Research results
Locomotive - Salvage Value (@ 40%)	ea	$ 660,000	Research results
Side-dump rail car - Purchase Cost	ea	$ 120,000	Research results
Side-dump rail car - Salvage Value (@ 40%)	ea	$ 48,000	Research results
Locomotive operational cost	$/day/unit	$ 1,300	Research results
Locomotive maintenance cost	$/day/unit	$ 900	Research results
Rail car maintenance cost	$/day/unit	$ 75	Research results
Causeway Construction			
Round Trip Haul Distance (P1)	km	13	
Round Trip Haul Distance (P2)	km	13.6	
Daily Production Target	m3	36000	

D5 - Infrastructure Costs Phases 1, 2 and 3 – P1 and P2 Locks Alternatives

Summary of Phased infrastructure costs - P1 and P2 options

P1 Locks Alternative

Infrastructure Costs	Phase 1	Phase 2	Phase 3	Total
Mobilization & Demob	750,000	500,000	500,000	$1,750,000
Dredging	39,546,958	15,477,772	27,409,246	$82,433,976
Roads and Paved Areas	3,976,875	843,750	562,500	$5,383,125
Utilities	21,000,000	1,500,000	2,650,000	$25,150,000
Public Access Areas	4,312,500	187,500	150,000	$4,650,000
Security and Fencing	657,500	657,500	243,750	$1,558,750
Engineering & Const. Admin	3,512,192	1,120,826	1,575,775	$6,208,793
Contingencies	14,751,205	4,707,470	6,618,254	$26,076,929
Total Cost	**$88,507,230**	**$24,994,818**	**$39,709,525**	**$153,211,572**

P2 Locks Alternative

Infrastructure Costs	Phase 1	Phase 2	Phase 3	Total
Mobilization & Demob	750,000	500,000	500,000	$1,750,000
Dredging	39,546,958	15,477,772	20,600,000	$75,624,730
Roads and Paved Areas	3,058,875	281,250	225,000	$3,565,125
Utilities	18,700,000	3,700,000	1,950,000	$24,350,000
Public Access Areas	2,975,000	90,000	45,000	$3,110,000
Security and Fencing	472,500	252,500	122,750	$847,750
Engineering & Const. Admin	3,275,167	1,015,076	1,172,138	$5,462,380
Contingencies	13,755,700	4,263,320	4,922,978	$22,941,997
Total Cost	**$82,534,200**	**$25,579,918**	**$29,537,865**	**$137,651,982**

Phase 1 Infrastructure Development Costs- P1 Option

Description	Quantity	Unit	Unit Rate (US$)	Amount (US$)
Mobilization & Demob	1	ls	750,000	**$750,000**
Dredging (16.75 m x 225m channel)				**$39,546,958**
Dredging in soft material /1	5,723,479	m3	2.00	$11,446,958
Dredging in Weathered Rock /2	1,250,000	m3	12.00	$15,000,000
Dredging in Dense Rock /2	500,000	m3	25.00	$12,500,000
Demurrage /3	30	days	20,000	$600,000
Roads and Paved Areas				**$3,976,875**
Completion of Access road on Causeway	89,250	m2	22.50	$2,008,125
Spine Access roads within Island	87,500	m3	22.50	$1,968,750
Utilities				**$21,000,000**
Primary Electrical Supply & Back up	1	LS	6,500,000	$6,500,000
Lighting to main roads and accesses	1	LS	1,750,000	$1,750,000
Extension of Potable Water	1	LS	2,500,000	$2,500,000
Fire water Systems	1	LS	4,850,000	$4,850,000
Sanitary Sewage and Treatment System	1	LS	2,650,000	$2,650,000
Telephone & Communications	1	LS	2,750,000	$2,750,000
Public Access Areas				**$4,312,500**
Parks, View Point, Parking	187,500	m2	20.00	$3,750,000
General Landscaping	37,500	m2	15.00	$562,500
Security and Fencing				**$657,500**
Fencing	4,500	m	35.00	$157,500
Control Stations & CC systems	1	ls	500,000	$500,000
Total - Civil Works				**$70,243,833**
Engineering & Const. Admin.			5.00%	**$3,512,192**
Contingencies			20.00%	**$14,751,205**
Estimated Cost (Phase 1)				**$88,507,230**

Phase 2 _ P1 Option

Description	Quantity	Unit	Unit Rate (US$)	Amount (US$)
Mobilization & Demob	1	ls	500,000	**$500,000**
Dredging (Extend basin area)				**$15,477,772**
Dredging in soft material /1	1,138,886	m3	2.00	$2,277,772
Dredging in Weathered Rock /2	650,000	m3	12.00	$7,800,000
Dredging in Dense Rock /2	200,000	m3	25.00	$5,000,000
Demurrage /3	20	days	20,000	$400,000
Roads and Paved Areas				**$843,750**
Spine Access roads within Island	37,500	m3	22.50	$843,750
Utilities				**$4,750,000**
Extend Electrical Network	1	LS	1,500,000	$1,500,000
Extend Lighting	1	LS	650,000	$650,000
Extension of Potable Water	1	LS	800,000	$800,000
Fire water Systems	1	LS	800,000	$800,000
Sanitary Sewage and Treatment System	1	LS	500,000	$500,000
Telephone & Communications	1	LS	500,000	$500,000
Public Access Areas				**$187,500**
General Landscaping	12,500	m2	15.00	$187,500
Security and Fencing				**$657,500**
Fencing	4,500	m	35.00	$157,500
Control Stations & CC systems	1	ls	500,000	$500,000
Total - Civil Works				**$22,416,522**
Engineering & Const. Admin.			5.00%	**$1,120,826**
Contingencies			20.00%	**$4,707,470**
Estimated Cost (Phase 2)				**$28,244,818**

Phase 3 - P1 Option

Description	Quantity	Unit	Unit Rate (US$)	Amount (US$)
Mobilization & Demob	1	ls	500,000	**$500,000**
Dredging (Extend basin area)				**$27,409,246**
Dredging in soft material /1	4,654,623	m3	2.00	$9,309,246
Dredging in Weathered Rock /2	850,000	m3	12.00	$10,200,000
Dredging in Dense Rock /2	300,000	m3	25.00	$7,500,000
Demurrage /3	20	days	20,000	$400,000
Roads and Paved Areas				**$562,500**
Spine Access roads within Island	25,000	m3	22.50	$562,500
Utilities				**$2,650,000**
Extend Electrical Network	1	LS	650,000	$650,000
Extend Lighting	1	LS	450,000	$450,000
Extension of Potable Water	1	LS	600,000	$600,000
Fire water Systems	1	LS	400,000	$400,000
Sanitary Sewage and Treatment System	1	LS	300,000	$300,000
Telephone & Communications	1	LS	250,000	$250,000
Public Access Areas				**$150,000**
General Landscaping	10,000	m2	15.00	$150,000
Security and Fencing				**$243,750**
Fencing	1,250	m	35.00	$43,750
Control Stations & CC systems	1	ls	200,000	$200,000
Total - Civil Works				**$31,515,496**
Engineering & Const. Admin.			5.00%	**$1,575,775**
Contingencies			20.00%	**$6,618,254**
Estimated Cost (Phase 3)				**$39,709,525**

Phase 1 Infrastructure Development Costs -P2 Option

Description	Quantity	Unit	Unit Rate (US$)	Amount (US$)
Mobilization & Demob	1	ls	750,000	**$750,000**
Dredging (16.75 m x 225m channel)				**$39,546,958**
Dredging in soft material /1	5,723,479	m3	2.00	$11,446,958
Dredging in Weathered Rock /2	1,250,000	m3	12.00	$15,000,000
Dredging in Dense Rock /2	500,000	m3	25.00	$12,500,000
Demurrage /3	30	days	20,000	$600,000
Roads and Paved Areas				**$3,058,875**
Completion of Access road on Causeway	89,250	m2	22.50	$2,008,125
Spine Access roads within Island	46,700	m3	22.50	$1,050,750
Utilities				**$18,700,000**
Primary Electrical Supply & Back up	1	LS	6,250,000	$6,250,000
Lighting to main roads and accesses	1	LS	1,350,000	$1,350,000
Extension of Potable Water	1	LS	2,200,000	$2,200,000
Fire water Systems	1	LS	4,350,000	$4,350,000
Sanitary Sewage and Treatment System	1	LS	2,250,000	$2,250,000
Telephone & Communications	1	LS	2,300,000	$2,300,000
Public Access Areas				**$2,975,000**
Parks, View Point, Parking	130,000	m2	20.00	$2,600,000
General Landscaping	25,000	m2	15.00	$375,000
Security and Fencing				**$472,500**
Fencing	3,500	m	35.00	$122,500
Control Stations & CC systems	1	ls	350,000	$350,000
Total - Civil Works				**$65,503,333**
Engineering & Const. Admin.			5.00%	**$3,275,167**
Contingencies			20.00%	**$13,755,700**
Estimated Cost (Phase 1)				**$82,534,200**

Phase 2 _ P2 Option

Description	Quantity	Unit	Unit Rate (US$)	Amount (US$)
Mobilization & Demob	1	ls	500,000	**$500,000**
Dredging (Extend basin area)				**$15,477,772**
Dredging in soft material /1	1,138,886	m3	2.00	$2,277,772
Dredging in Weathered Rock /2	650,000	m3	12.00	$7,800,000
Dredging in Dense Rock /2	200,000	m3	25.00	$5,000,000
Demurrage /3	20	days	20,000	$400,000
Roads and Paved Areas				**$281,250**
Spine Access roads within Island	12,500	m3	22.50	$281,250
Utilities				**$3,700,000**
Extend Electrical Network	1	LS	450,000	$450,000
Extend Lighting	1	LS	650,000	$650,000
Extension of Potable Water	1	LS	800,000	$800,000
Fire water Systems	1	LS	800,000	$800,000
Sanitary Sewage and Treatment System	1	LS	500,000	$500,000
Telephone & Communications	1	LS	500,000	$500,000
Public Access Areas				**$90,000**
General Landscaping	6,000	m2	15.00	$90,000
Security and Fencing				**$252,500**
Fencing	1,500	m	35.00	$52,500
Control Stations & CC systems	1	ls	200,000	$200,000
Total - Civil Works				**$20,301,522**
Engineering & Const. Admin.			5.00%	**$1,015,076**
Contingencies			20.00%	**$4,263,320**
Estimated Cost (Phase 2)				**$25,579,918**

Phase 3 - P2 Option

Description	Quantity	Unit	Unit Rate (US$)	Amount (US$)
Mobilization & Demob	1	ls	500,000	**$500,000**
Dredging (Extend basin area)				**$20,600,000**
Dredging in soft material /1	2,450,000	m3	2.00	$4,900,000
Dredging in Weathered Rock /2	650,000	m3	12.00	$7,800,000
Dredging in Dense Rock /2	300,000	m3	25.00	$7,500,000
Demurrage /3	20	days	20,000	$400,000
Roads and Paved Areas				**$225,000**
Spine Access roads within Island	10,000	m3	22.50	$225,000
Utilities				**$1,950,000**
Extend Electrical Network	1	LS	500,000	$500,000
Extend Lighting	1	LS	250,000	$250,000
Extension of Potable Water	1	LS	300,000	$300,000
Fire water Systems	1	LS	350,000	$350,000
Sanitary Sewage and Treatment System	1	LS	300,000	$300,000
Telephone & Communications	1	LS	250,000	$250,000
Public Access Areas				**$45,000**
General Landscaping	3,000	m2	15.00	$45,000
Security and Fencing				**$122,750**
Fencing	650	m	35.00	$22,750
Control Stations & CC systems	1	ls	100,000	$100,000
Total - Civil Works				**$23,442,750**
Engineering & Const. Admin.			5.00%	**$1,172,138**
Contingencies			20.00%	**$4,922,978**
Estimated Cost (Phase 3)				**$29,537,865**

D6 - Container Terminal Module – Cost Estimate

Estimated Cost - Container Terminal module

Item	Units	Unit Price	Quantity	Cost
Mobilization	LS	5,000,000	1	***$5,000,000***
Site Work				***$21,788,000***
Top filling over reclaimed area	m3	25.00	150,000	$3,750,000
Grading	m2	9.00	150,000	$1,350,000
Stormwater Drainage	m2	8.00	150,000	$1,200,000
Water - Potable/Fire	ha	25,000	30	$750,000
Sanitary Sewer	ha	15,000	30	$450,000
Electrical/Lighting/Communications	ha	100,000	30	$3,000,000
Paving (terminal & IY)	ha	325,000	30	$9,750,000
Intermodal Yard Trackage	m	550	2,200	$1,210,000
Rip-Rap (place only)	m3	15.00	10,500	$157,500
Fencing	m	110	1,550	$170,500
Entrance Complex				***$1,120,000***
Precheck Lanes	Lanes	75,000	8	$600,000
Gate Processing	Lanes	65,000	8	$520,000
Buildings				***$4,437,500***
Maintenance Building	m2	1,250	2,500	$3,125,000
Operations Bldg	m2	1,750	750	$1,312,500
Marine Structures				***$47,850,000***
Crane Rails	m	2,250	1,700	$3,825,000
Berth & Piles	m2	1,250	29,750	$37,187,500
Transition Slab	m2	1,000	2,550	$2,550,000
Rip rap protection below berth	m3	25.00	25,500	$637,500
Fender system	each	20,000	170	$3,400,000
Hardware, lighting and misc items	ls	250,000	1	$250,000
Gantry Cranes	each	5,000,000	8	**$40,000,000**
SUBTOTAL				**$120,195,500**
Engineering & Const. Admin. /1			6%	**$4,811,730**
Contingency			20%	**$24,039,100**
Total Estimated Cost /2				**$149,046,330**

/1 - Does not apply to cranes
/2 - Excludes Yard Equipment and IT systems

D7 - Truck Haul Model and Cost Estimate – ACP designated Disposal sites

ARCHIVO DE PROYECTOS TECNICOS

PRELIMINARY COST ESTIMATE	DATE PREPARED 10-Oct-01
CLIENT AUTORIDAD DEL CANAL DE PANAMA	CONSTRUCTION CONTRACT NO.
	ESTIMATED BY MOFFATT & NICHOL ENGINEERS
PROJECT TITLE PRE-FEASIBILITY STUDY FOR ARTIFICIAL ISLAND DEVELOPMENT TRANSPORTATION BY TRUCK TO ACP DISPOSAL AREAS	STATUS OF DESIGN Conceptual

Item	Quantity	Units	Unit Cost	Total
Costs Using Material Quantities from Channel Alignment P1				
General				
Mobilization and Demobilization	1	LS	$1,250,000.00	$1,250,000
Material Haulage				
Truck Transportation	87,381,000	m^3	$4.19	$366,102,640
Site Rehabilitation and Erosion Control				
Site Rehabilitation & Preparation	87,381,000	m^3	$0.21	$18,332,944
Total Cost - Haulage				***$385,685,584***
20% Contingencies				***$77,137,117***
Grand Total - P1				*$462,822,701*
Cost per cu. metre for Disposal				*$5.30*
Costs Using Material Quantities from Channel Alignment P2				
General				
Mobilization and Demobilization	1	LS	$1,250,000.00	$1,250,000
Material Haulage				
Truck Transportation	47,136,500	m^3	$4.18	$197,260,790
Site Rehabilitation and Erosion Control				
Site Rehabilitation & Preparation	47,136,500	m^3	$0.39	$18,332,944
Total Cost - Haulage				***$216,843,734***
20% Contingencies				***$43,368,747***
Grand Total - P2				*$260,212,481*
Cost per cu. metre for Disposal				*$5.60*

Panama - Artificial Island Pre-feasibility Study
PRELIMINARY COST ESTIMATE FOR TRUCK HAULAGE TO DISPOSAL AREAS (P1)

General Specifications

Item	Unit	Qty		Comments
Quantity Information				
Overburden Volume (Bulked by 1.30)	m^3	18,031,000		Volumes taken from Harza estimate
Rock Volume (Bulked by 1.25)	m^3	69,350,000		
Total Bulked Material Volume	m^3	87,381,000		Volumes taken from Harza estimate
Site/Work Specifications				
Average Round Trip Haul Distance	km	5.0		
Average Truck Speed	km/h	20.0		
Machine Pay Hours	hr	20		
Working Hours Per Day	hr	15.00		Working hours allows for 25% downtime compared with pay hours
Estimated Construction Time	days	2,190		6.4 Years
Target Daily Production Rate	m^3/day	40,000		Production rate estimate - input cell
Equipment Specifications				
CAT 789 Off-Road Truck				
Truck Capacity	m^3	105		
Estimated Load Time	hr	0.09		
Estimated Travel Time	hr	0.25		
Estimated Unload Time	hr	0.05		Time estimate - input cell
Total Cycle Time	hr	0.39		
Truck Trips Per 15 hour day	no.	39		
Daily Haul Per Truck	m^3	4,095		
Actual Haul	m^3	40,950		
Total Truck Trips to make target	no.	390		
Estimated no. required	no.	10		
Hourly Rate	$/hr		$331.45	Based on Harza Data w/ O/H, Taxes, Bonds and Profit Inclusive
Daily Rate @ 20 pay hours per day	$/day		$6,628.92	
Daily Rate for 10 trucks			$66,289.20	
CAT 5230 Front Shovel (17m^3 bucket)				
Bucket Capacity	m^3	17		
Bucket Fill Factor	no.	0.90		
Actual Bucket Capacity	m^3	15.3		
Bucket Cycle Time (dig to load)	min	0.765		
Bucket Cycle Time (dig to load)	hr	0.013		
Hourly Loading Rate Per Front Shovel	m^3/hr	1,200		Based on Harza Estimate
Daily Loading Rate Per Front Shovel	m^3/day	18,000		
Estimated no. required	no.	6		
Hourly Rate	$/hr		$592.95	Based on Harza Data w/ O/H, Taxes, Bonds and Profit Inclusive
Daily Rate @ 20 pay hours per day	$/day		$11,858.94	
Daily Rate for 6 shovels			$71,153.66	
Preparation of Haul Roads				
No. Disposal Sites	no.	6		ACP estimate
Total Length of Haul Roads	km	20		
Earthworking at Disposal Sites				
CAT D-9 Bulldozer				
Hourly Working Rate Per Dozer	m^3/hr	1,000		Estimate - input cell
Daily Working Rate Per Dozer	m^3/day	15,000		
Estimated no. required	no.	6		
Hourly Rate	$/hr		$213.99	Based on Harza Data w/ O/H, Taxes, Bonds and Profit Inclusive
Daily Rate	$/day		$4,279.86	
Daily Rate for 6 dozers			$25,679.18	
CAT 16H Grader				
Estimated no. required	no.	2		Input Cell
Hourly Rate	$/hr		$101.20	Based on Harza Data w/ O/H, Taxes, Bonds and Profit Inclusive
Daily Rate	$/day		$2,024.05	
Daily Rate for 2 graders			$4,048.10	

Estimated Project Costs

Item	Unit	Qty	Price/Rate	Total	Comments
Equipment Costs					
CAT 789 Off-Road Trucks	day	2,190	$66,289	$145,173,350	
CAT 5230 Front Shovels	day	2,190	$71,154	$155,826,530	
CAT D-9 Bulldozers	day	2,190	$25,679	$56,237,420	
CAT 16H Graders	day	2,190	$4,048	$8,865,340	
Total Equipment Cost				**$366,102,640**	
Total Cost - Haulage to Disposal Areas				$366,102,640	
Unit Cost - Haulage				$4.19	
Disposal Site Rehabilitation & Preparation					
Final Grading, Topsoil, Planting, Trees					
Area W1	m^2	1,553,801	$ 1.00	$ 1,553,801.00	
Area W2	m^2	430,805	$ 1.00	$ 430,805.00	
Area W3	m^2	1,026,049	$ 1.00	$ 1,026,049.00	
Area W4	m^2	90,268	$ 1.00	$ 90,268.00	
Area W5	m^2	199,897	$ 1.00	$ 199,897.00	
Area W6	m^2	254,476	$ 1.00	$ 254,476.00	
Site Offices & Working area (inc maintenance)				$ 2,500,000.00	
Site Clearance	ha	356	$ 5,000.00	$ 1,777,648.00	
Haul Road (prepare & maintain)	km	20	$ 400,000.00	$ 8,000,000.00	
Erosion control & Monitoring	LS			$ 2,500,000.00	
Total Cost - Site Rehabilitation				$18,332,944	
Unit Cost - Rehab/Site Preparation				$0.21	

Panama - Artificial Island Pre-feasibility Study
PRELIMINARY COST ESTIMATE FOR TRUCK HAULAGE TO DISPOSAL AREAS (P2)

General Specifications

Item	Unit	Qty		Comments
Quantity Information				
Overburden Volume (Bulked by 1.30)	m^3	9,724,000		Volumes taken from Harza estimate
Rock Volume (Bulked by 1.25)	no.	37,412,500.00		Volumes taken from Harza estimate
Total Bulked Material Volume	m^3	47,136,500		Volumes taken from Harza estimate
Site/Work Specifications				
Average Round Trip Haul Distance	km	5.0		
Average Truck Speed	km/h	20.0		
Machine Pay Hours	hr	20		
Working Hours Per Day	hr	15.0		Working hours allows for 25% downtime compared with pay hours
Estimated Construction Time	days	1,180		3.5 Years
Target Daily Production Rate	m^3/day	40,000		Production rate estimate - input cell
Equipment Specifications				
CAT 789 Off-Road Truck				
Truck Capacity	m^3	105		
Estimated Load Time	hr	0.09		
Estimated Travel Time	hr	0.25		
Estimated Unload Time	hr	0.05		Time estimate - input cell
Total Cycle Time	hr	0.39		
Truck Trips Per Day	no.	39		
Daily Haul Per Truck	m^3	4,095		
Actual Haul	m^3	40,950		
Total Truck Trips	no.	390		
Estimated no. required	no.	10		
Hourly Rate	$/hr		$331.45	Based on Harza Data w/ O/H, Taxes, Bonds and Profit Inclusive
Daily Rate	$/day		$6,628.92	
Daily Rate for 10 trucks			$66,289.20	
CAT 5230 Front Shovel (17m^3 bucket)				
Bucket Capacity	m^3	17		
Bucket Fill Factor	no.	0.90		
Actual Bucket Capacity	m^3	15.3		
Bucket Cycle Time (dig to load)	min	0.765		
Bucket Cycle Time (dig to load)	hr	0.013		
Hourly Loading Rate Per Front Shovel	m^3/hr	1,200		Based on Harza Estimate
Daily Loading Rate Per Front Shovel	m^3/day	18,000		
Estimated no. required	no.	6		
Hourly Rate	$/hr		$592.95	Based on Harza Data w/ O/H, Taxes, Bonds and Profit Inclusive
Daily Rate	$/day		$11,858.94	
Daily Rate for 6 shovels			$71,153.66	
Preparation of Haul Roads				
No. Disposal Sites	no.	6		ACP estimate
Total Length of Haul Roads	km	20		
Earthworking at Disposal Sites				
CAT D-9 Bulldozer				
Hourly Working Rate Per Dozer	m^3/hr	1,000		Estimate - input cell
Daily Working Rate Per Dozer	m^3/day	15,000		
Estimated no. required	no.	6		
Hourly Rate	$/hr		$213.99	Based on Harza Data w/ O/H, Taxes, Bonds and Profit Inclusive
Daily Rate	$/day		$4,279.86	
Daily Rate for 6 dozers			$25,679.18	
CAT 16H Grader				
Estimated no. required	no.	2		Input Cell
Hourly Rate	$/hr		$101.20	Based on Harza Data w/ O/H, Taxes, Bonds and Profit Inclusive
Daily Rate	$/day		$2,024.05	
Daily Rate for 2 graders			$4,048.10	

Estimated Project Costs

Item	Unit	Qty	Price/Rate	Total	Comments
Equipment Costs					
CAT 789 Off-Road Trucks	day	1,180	$66,289	$78,221,260	
CAT 5230 Front Shovels	day	1,180	$71,154	$83,961,330	
CAT D-9 Bulldozers	day	1,180	$25,679	$30,301,440	
CAT 16H Graders	day	1,180	$4,048	$4,776,760	
Total Equipment Cost				**$197,260,790**	
Total Cost - Haulage to Disposal Areas				$197,260,790	
Unit Cost - Haulage				$4.18	
Disposal Site Rehabilitation & Preparation					
Final Grading, Topsoil, Planting, Trees					
Area W1	m^2	1,553,801	$ 1.00	$ 1,553,801.00	
Area W2	m^2	430,805	$ 1.00	$ 430,805.00	
Area W3	m^2	1,026,049	$ 1.00	$ 1,026,049.00	
Area W4	m^2	90,268	$ 1.00	$ 90,268.00	
Area W5	m^2	199,897	$ 1.00	$ 199,897.00	
Area W6	m^2	254,476	$ 1.00	$ 254,476.00	
Site Offices & Working area (inc maintenance)				$ 2,500,000.00	
Site Clearance	ha	356	$ 5,000.00	$ 1,777,648.00	
Haul Road (prepare & maintain)	km	20	$ 400,000.00	$ 8,000,000.00	
Erosion control & Monitoring	LS			$ 2,500,000.00	
Total Cost - Site Rehabilitation				$18,332,944	
Unit Cost - Rehab/Site Preparation				$0.39	

E RAIL VERTICAL ALIGNMENT

Terrain models taken from ACP topographic files were used to derive the horizontal and vertical alignments of the rail, highway and conveyor system connections to the project site from the excavation area.

The vertical alignment for the recommended rail system is presented in this appendix.

DWG INFO: P:\HORTON FILES\PANAMA\4594-02 - ARTIFICIAL ISLAND\60 - CADD\FIG RAIL PROFILE-APPENDIX.DWG; NOV 09 2001 - 02:03 PM; JMACPHERSON; XREF'S; (C) MOFFATT AND NICHOL ENGINEERS

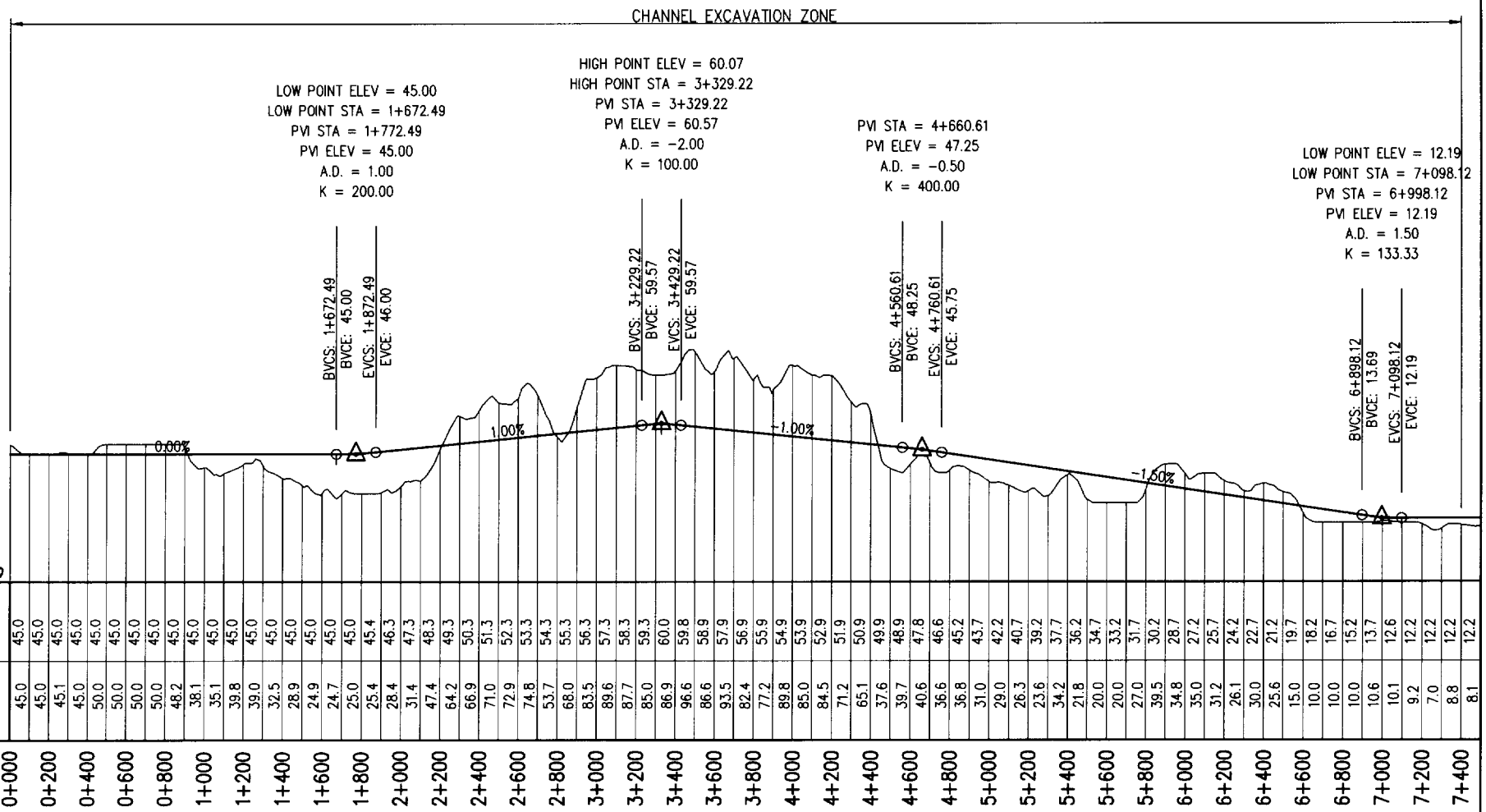

	0+000	0+200	0+400	0+600	0+800	1+000	1+200	1+400	1+600	1+800	2+000	2+200	2+400	2+600	2+800	3+000	3+200	3+400	3+600	3+800	4+000	4+200	4+400	4+600	4+800	5+000	5+200	5+400	5+600	5+800	6+000	6+200	6+400	6+600	6+800	7+000	7+200	7+400
PROPOSED ELEVATION	45.0	45.0	45.0	45.0	45.0	45.0	45.0	45.0	45.0	45.0	45.0	45.0	45.0	45.0	45.0	45.0	45.0	46.3	47.3	48.3	49.3	50.3	51.3	52.3	53.3	54.3	55.3	56.3	57.3	58.3	59.3	60.0	59.8	58.9	57.9	56.9	55.9	54.9	53.9	52.9
EXISTING ELEVATION	45.0	45.0	45.1	45.0	50.0	50.0	50.0	48.2	38.1	35.1	39.8	39.0	32.5	28.9	24.9	24.7	25.0	25.4	28.4	31.4	47.4	64.2	66.9	71.0	72.9	74.8	53.7	68.0	83.5	89.6	87.7	85.0	86.9	96.6	86.6	93.5	82.4	77.2	89.8	85.0

	0+000	0+200	0+400	0+600	0+800	1+000	1+200	1+400	1+600	1+800	2+000	2+200	2+400	2+600	2+800	3+000	3+200	3+400	3+600	3+800	4+000	4+200	4+400	4+600	4+800	5+000	5+200	5+400	5+600	5+800	6+000	6+200	6+400	6+600	6+800	7+000	7+200	7+400
PROPOSED ELEVATION	49.9	48.9	47.8	46.6	45.2	43.7	42.2	40.7	39.2	37.7	36.2	34.7	33.2	31.7	30.2	28.7	27.2	25.7	24.2	22.7	21.2	19.7	18.2	16.7	15.2	13.7	12.6	12.2	12.2	12.2	12.2
EXISTING ELEVATION	37.6	39.7	40.6	36.6	36.8	31.0	29.0	26.3	23.6	34.2	21.8	20.0	20.0	27.0	39.5	34.8	35.0	31.2	26.1	30.0	25.6	15.0	10.0	10.0	10.0	10.6	10.1	9.2	7.0	8.8	8.1

NOTE: PROFILES ARE BASED ON DIGITAL TOPOGRAPHY PROVIDED BY ACP. GROUND SURFACE ELEVATIONS IN HEAVILY VEGETATED AREAS WILL NOT BE TRULY REPRESENTATIVE OF ACTUAL SURFACE CONDITIONS. AS SUCH, EXISTING SURFACE INFORMATION IS USED ONLY FOR CONCEPTUAL DESIGN PURPOSES AND SHOULD NOT BE USED FOR CONSTRUCTION.

PRELIMINARY LONGITUDINAL RAIL PROFILE – PART 1

DWG INFO: P:\HORTON FILES\PANAMA\4594-02 - ARTIFICIAL ISLAND\60 - CADD\FIG RAIL PROFILE-APPENDIX.DWG; NOV 09 2001 - 02:03 PM; JMACPHERSON; XREF'S: (C) MOFFATT AND NICHOL ENGINEERS

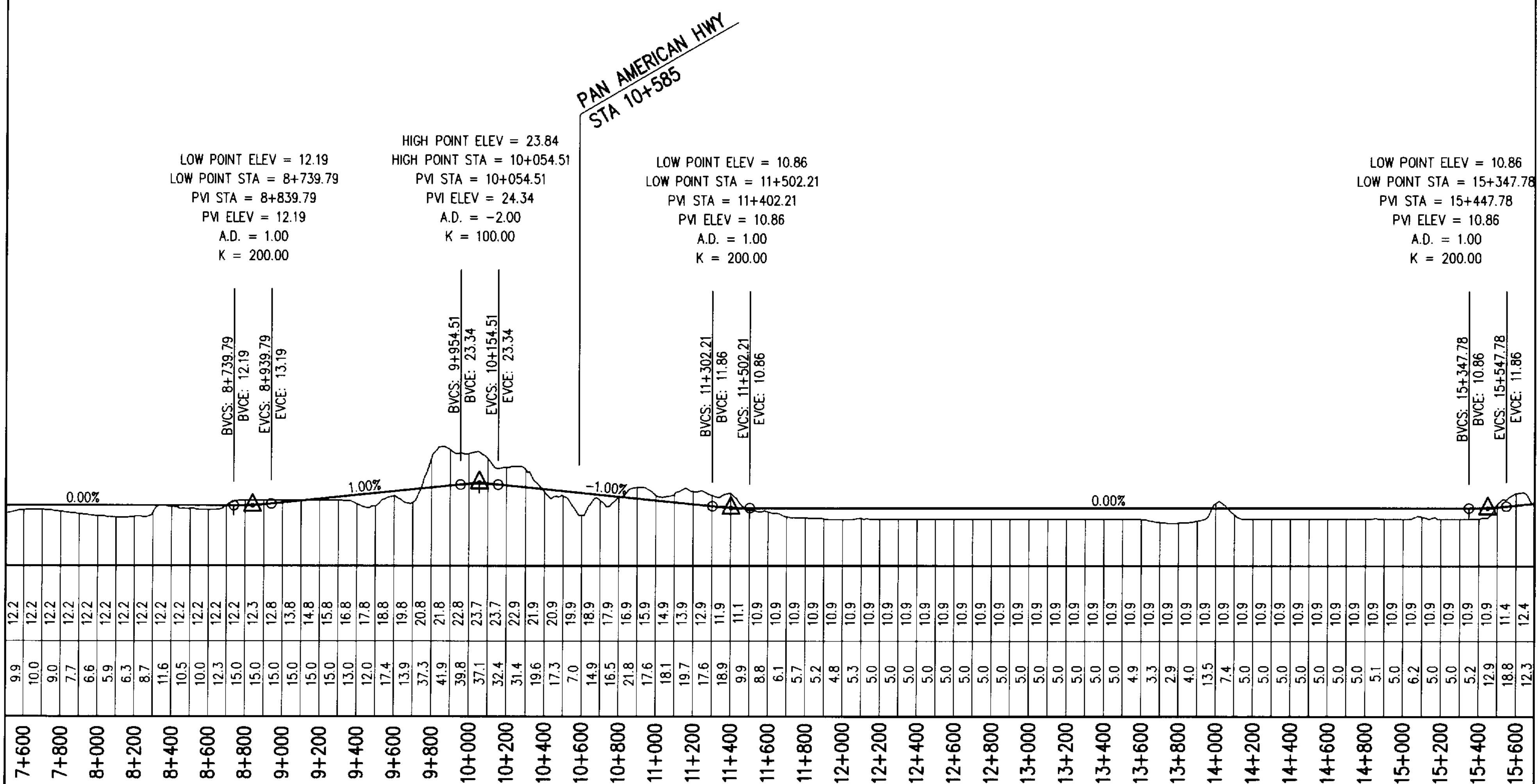

PRELIMINARY LONGITUDINAL RAIL PROFILE – PART 2

DWG INFO: P:\HORTON FILES\PANAMA\4594-02 – ARTIFICIAL ISLAND\60 – CADD\FIG RAIL PROFILE-APPENDIX.DWG; NOV 09 2001 – 02:03 PM; JMACPHERSON; XREF'S; (C) MOFFATT AND NICHOL ENGINEERS

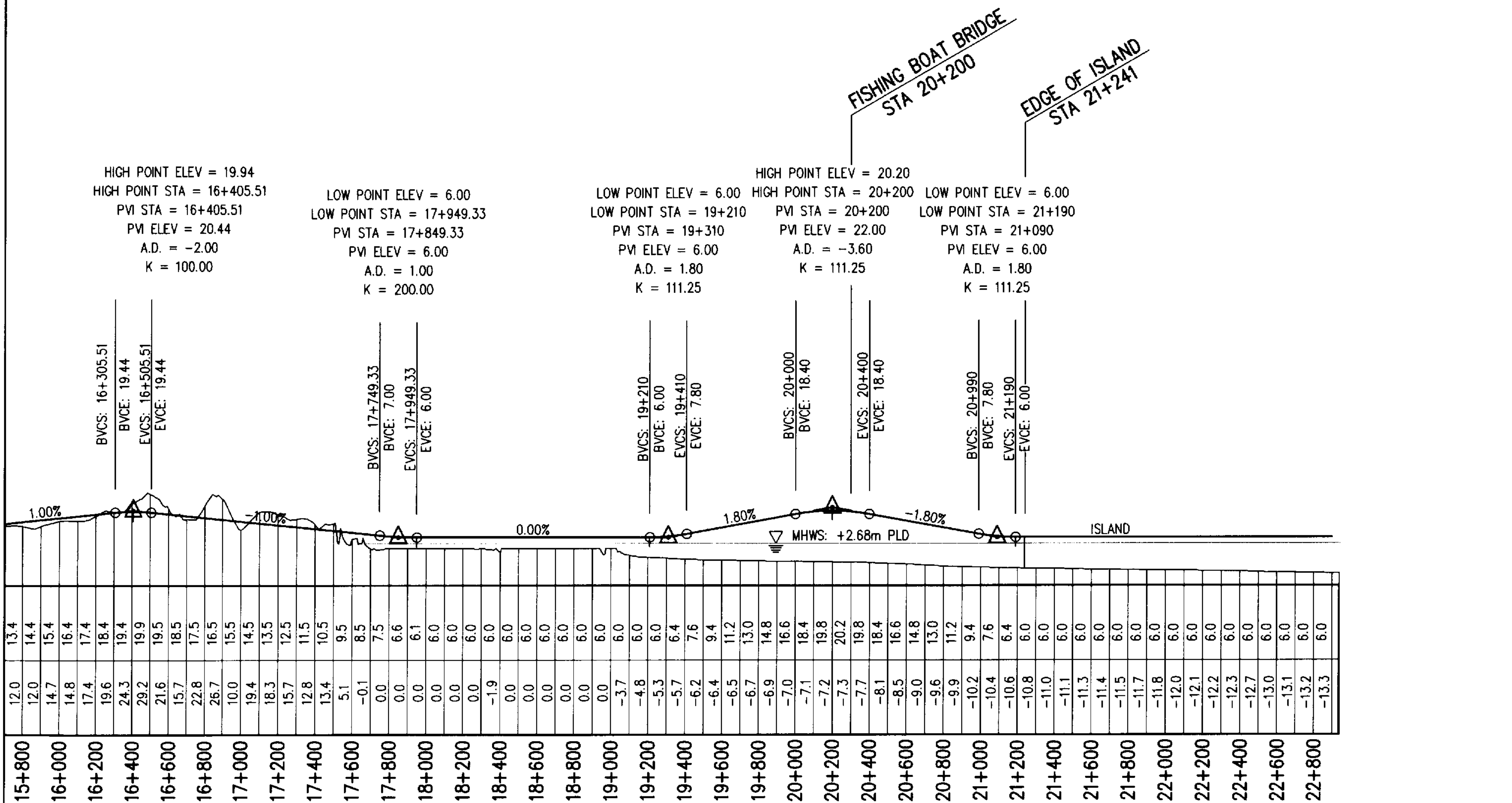

PRELIMINARY LONGITUDINAL RAIL PROFILE – PART 3

F References – Wave Study

The following references were used to estimate the wave design criteria presented in Section 9.6 of the Main report:

1 Naval Weather Service Command, U.S. Navy Marine Climatic Atlas of the World, Volume V, South Pacific Ocean, October 1979.

2 United Kingdom (UK) Construction Industry Research and Information Association and the Netherlands Centre for Civil Engineering Research and Codes (CIRIA/CUR). 1991. Manual on the Use of Rock in Coastal and Shoreline Engineering. CIRIA Special Publication 83, London CUR Report 154, The Netherlands.

3 U.S. Army Corps of Engineers (USACE), Waterways Experiment Station (WES), Coastal Engineering Research Center (CERC). 1984. Shore Protection Manual, Volumes I and II. Fourth Edition. U.S. Government Printing Office.

4 Van der Meer, J.W. 1988. Rock Slopes and Cravel Beaches Under Wave Attack. Doctoral Thesis, Delft University of Technology.

5 Van der Meer, J. W. 1992. Wave Runup and Overtopping on Coastal Structures. *Journal of Coastal Engineering.*

G Data Listing

Data supplied by ACP and collected from sources during the preparation of this study is listed in the table below:

Date Recd	Information Date	Type	Format	Title	Source	Comments
8-May-01	20-Oct-01	Plan	e-file	Master Capacity.dwg	ACP	Project Template
28-Jun-01	20-Jul-99	Section	Hardcopy	The Panama Canal Clearance Diagram	ACP	Lock and Water Elevations for Atlantic and Pacific side, locks
28-Jun-01	15-Jan-01	Plan	Hardcopy	Alignment P1 & P2, Pacific Area	ACP	3rd Locks Alignment & Borehole locations
28-Jun-01	24-May-01	Plan	Hardcopy	Alinimiento P1 & P2 - Sector Pacifico, Mapa Geologica	ACP	Geologic information along 3rd Lock alignments
28-Jun-01	undated	Note	Hardcopy	Geologic Description Pacific Entrance Alternatives P1 and P2	ACP	Written description of geology
28-Jun-01	3-Aug-00	Spreadsheet	Hardcopy	Summary of Excavation Quantities Alignments P1 and P2	Harza	Dredging and excavation volume calcs
28-Jun-01	23-Aug-00	Report Xtract	Hardcopy	Quantity Takeoffs for Phased Canal Excavation	Harza	Summary of Dredging & Excn Vols
28-Jun-01	undated	Spreadsheet	Hardcopy	Pacific Entrance Deepening volume calcs	ACP?	Dredge computations for ship drafts of 46 and 50 ft.
28-Jun-01	7-May-01	Plan	Hardcopy	Localizacion de Sitios para deposito de Materiales de Dragado y excavacion	ACP	4 drawings Groups A, B, C and D
28-Jun-01	undated	Plan	Hardcopy	Sitios de Disposicion de Material de Dragado, Entrada del Pacifico	ACP, CCPO	Designated Dredged disposal sites

28-Jun-01	22-Jun-01	Spreadsheet	Hardcopy	Disposal Sites in Panama Canal Pacific Entrance	ACP	Areas and remaining capacity
28-Jun-01	26-Nov-99	Sections	Hardcopy	Seismic Survey Panama Canal, Buoy 1 - 21	Coastal and Inland Marine Services Inc	4 Sections showing estimated rock levels
28-Jun-01	undated	Photos	e-file	Panama Pacific Coast Lock Alignment Photos	ACP	Oblique air photos of Miraflores area
16-Jul-01		Minutes	e-file	Workshop Session 4 - Island alternatives	ACP	Brainstorm session on materials placement alternatives (locations)
20-Jul-01	27-Aug-98	Nav Chart	Hardcopy	Chart 1929 Gulf of Panama	UK Admiralty	Nav chart of Panama Bay
20-Jul-01	27-Feb-97	Nav Chart	Hardcopy	Chart 1401 Southern Approaches to the Panama Canal	UK Admiralty	Nav Chart - Canal entrance & Balboa
in-house	1-Jul-92	Report	Hardcopy	Operating Characteristics and Capacity Evaluation Study, Phase 1 Final Report	TAMS	Report of Canal Capacity needs. Includes WEFA transit projections to 2060
in-house	1-May-93	Report	Hardcopy	Operating Characteristics and Capacity Evaluation Study, Phase 2 Final Report	TAMS	Report of Canal Capacity needs. Includes capacity models & hydraulic analyses
23-Jul-01	23-Jul-01	Press	Hardcopy	APL Targets Latin America	Traffic World	Article on APL plans to expand service in Panama
1-Jun-01	1-Jun-01	Press	Hardcopy	Trans Panama Railroad opens in July	American Shipper	Announcement and growth projections for Pan Railroad traffic
23-Jul-01	23-May-01	Press	Hardcopy	Top Five commodities in Major US Trade Lanes	JOC	Piers commodity data on Imports and Exports over major trade lanes.
27-Jul-01	1-Nov-94	Report Xtract	Hardcopy	Informacion de Oleaje en la Bahia de Panama, para el Proyecto Punta Pacifica	ICA Ingenieria	Wave inormation - Panama Bay
27-Jul-01		Report Xtract	Hardcopy	Procedimiento Constructivo de las Islas Artificiales Punta Pacifica	ICA Ingenieria	Report of conditions - island project (Corredor Sur)
27-Jul-01		Report Xtract	Hardcopy	Comments on ICA report	M&N	Overview of report findings

27-Jul-01	22-Jun-01		Print	Tidal Information - Balboa	www.tides.com	Print from Tides application
27-Jul-01		Article	e-file	Panamas Canal Holds Vision of New Growth	ENR	Article on Canal Projects
27-Jul-01	1-Oct-79	Atlas	Hardcopy	US Navy Marine Climatic Atlas - Volume 5	US Navy	
3-Aug-01	12-Apr-01	Spreadsheet	Hardcopy	Investigacion de Sitio Tercer Juego de Esclusas	ACP	Point Load Test data
3-Aug-01	26-Jul-01	Report	Hardcopy	Study of Commercial Development Potential at Pacific Side of Canal	ACP	Quality Control/Quality Assurance Plan
3-Aug-01	1-Jun-97	Report	Hardcopy	The Study on the Development Plan of the Port of Balboa in the Republic of Panama	JICA	Final Report Summary
3-Aug-01	1-Jul-01	Photos	Hardcopy	Aerial Photographs	ACP	Amador 1, 3, 4; Farfan 1, 2; Balboa
3-Aug-01	5-Jul-01	Plan	e-file	Planta Con Colores De Formaciones	ACP	Geologic information along 3rd Lock alignments - Digital
16-Aug-01		Plan	e-file	Site Topography - Digital Files	ACP	3D-Contours
23-Aug-01	23-Mar-01	Spreadsheet	e-file	Resumen De Costos Unitarios De Los Trabajos De Dragado Y Excavation De La ACP	ACP	Unit Costs for Dredging & Excavation
29-Aug-01		Plan	e-file	Howard-Pedro Miguel-CAD.dwg	ACP	Ground Features